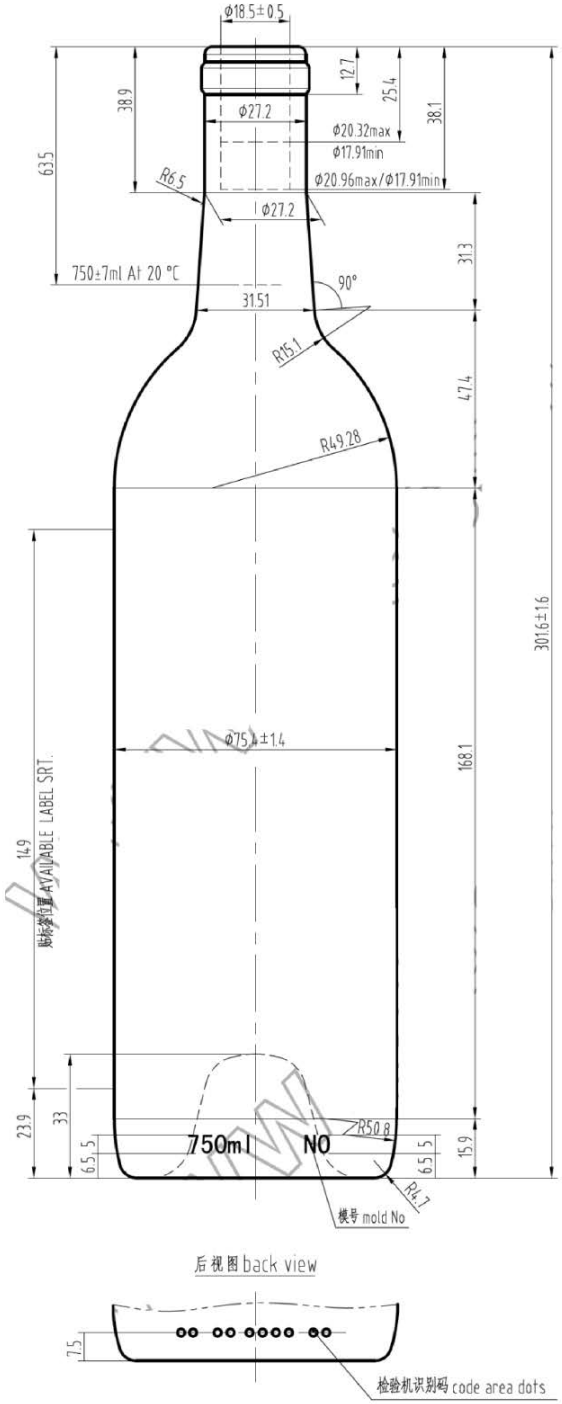

瓶口尺寸 FINISH(S 2/1)

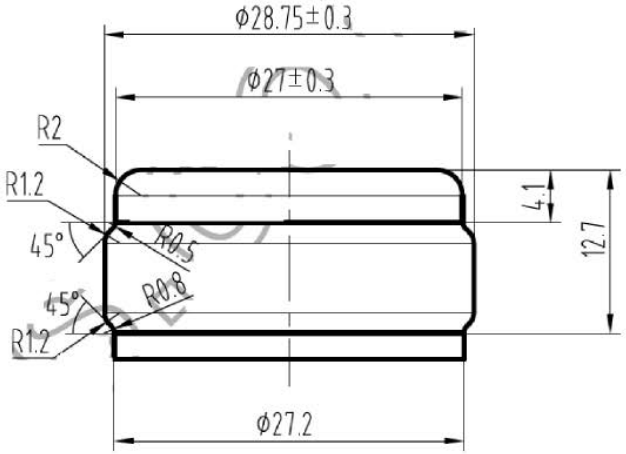

底视图 BOTTOM VIEW

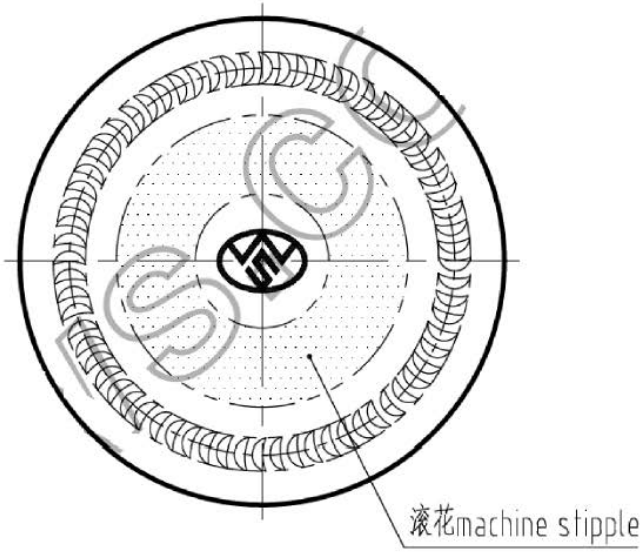

DISCLAIMER

THIS INFORMATION IS PROVIDED AS A GENERAL GUIDE, INCLUDING DIMENSIONS. IT IS THE CUSTOMER'S RESPONSIBILITIES TO SELECT THE PROPER CONTAINER FOR PRODUCT AND APPLICATION COMPATIBILITY.

DISTRIBUTED BY: Pipeline Packaging

REF NO.: DWG20043

DESCRIPTION: 750 ml Antique Wine Bordeaux, 27 mm Cork