KINGSTON

TO ORDER PARTS, CALL: 1-877-252-7277
www.kingstonbrass.com

VRTSQ673624,WG

67" Solid Surface White Stone Freestanding Tub with Pop-UP Drain

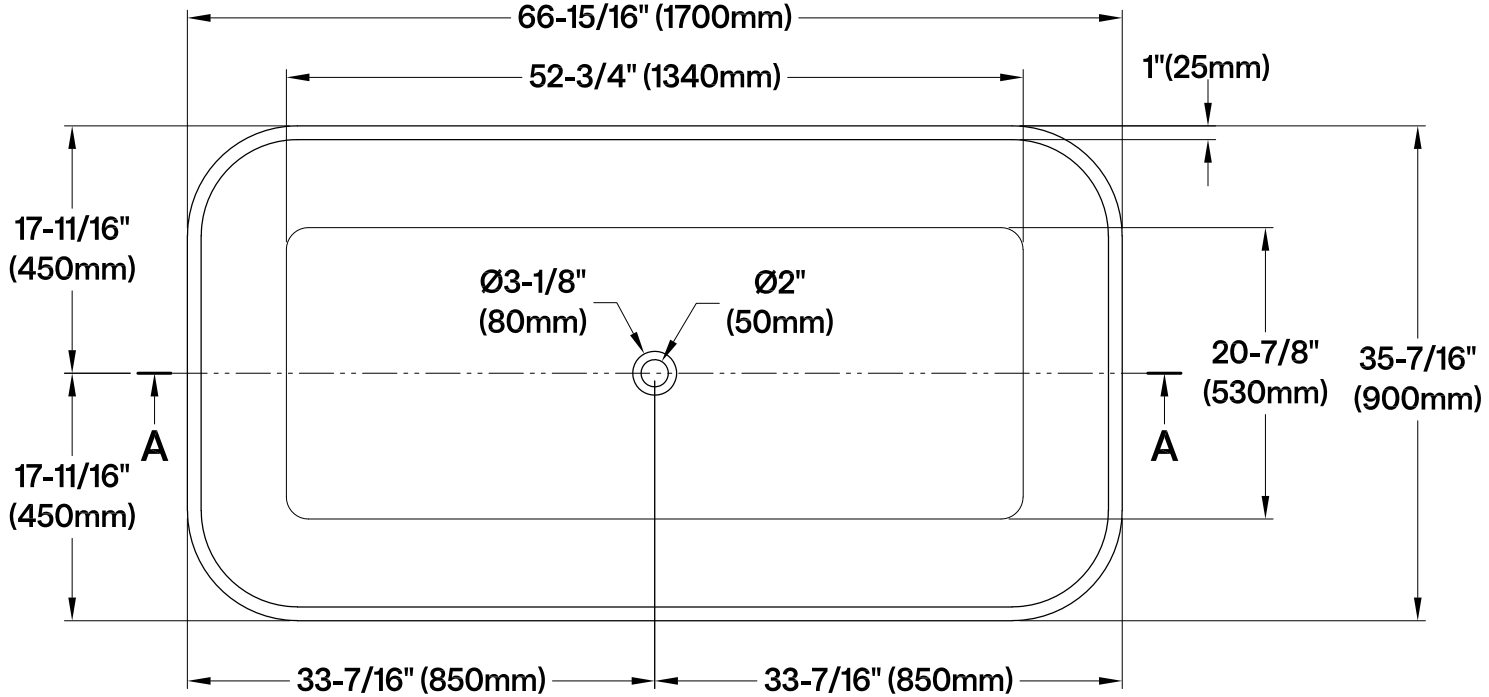

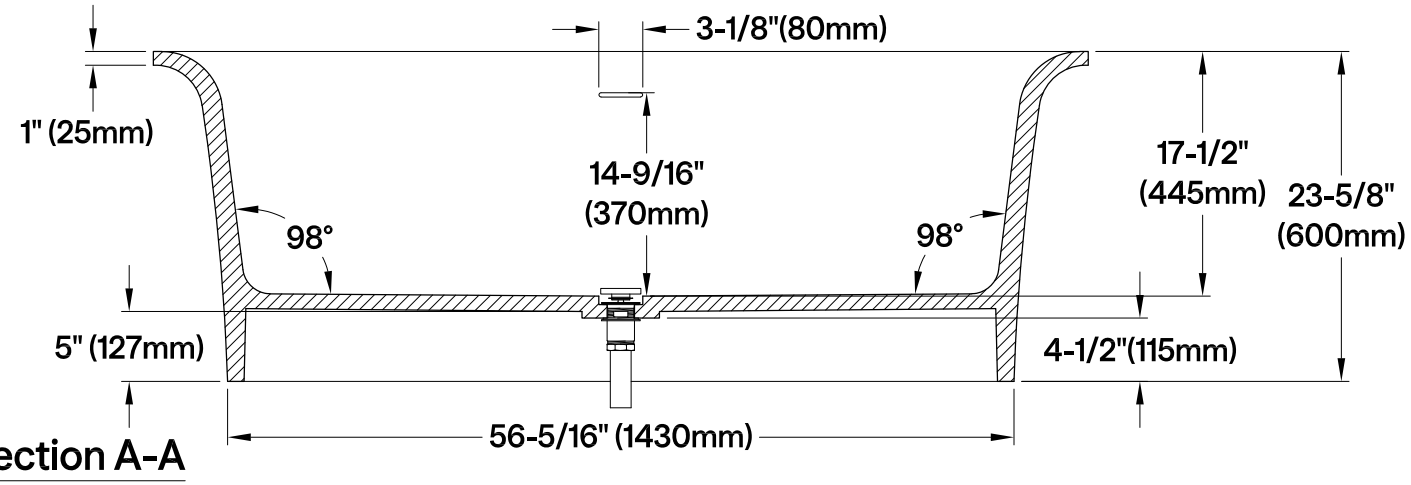

Section A-A