ORLEANS 2-DRAWER CONSOLE DESK ASSEMBLY INSTRUCTIONS

Thank you for purchasing the ORLEANS 2-DRAWER CONSOLE DESK

Please read the instructions carefully to ensure safe operation of this product.

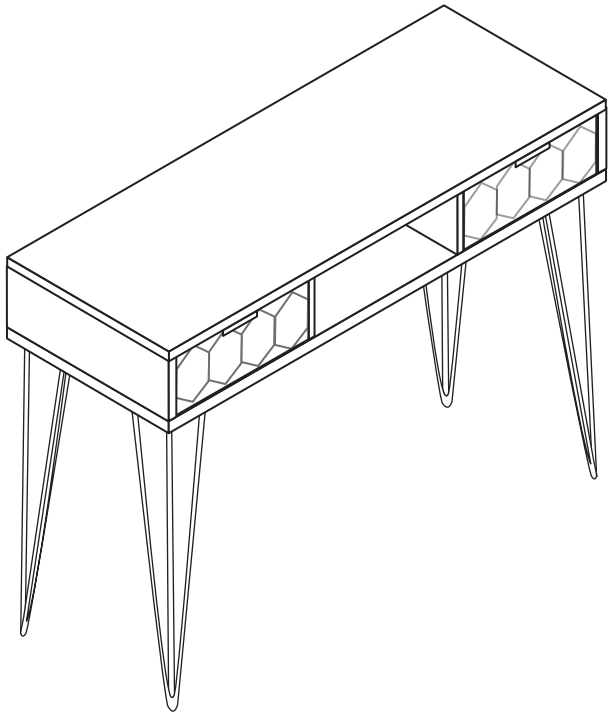

Size:115x39x79.5cm

Colour:Mango # G3104 K

PLEASE READ this sheet prior to assembly to familiarise yourself with the various stages of construction.

Carefully open the pack supplied and check the contents against the parts and fittings check list. Do not destroy any of the packaging until you are certain that you have all the necessary parts for the assembly.

CAUTION: There are small components used in the construction of this unit. These loose items should be kept away from young children whilst assembling your unit to avoid the danger of choking.

Tools Required

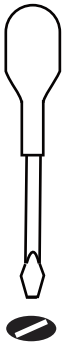

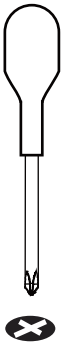

Number of people



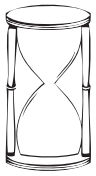

1 Hour
Set Up

IMPORTANT - READ CAREFULLY - RETAIN THESE INSTRUCTIONS FOR FUTURE REFERENCE.

INFORMATION

- This product is designed to hold 30Kg spread evenly over the whole unit.
- Do not exceed this weight.
- We recommend that this unit is assembled in the room intended for use.
- When you are ready to start, make sure that you have the right tools, plenty of space and a clean, dry area for assembly.
- Unwrap all packaging materials and place the components on top of the carton box or on a clean floor to prevent any accidental scratching.
- Check the pack and make sure you have all the parts listed.
- Ensure that this product is fully assembled as illustrated before use.
- Check all screws or bolts are tightened and inspect regularly
- Tools not included unless specified in parts list.

WARNINGS

- This product should only be used on a firm and level floor.
- Keep small parts out of reach of children.
- Make sure the legs remain in contact with the floor.
- DO NOT use power tools to construct this product.
- DO NOT tighten screws until all parts are assembled or as advised in this guide.
- DO NOT over-tighten screws or bolts.
- DO NOT use this product if parts are missing, damaged or worn.
- DO NOT sit or stand on the product.
- We recommend the use of the wall strap provided for safety reasons. N.B. Wall fixings suitable for a solid wall are included although the wall plugs provided may not be suitable for other type of wall such as hollow walls. Fixings suitable for your wall type must be obtained separately.
  If in doubt please consult a qualified trade person.
  Warning: Always ensure the area to be drilled is free from hidden electrical wires water and gas pipes
- DO NOT place hot or Warm objects on the surface as these may damage the Product . Always use a suitable heat resistant mat.

CARE INFORMATION

- Never use scourers, abrasives or chemical cleaners.
- To clean, wipe with a damp sponge and warm soapy water.
- Do not use solvent based cleaners or detergents as they can bleach or damage the product.

Parts and Fittings Checklist

Please check the pack contents before assembling the product. If any components are missing, please contact your retailer.

The fittings pack contains small items that should be kept away from children.

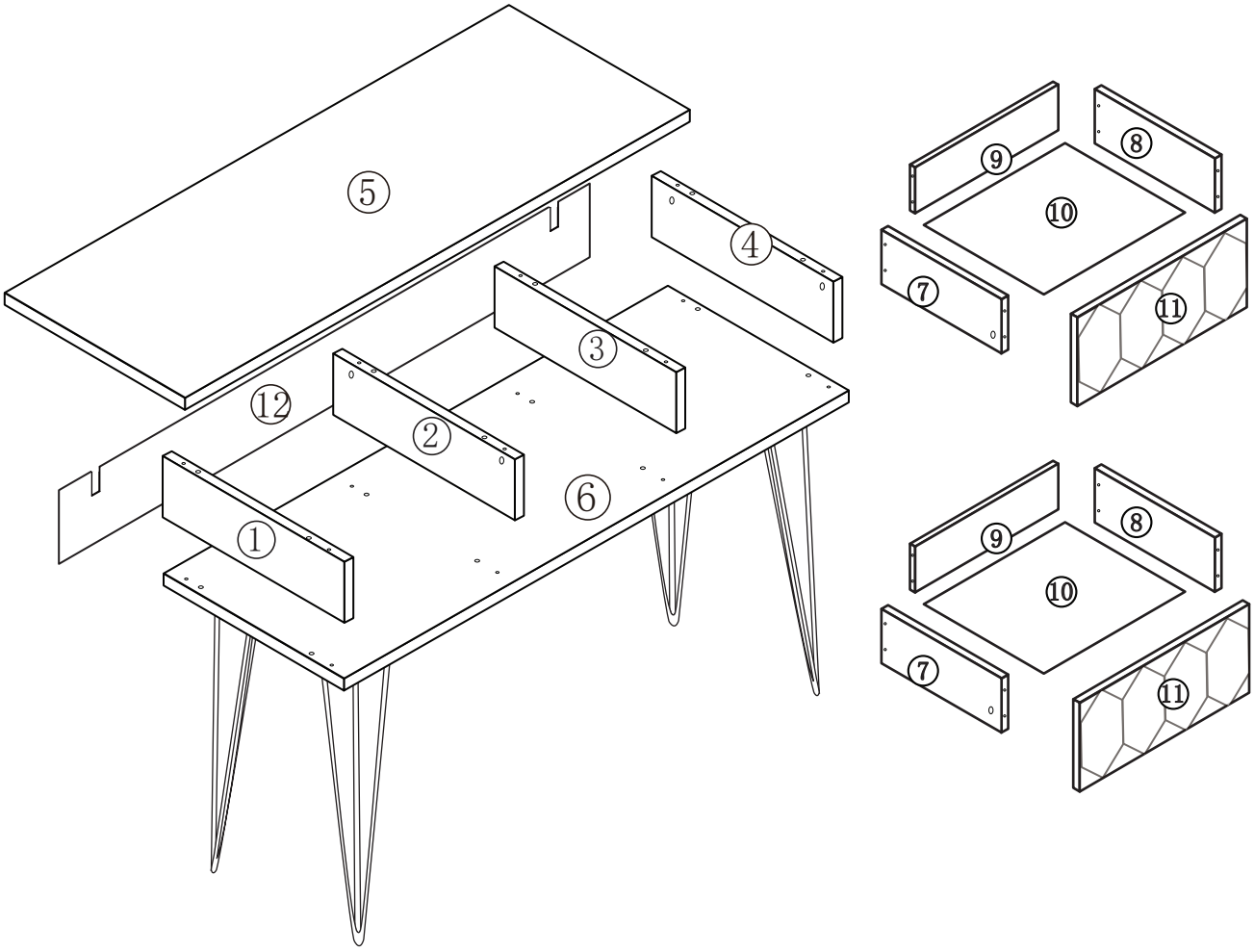

General Hints & Tips

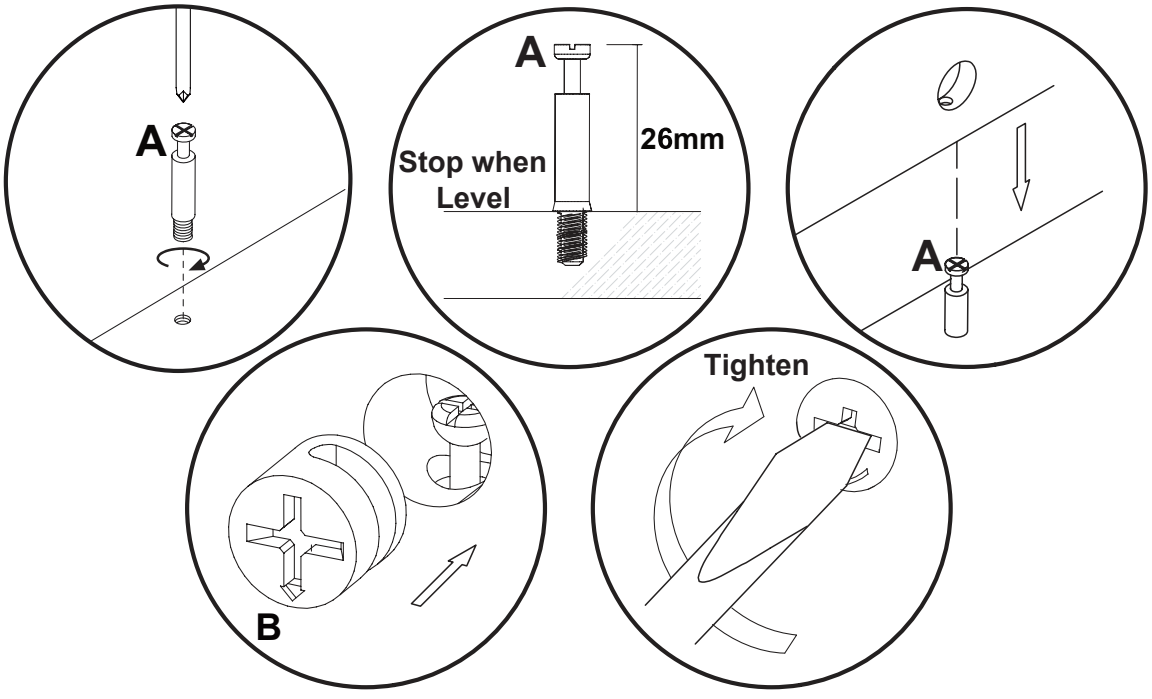

ORLEANS 2-DRAWER CONSOLE DESK ASSEMBLY INSTRUCTIONS

All parts are packed in one carton

1	2	3
Description: LEFT SIDE PANEL Qty: 1 Size: 388x167x15mm Carton No: 1/1	Description:CROSSING BAR -LEFT Qty: 1 Size: 388x167x15mm Carton No: 1/1	Description:CROSSING BAR-RIGHT Qty: 1 Size: 388x167x15mm Carton No: 1/1
4	5	6
Description: RIGHT SIDE PANEL Qty: 1 Size: 388x167x15mm Carton No: 1/1	Description: TOP PANEL Qty: 1 Size: 390x1150x15mm Carton No: 1/1	Description: BOTTOM PANEL Qty: 1 Size: 390x1150x15mm Carton No: 1/1
7	8	9
Description:DRAWER LEFT SIDE PANEL Qty: 2 Size: 110x330x15mm Carton No: 1/1	Description:DRAWER RIGHT SIDE PANEL Qty: 2 Size: 110x330x15mm Carton No: 1/1	Description:DRAWER BACK PANEL Qty: 2 Size: 110x305x15mm Carton No: 1/1
10	11	12
Description: DRAWER BOTTOM Qty: 2 Size: 324x314x2.7mm Carton No: 1/1	Description: DRAWER FRONT Qty: 2 Size: 353x160x15mm Carton No: 1/1	Description: BACK PANEL Qty: 1 Size: 195x1144x2.7mm Carton No: 1/1

Fittings (to scale)

Code	Item	Quantity
A	CAM BOLT (7x39mm)	12
B	CAM NUT	12
C	DOWEL (8x30mm)	24
D	SCREW (5x40mm)	12
F	SCREW (M3.5x14mm)	28
H	SCREW (M4x14mm)	20
J	SCREW (M3x16mm)	16

Fittings (not to scale)

Code	Item	Quantity
CR	CABINET RUNNER-RIGHT	2
CL	CABINET RUNNER-LEFT	2
DR	DRAWER RUNNER-RIGHT	2
DL	DRAWER RUNNER-LEFT	2
E	HANDLE	2
G	LEG	4
I	WALL FIXING	2

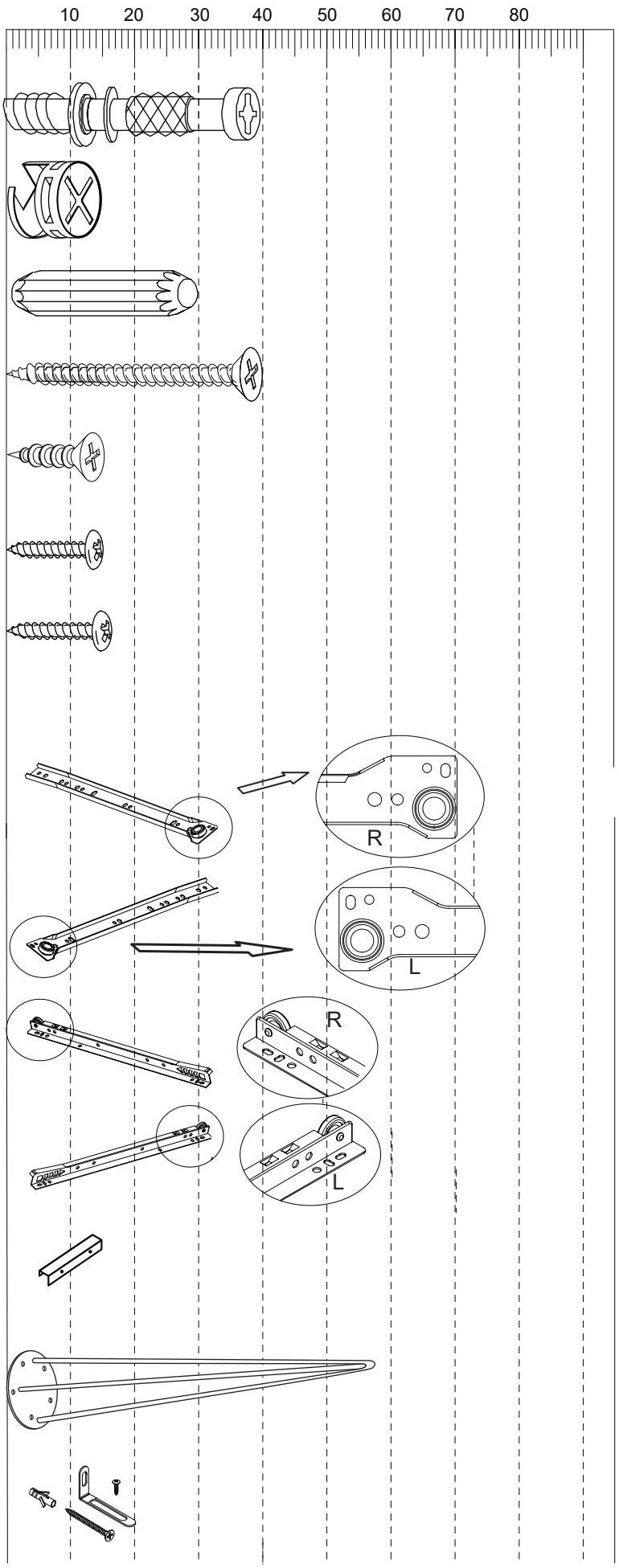

ORLEANS 2-DRAWER CONSOLE DESK ASSEMBLY INSTRUCTIONS

STEP 1

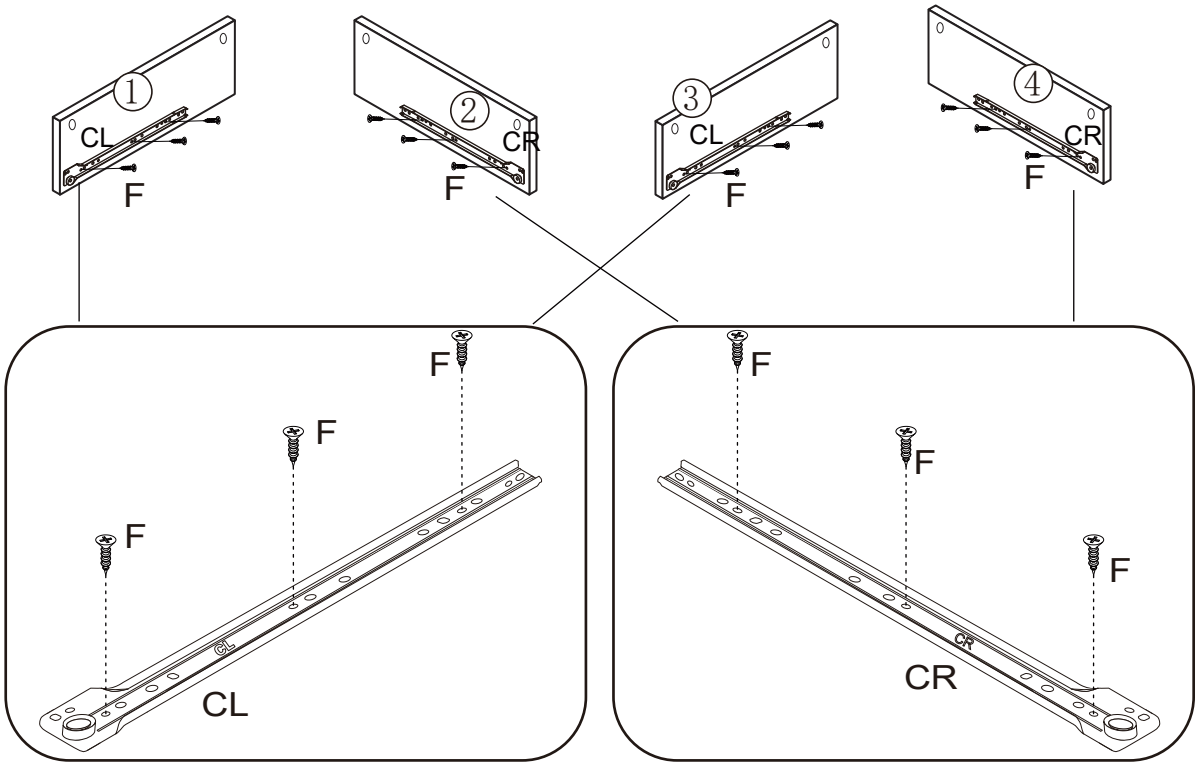

For this step:

Tools required

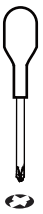

Fittings required

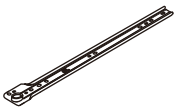

CLX2



CRX2



FX12

STEP 2

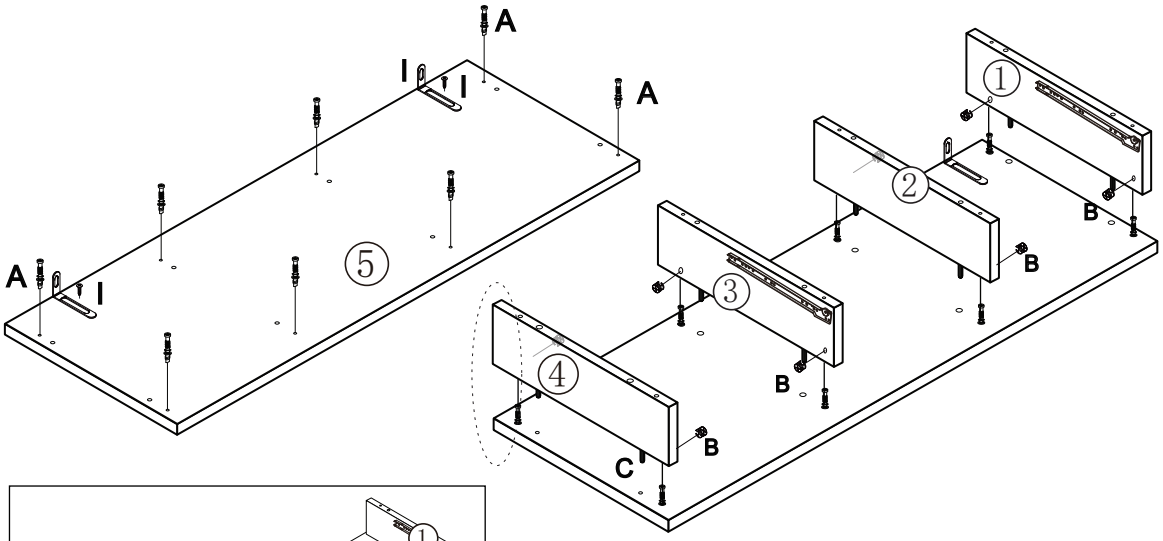

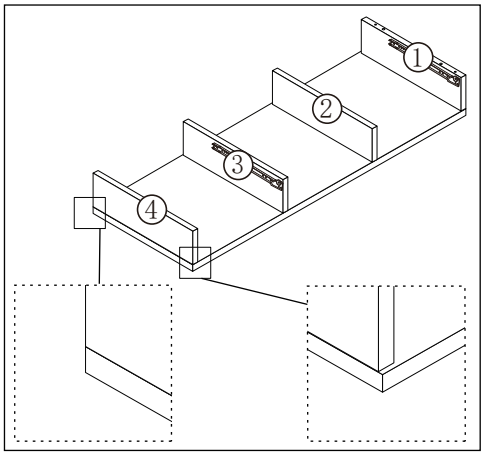

For this step:

Tools required

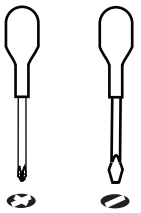

Fittings required



A x8



B x8

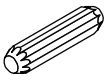

C x8



I x2

STEP 3

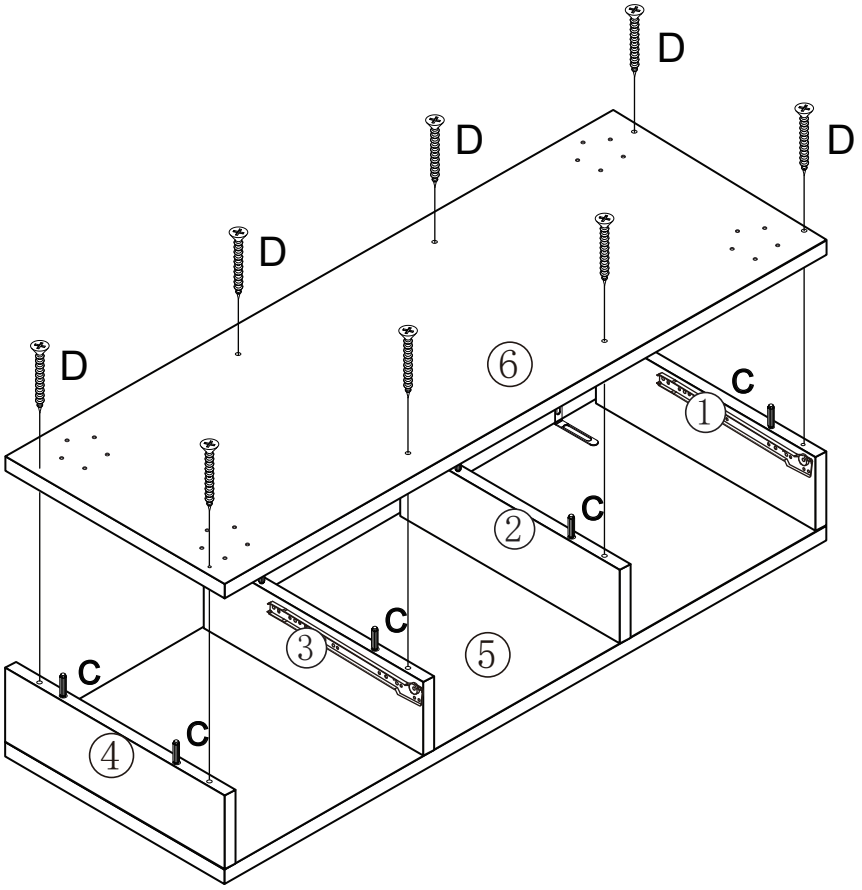

For this step:

Tools required



Fittings required

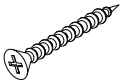

DX8



CX8

STEP 4

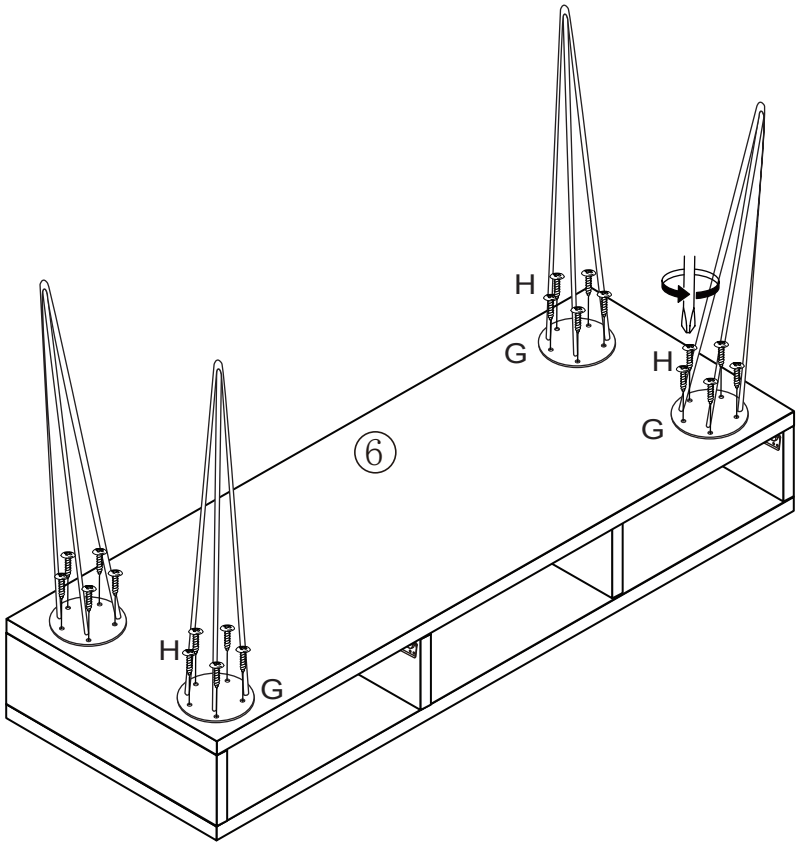

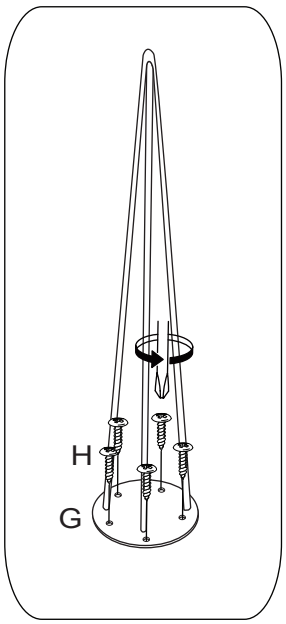

For this step:

Tools required

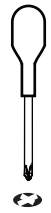

Fittings required

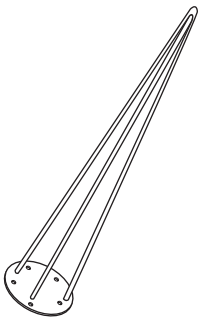

G x4



H x20

STEP 5

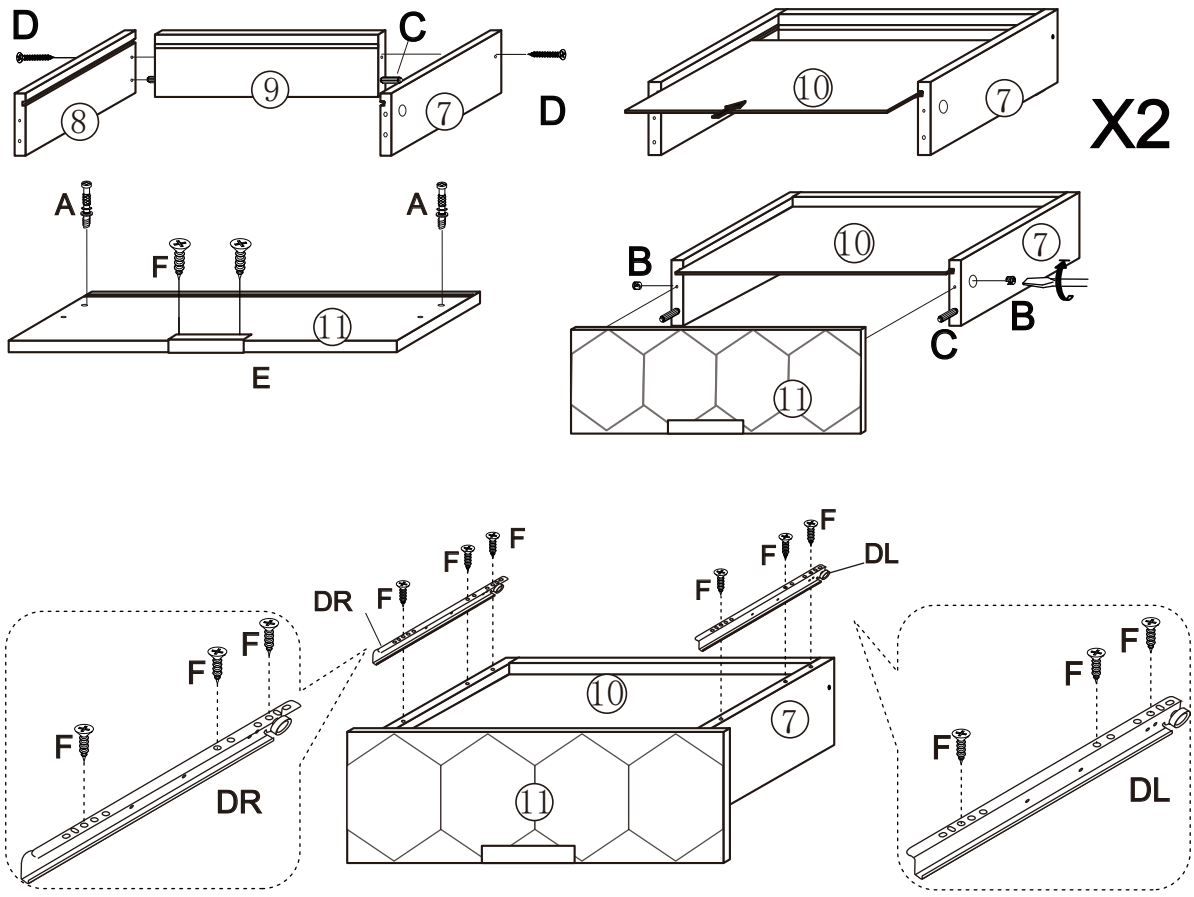

For this step:

Tools required

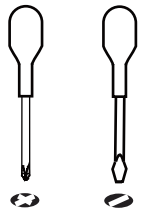

Fittings required

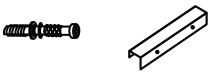

A x4 E x2



B x4 F x16



C x8 DL x2



D x4 DR x2

STEP 6

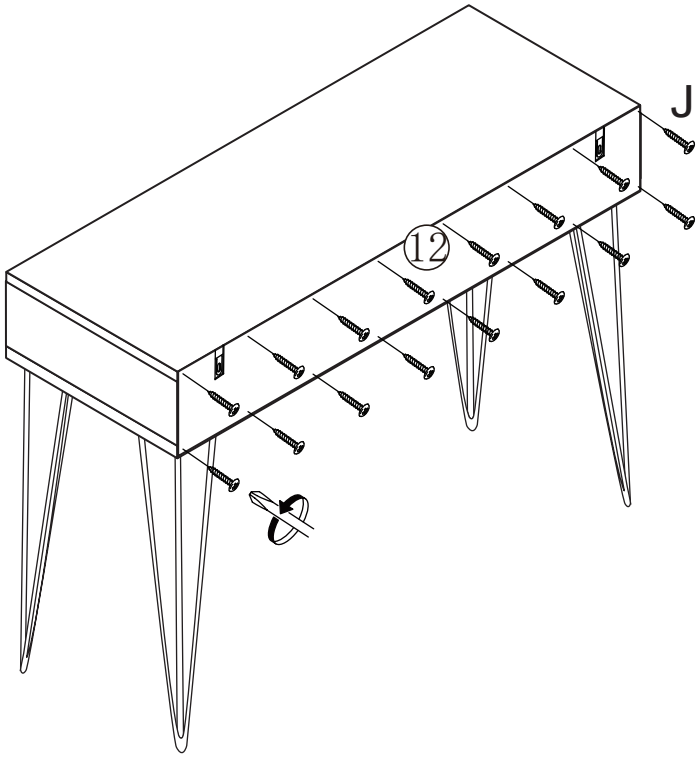

For this step:

Tools required

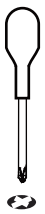

Fittings required



J x16

STEP 7

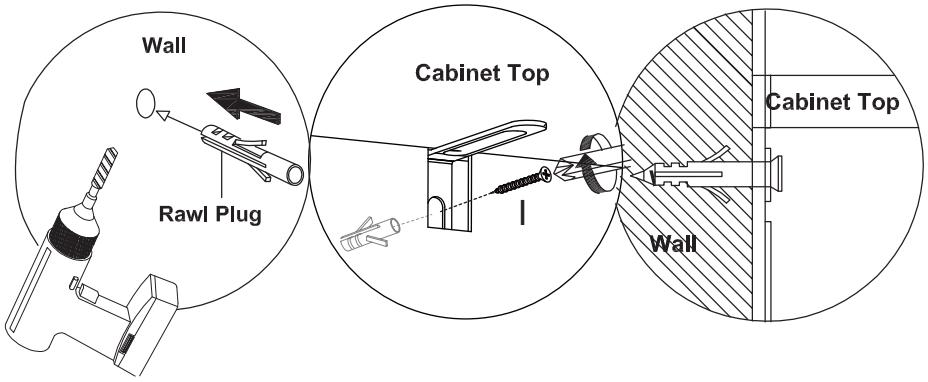

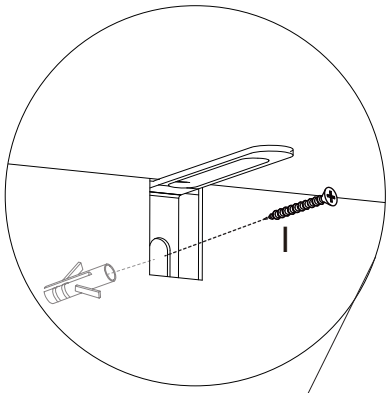

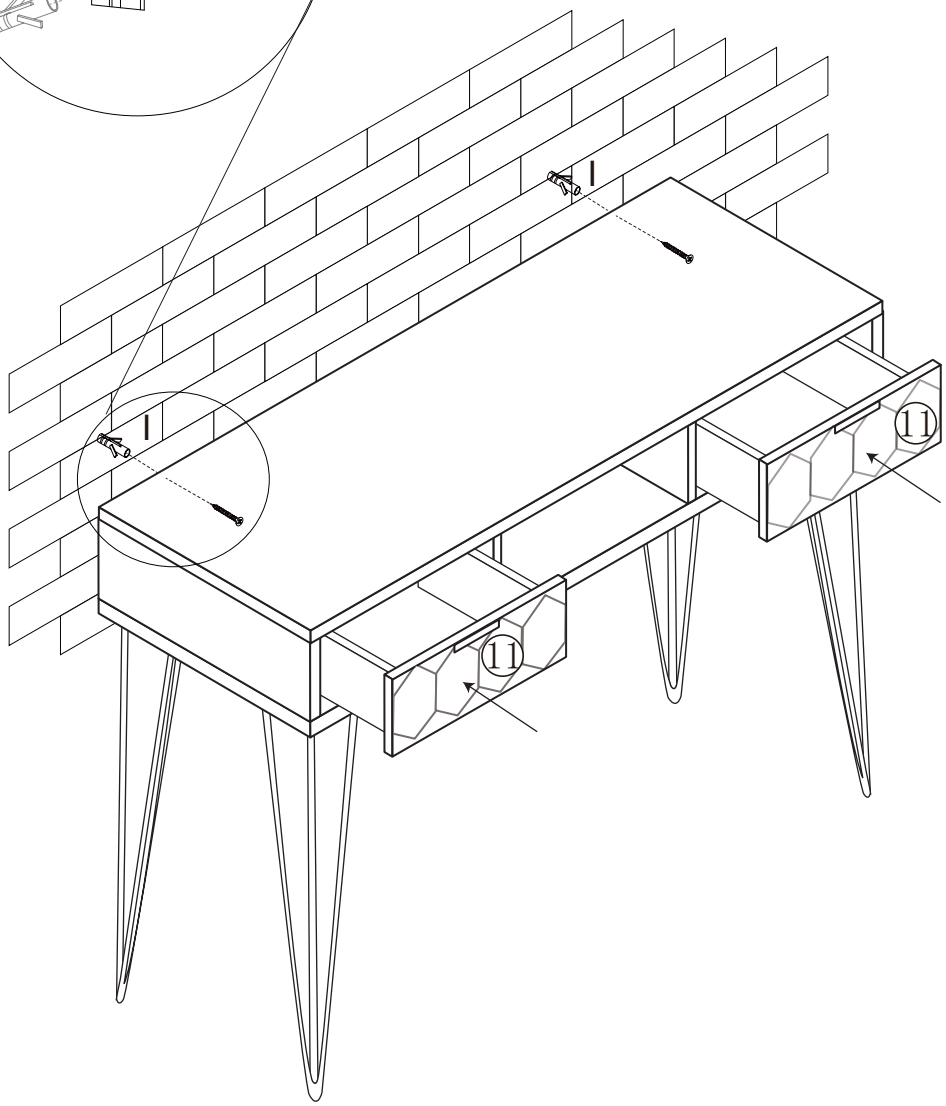

For this step:

Tools required

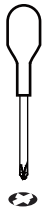

Fittings required

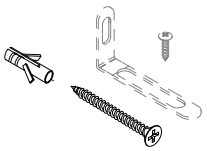

I x2

Assembly Completed

Your ORLEANS 2-DRAWER CONSOLE DESK is now completely assembled.
Periodically check to ensure that the components are in their proper position, free from damage.
Also, make sure the connectors are tight and secure.

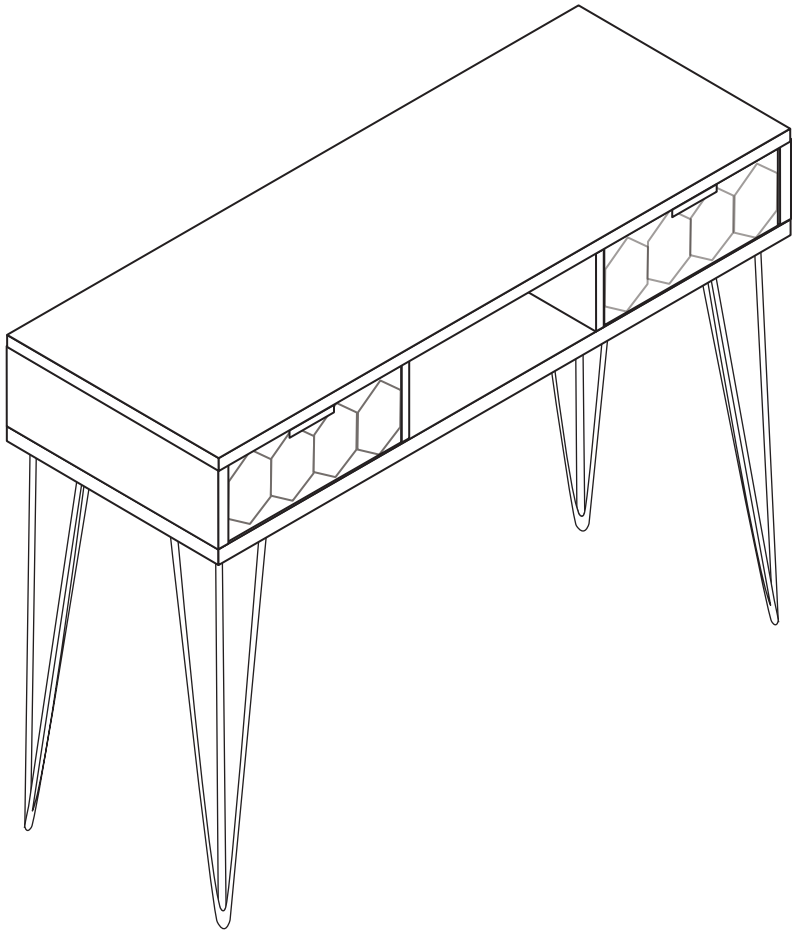

Keep instructions for future reference

