SYMMONS®

H321-V, H301-V Location:
Hand Shower/Slide Bar Assembly
Specification Submittal

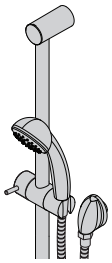

Model, H321-V

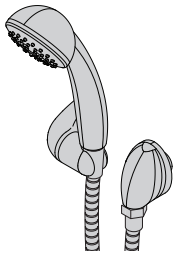

Model, H301-V

Model Numbers

☐	**H321-V**	Hand Shower with slide bar
☐	**H301-V**	Hand Shower without slide bar for mounting to the wall

Feature Highlights

- 1 mode hand shower unit.
- 2-3/4″ diameter.
- Dual checks for backflow protection.
- 30″ slide bar with cradle for hand shower mounting (model H321-V).
- Cradle for hand shower mounting (model H301-V).
- Standard flow rate is 2.0 gpm (7.6 L/min).
- Optional lower flow rate restrictor available.
- Polished Chrome finish (standard).

Options/Modifications

☐	1.5	1.5 gpm (5.7 L/min) flow restrictor
☐	STN	Satin Nickel finish
☐	72	72″ hose in place of 60″ hose
☐	MB	Matte Black finish
☐	BBZ	Brushed Bronze finish
☐	L2	Less hand shower wand

Note: Append appropriate -suffix to model number.

Compliance

- ASME A112.18.1/CSA B125.1.

C SA® US

Warranty

Limited Lifetime - for residential installations.
10 Years - for commercial/industrial installations.
Refer to www.symmons.com/warranty for complete warranty information.

Architectural/Engineering Specification

Symmons Hand Shower and Slide Bar Assembly _____ Features include 1 mode hand shower unit, 2-3/4″ diameter, dual checks for backflow protection, 30″ slide bar with cradle for hand shower mounting (model H321-V), cradle for hand shower mounting (model H301-V), standard flow rate is 2.0 gpm (7.6 L/min), optional lower flow rate restrictor available, Polished Chrome finish (standard). 10-Year Commercial Warranty. ASME A112.18.1/CSA B125.1 compliant. Available options: 1.5 = 1.5 gpm (5.7 L/min) flow restrictor, STN = Satin Nickel finish, 72 = 72″ hose in place of 60″ hose, MB = Matte Black finish, BBZ = Brushed Bronze finish and L2 = Less hand shower wand.

Symmons Industries, Inc. ▪ 31 Brooks Drive ▪ Braintree, MA 02184 ▪ Phone: (800) 796-6667 ▪ Fax: (800) 961-9621
Copyright © 2025 Symmons Industries, Inc. ▪ symmons.com ▪ gethelp@symmons.com ▪ ZV-1783 REV F ▪ 010825

SYMMONS®

H321-V, H301-V

Dimensions

Vertical Bar	
Length	Drawing Dimension
30"	30" (762 mm)
48"	48" (1219 mm)

Note: Dimensions subject to change without notice.

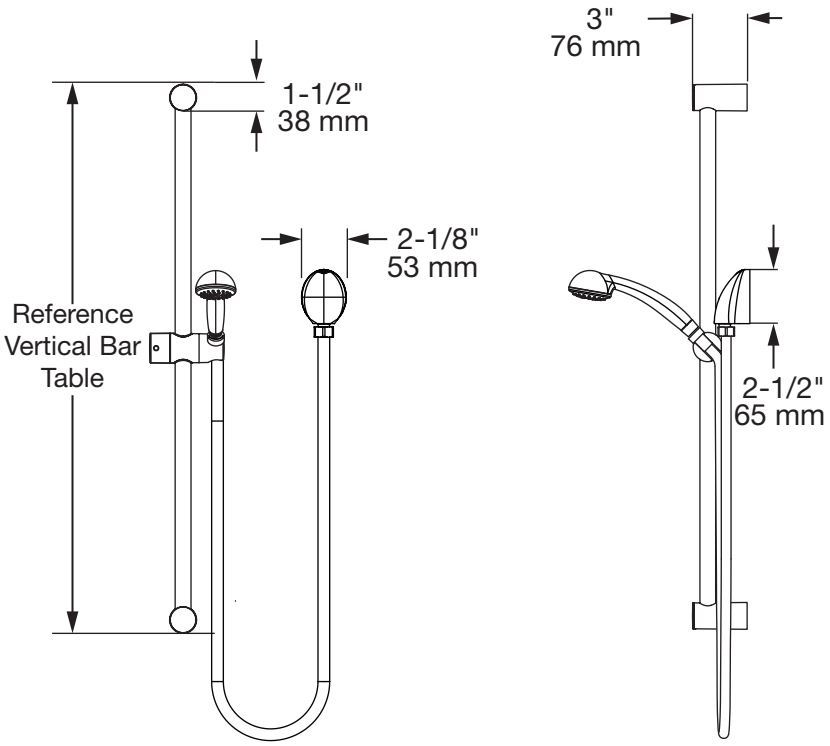

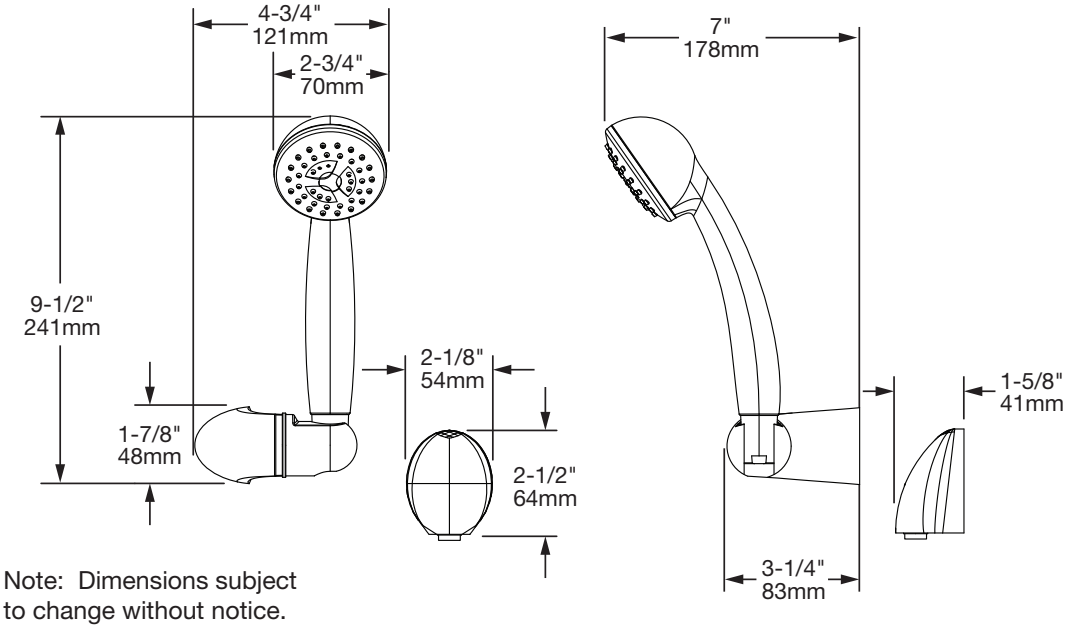

Note: Dimensions subject to change without notice.

Symmons Industries, Inc. ▪ 31 Brooks Drive ▪ Braintree, MA 02184 ▪ Phone: (800) 796-6667 ▪ Fax: (800) 961-9621
Copyright © 2026 Symmons Industries, Inc. ▪ symmons.com ▪ gethelp@symmons.com ▪ ZV-1783 REV G ▪ 01082026