ANZZI ELECTRIC TOWEL WARMER
INSTALLATION & OPERATION MANUAL
V3.1
08/14/2026

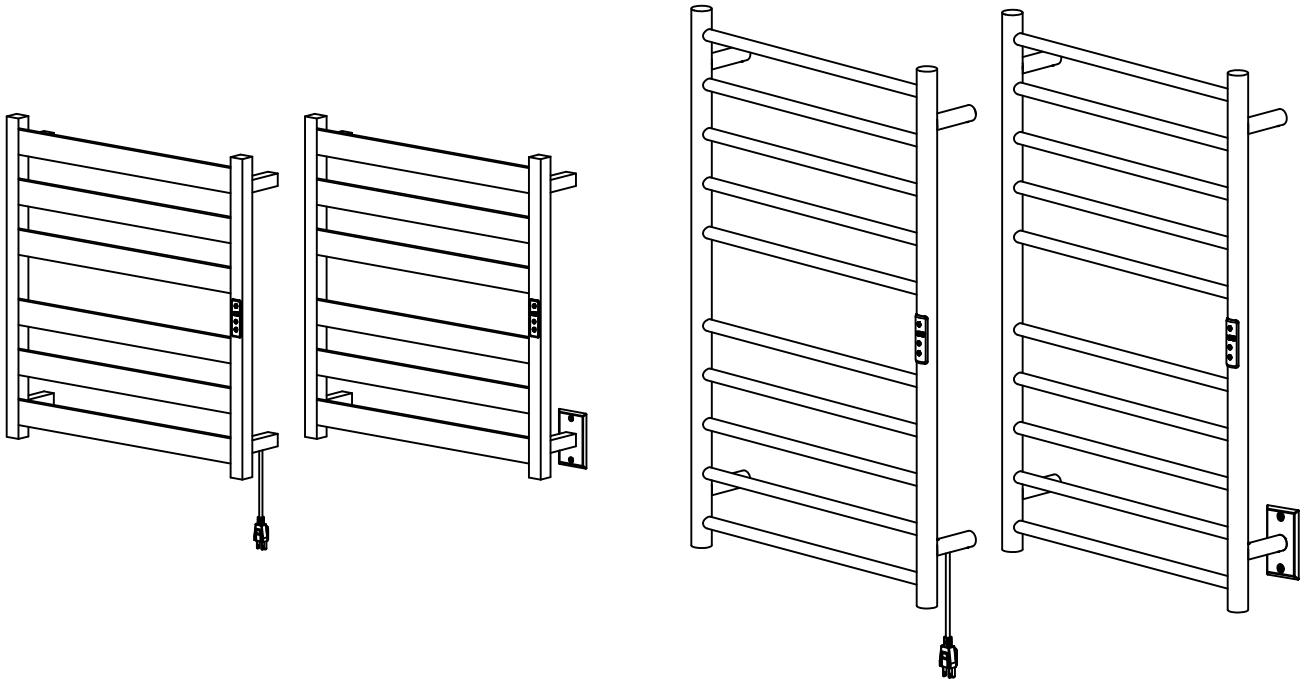

DON'T WAIT! REGISTER NOW!

Register your product within 90 days to ensure it is recognized as a purchase and covered under warranty.

Register online at https://anzzi.com/pages/register or scan the QR code on PG. 2.

ANZZI®

PRODUCT REGISTRATION*

IMPORTANT: Warranty will not be recognized unless product is registered.

Register online at https://anzzi.com/pages/register or Scan the QR code below.
Registering your product maximizes your warranty benefits and ensures prompt service and support.

1. USE YOUR PHONE CAMERA TO SCAN THE QR CODE
2. FILL IN A QUICK REGISTRATION FORM
3. CLICK SUBMIT AND ENJOY PEACE OF MIND

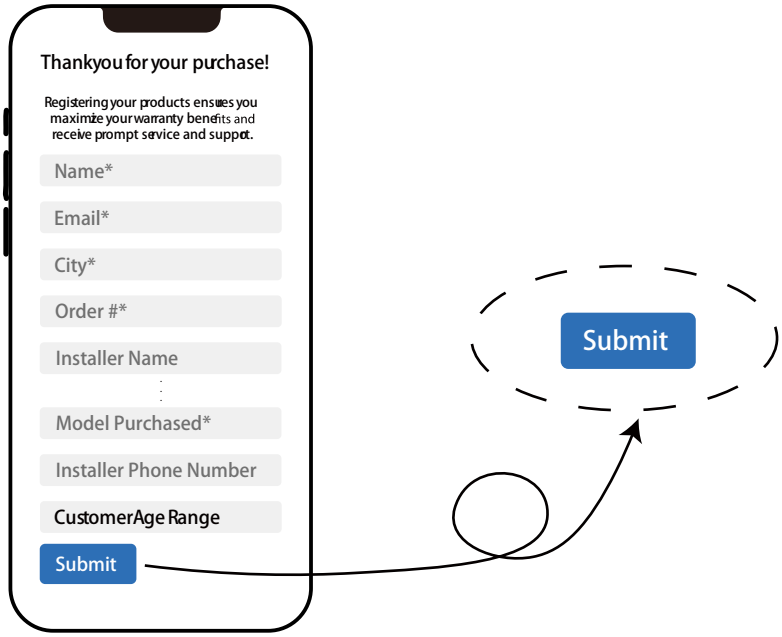

Need help? For technical support call **305-363-4679** or visit us at **www.ANZZI.com**

INSTRUCTION

Before using this product. Please read the following instructions carefully and keep this pamphlet for future reference.

About the product:
This product is designed for drying or warming towels and for indoor use only.
It is manufactured according to ETL standard and used under the voltage of 120V AC.

Safety Precautions:
1. The supplied power system which is connected to the towel warmer must be used with a over-current protection device.
2. This product is supplied with the relevant, fitted three pin socket and three-wire cable, to avoid any risks or danger it must be properly grounded.
3. Any change of the repair to the damaged internal wires must be done by a qualified technician who is deemed qualified by the industry standard. When any external wire fittings are required, the power must be cut off completely.
4. Any hard scrubbing or scratching on the product surface is strictly prohibited.

Warning:
1. This product must be grounded. If it should malfunction or breakdown, grounding provides a path of least resistance for electric current to reduce the risk of electric shock. This product is equipped with a electric cord having an equipment-grounding conductor and grounding plug. The plug must be inserted into an appropriate outlet that is properly installed and grounded in accordance with all local codes and ordinances.
   NOTICE:
   Improper connection of the equipment-grounding conductor can result in a risk of electric shock. Check with a qualified electrician or service person if you are in doubt as to whether the outlet is properly grounded.Do not modify the plug provided with the product -- if it will not fit the outlet, have a proper outlet installed by a qualified electrician.
2. If the product is supplied from an extension cord set or electric portable outlet device, then the extension cord set or electric portable outlet device should be positioned so that it is not subject to splashing or excessive moisture.
3. This product is not intended for use by persons (including children) with reduced physical, sensory or mental capabilities, or lack of experience and knowledge, unless they have been given supervision or instruction concerning use of the product by a person responsible for their safety.
4. Children should be supervised to ensure that they do not play with the product.
5. The towel rail is to be installed so that switches and other controls cannot be touched by a person in the bath or shower.

⚠ In order to avoid a hazard for very young children, this product should be installed so that the lowest heated rail is at least 600 mm above the floor.

PRODUCT SIZE CHART

This is a universal manual, see attached indepent leaf for size chart of the specific model.

TOOLS

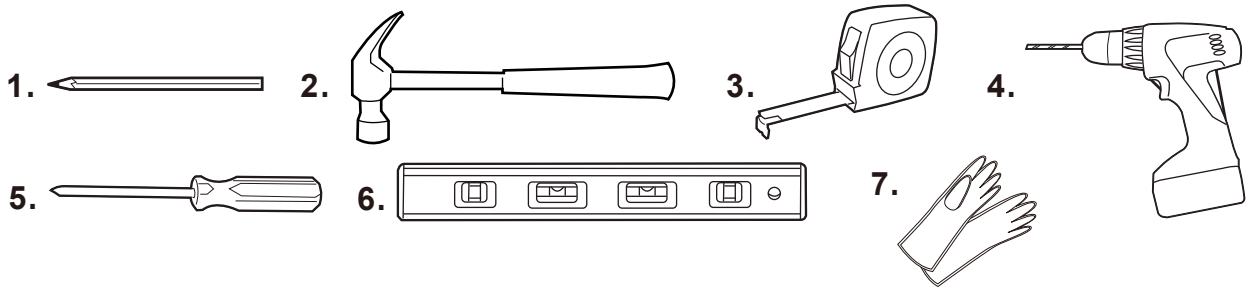

1.Pencil 2. Hammer 3. Tape Measure 4. Electric Drill
5. “+” screwdriver 6. Level 7. Gloves

PARTS LIST

This is a universal manual, confirm the purchased product with square or round tube, then refer to corresponding list.

PART	Description	Qty.
1	Wall Mounting Bracket	3
2	Power Cord Outlet Wall Mounting Bracket	1
3	Cone End Setting Screw	7
4	Fixing Block	4
5	Self-tapping Screw	4
6	Screw Expansion Tube	4
7	Phillips Head Screw	3
8	Hexagen Wrench	1
9	Hardwired Wall Mounting Bracket	1
10	Hardwired Wall Mounting Plate	1
11	Wire Nut	3
12	Cap Screw	2

PARTS LIST

For square tube model

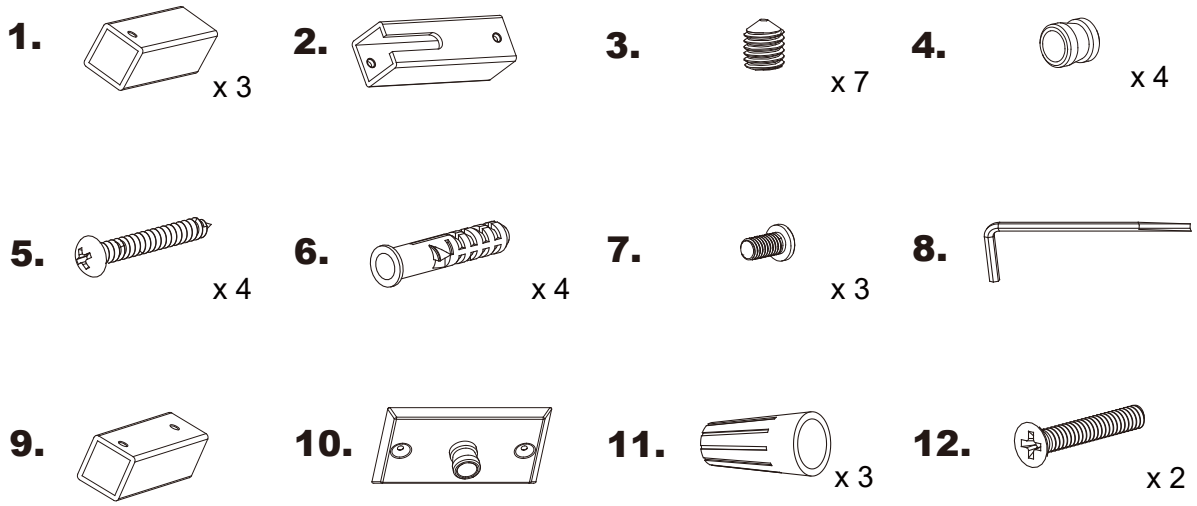

For round tube model

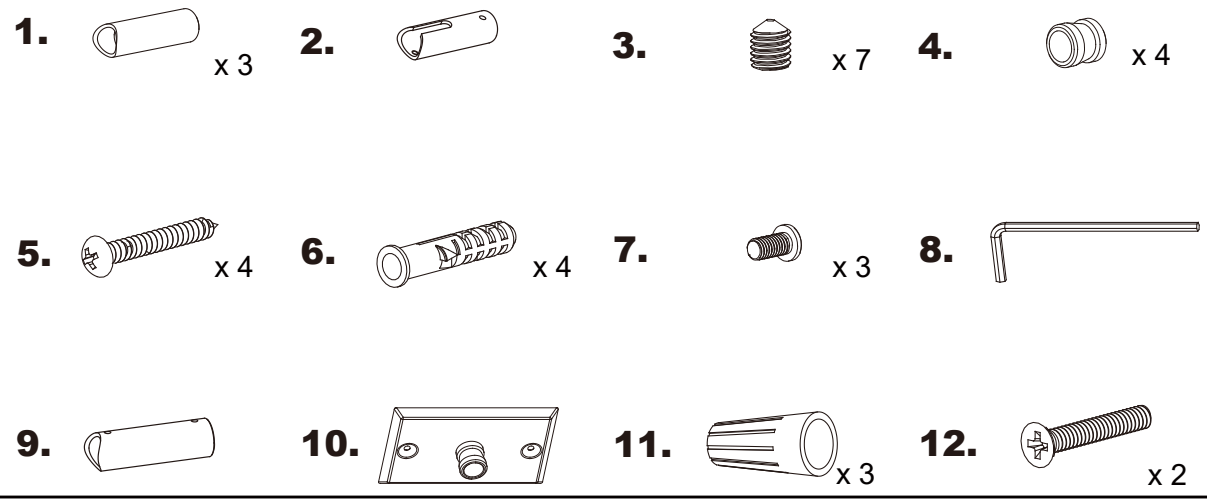

MOUNTING DISTANCE LIST

Model	A	B
TW-AZ014**	19.29" [490mm]	19.68" [500mm]
TW-AZ016**	16.54" [420mm]	12.60" [320mm]
TW-AZ018**	22.36" [568mm]	9.45" [240mm]
TW-AZ023**	22.44" [570mm]	20.47" [520mm]
TW-AZ025**	19.29" [490mm]	16.54" [420mm]
TW-AZ026**	22.44" [570mm]	29.13" [740mm]
TW-AZ027**	22.36" [568mm]	24.41" [620mm]
TW-AZ075**	18.82" [478mm]	24.41" [620mm]
TW-WM104**	19.61" [498mm]	27.17" [690mm]
TW-WM105**	19.61" [498mm]	41.73" [1060mm]

NOTICE:
Please mark the location of Mounting Brackets according to this list.

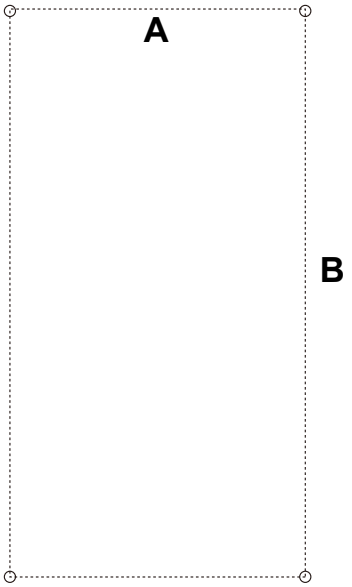

INSTALLATION

This is a universal manual, below using graphics of a round tube product to show the installation steps. Installation steps of square tube products are the same. Product can be both plug-in and hardwire installation, choose one based on need.

1. Plug-in Installation (1 / 2)

01

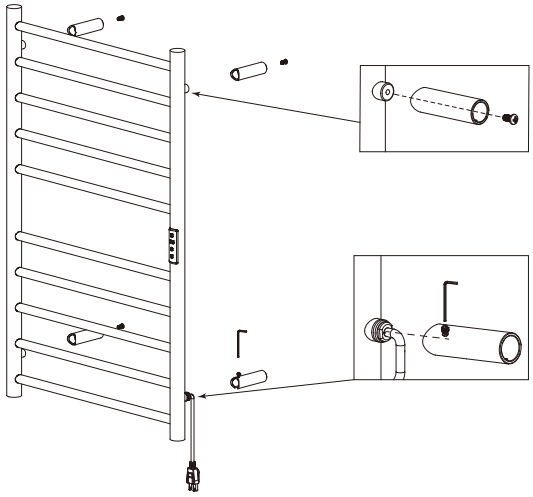

STEP 1:

Use Phillips Head Screw [7] to fix the three Wall Mounting Bracket [1] on the nut post on the back of the product, put Electrical cord Outlet Wall Mounting Bracket [2] in the nut post at the electrical cord position, and secure the screw with Hexagen Wrench [8] .

02

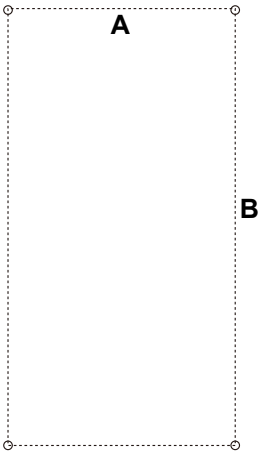

STEP 2:

Mark the mounting brackets location on the wall according to the data from Mounting Distance List.
Make sure the bottom of the product at least 23.62" [600mm] off the ground and the product is horizontal.

03

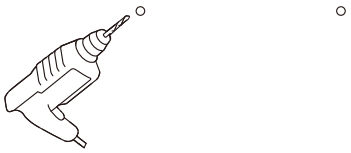

STEP 3:

Use an 8MM drill bit to drill holes at the marked locations.

1. Plug-in Installation (2 / 2)

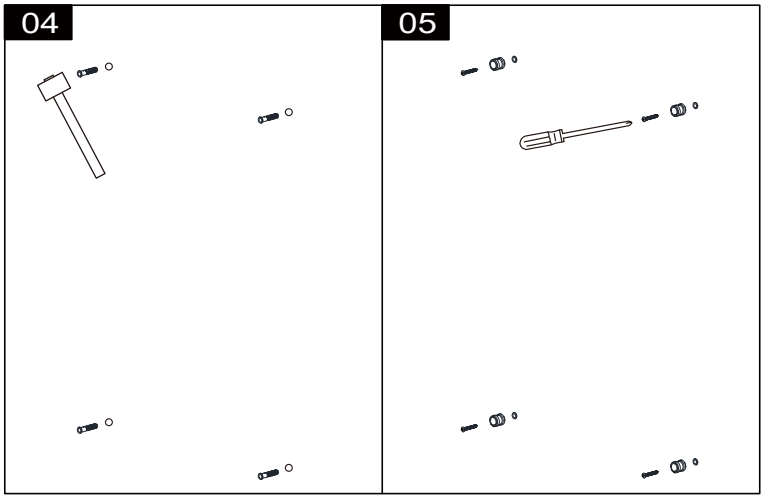

STEP 4:
Knock Screw Expansion Tube [6] into the drilled hole.

STEP 5:
Fix the Fixing Block [4] to the wall with Self-tapping Screw [5] slightly.

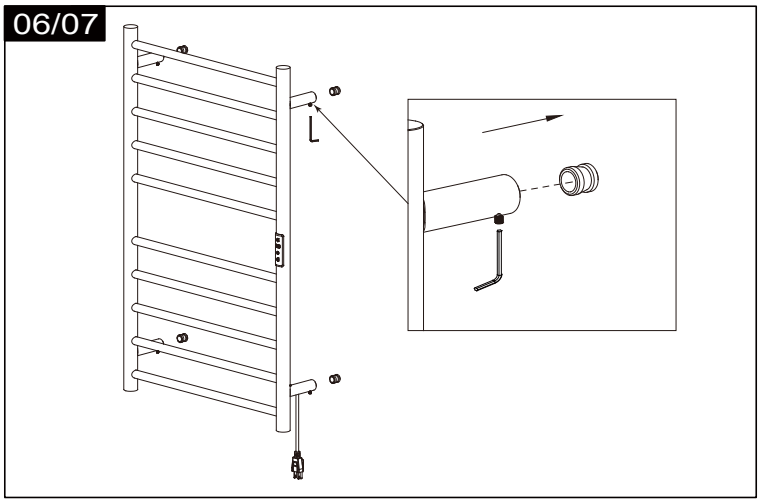

STEP 6:
Put the product to the Fixing Block, make sure it is horizontal.
Then take away the product, fix the Fixing Block [4] to the wall with [5] Self-tapping Screw fully.

STEP 7:
Assemble the product to the wall mounting base, screw the tapered end set screw into the screw hole of the round tube support tube with Hexagen Wrench [8] and tighten it.

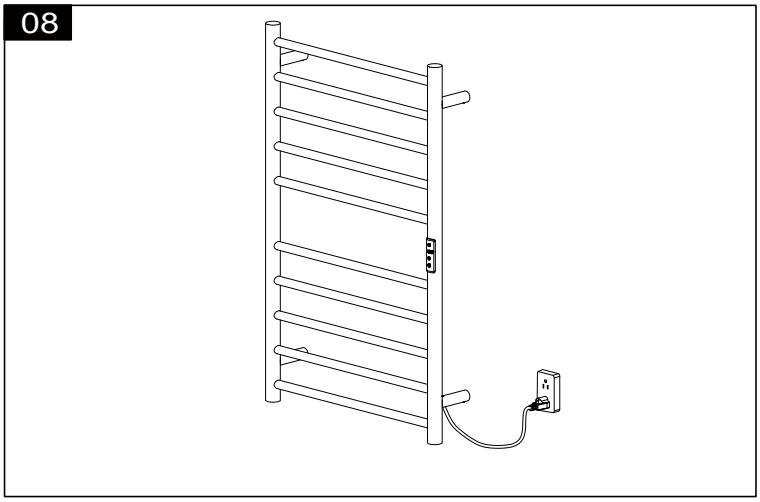

STEP 8:
Plug the electrical cord into a GFCI protected outlet.

2. Hardwire Installation (1 / 3)

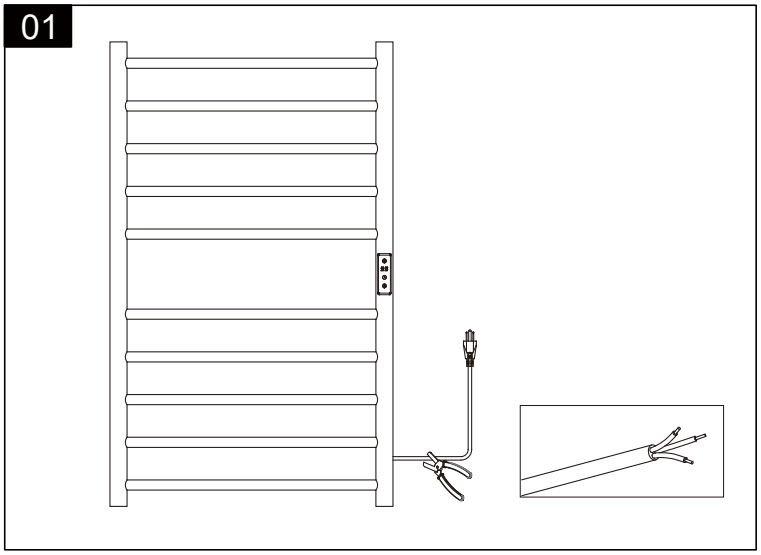

STEP 1:

Use scissors to cut off the electrical cord about 4.7" [120mm] from the back of the towel rack, and use a wire stripper to strip it.

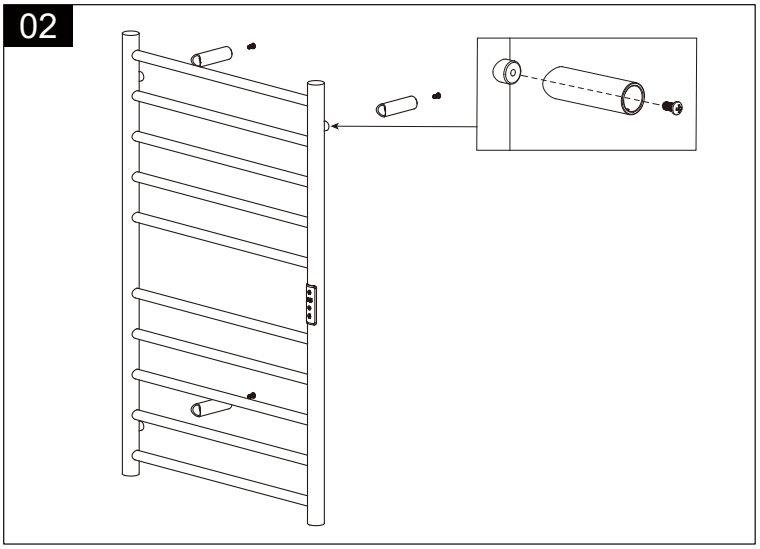

STEP 2:

Use Phillips Head Screw [7] to fix the three Wall Mounting Bracket [1] on the nut post on the back of the product.

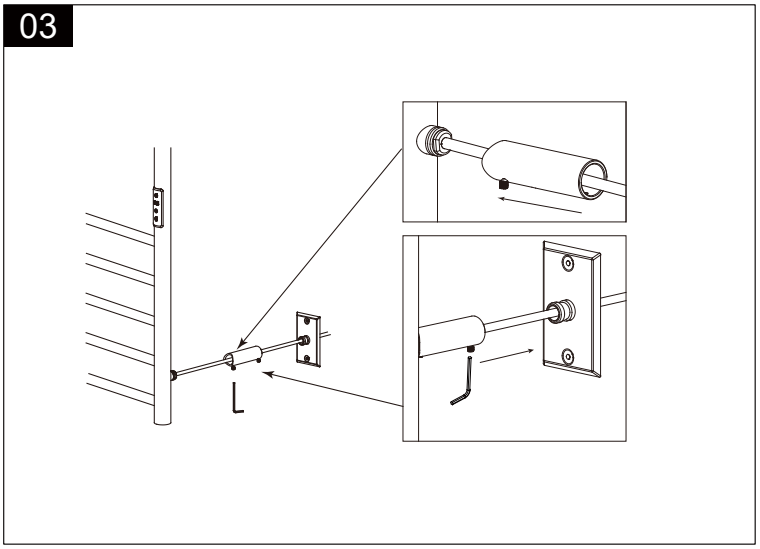

STEP 3:

Insert Hardwired Wall [9] Mounting Bracket onto the nut post of the electrical cord position, and tighten the two tapered end set screws with Hexagen Wrench [8] fixed with nut column and Hardwired Wall Mounting Plate [10] respectively.

2. Hardwire Installation (2 / 3)

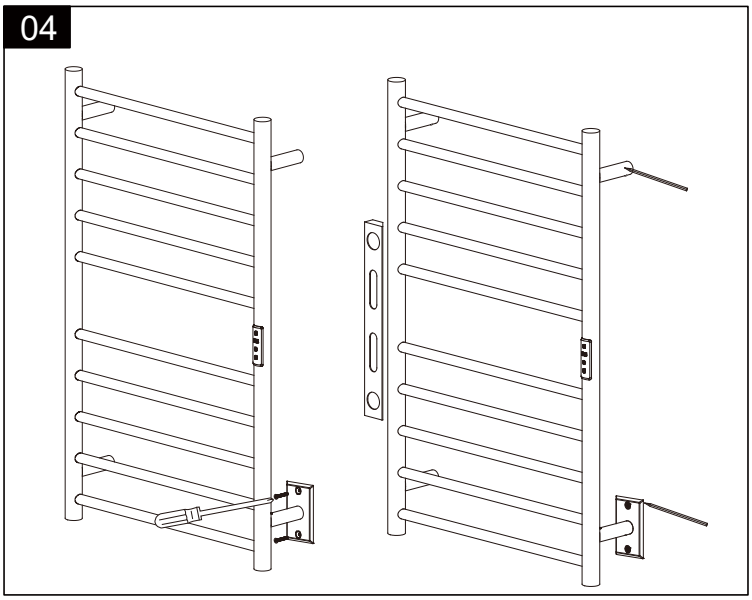

STEP 4:

Place the product on the wall to be installed, cover the installation cover on the wire box, use Cap Screw [12] to fix Hardwired Wall Mounting Plate [10] to the wire box, use a level to adjust the angle of the product, and use a pencil to mark the hanging wall The position of bracket screws and decorative cover concealed installation.

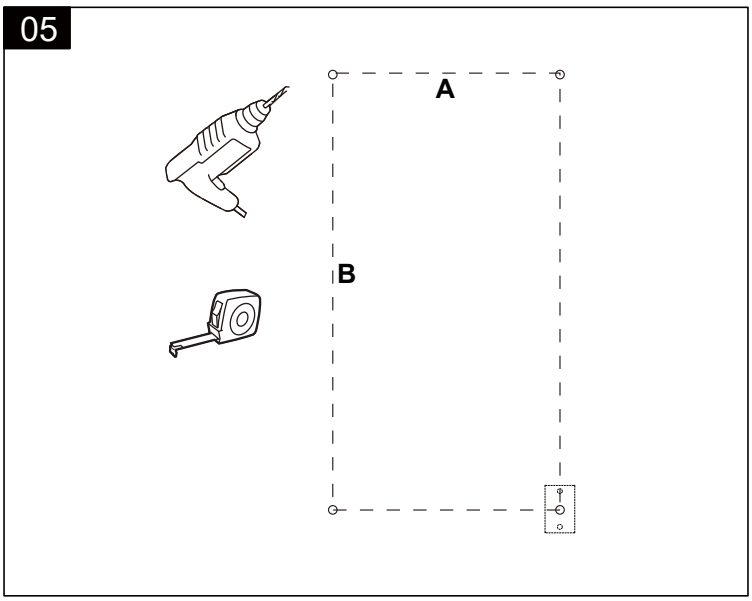

STEP 5:

Use a screwdriver to remove Hardwired Wall Mounting Bracket [9] from the wall.
Check the distance of locations according to the data from Mounting Distance List.
Then use an 8MM drill bit to drill holes at the marked locations.

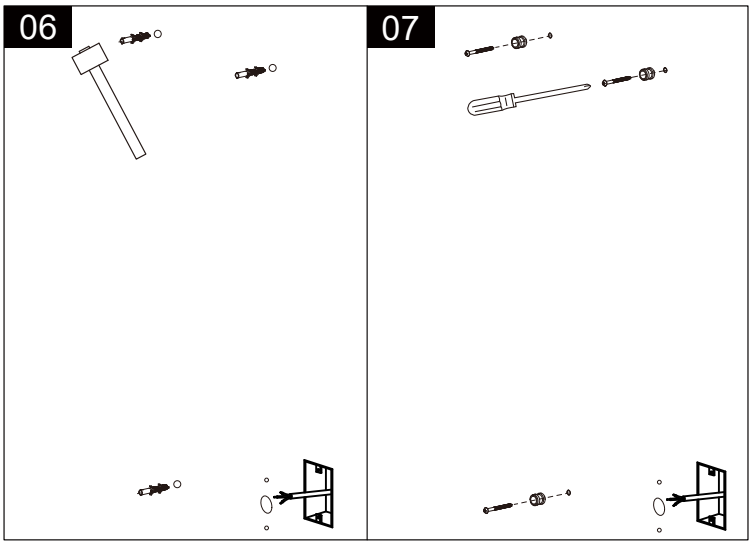

STEP 6:

Knock Screw Expansion Tube [6] into the drilled hole.

STEP 7:

Fix the Fixing Block [4] to the wall with Self-tapping Screw [5] slightly,Put the product to the Fixing Block, make sure it is horizontal, then take away the product, fix the Fixing Block [4] to the wall with Self-tapping Screw [5] fully.

2. Hardwire Installation (3 / 3)

08

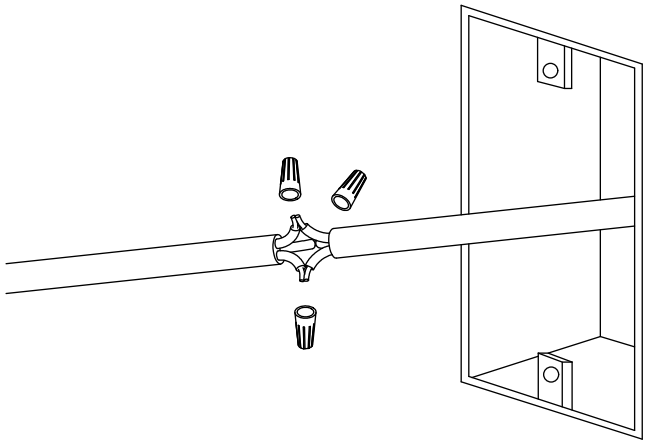

STEP 8:

Strip the insulation from the electrical cord and connect both electrical cord to Tighten the copper wire ends of the electrical cord in the junction box respectively. Then use the Wire Nut [11] to fix the copper.

09

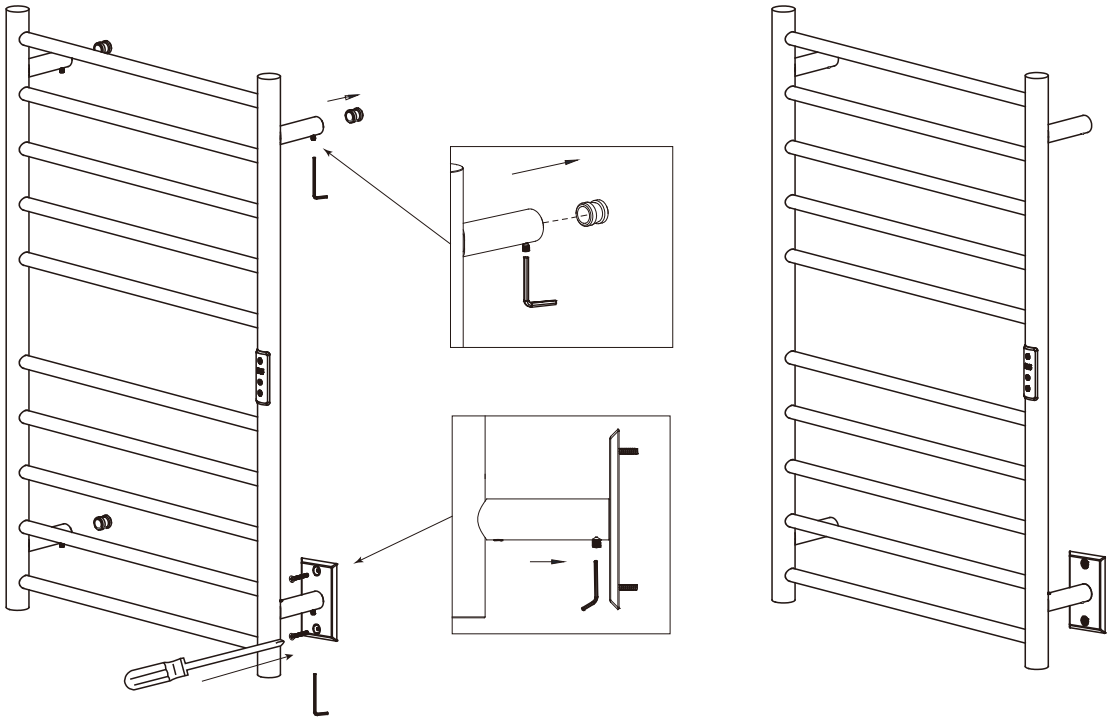

STEP 9:

Assemble the product to the wall mounting base, use Hexagen Wrench [8] to screw the tapered set screw into the screw hole of Wall Mounting Bracket [1] and tighten. Use Cap Screw [12] to fix Hardwired Wall Mounting Plate [10] on the wall.

OPERATING INSTRUCTION

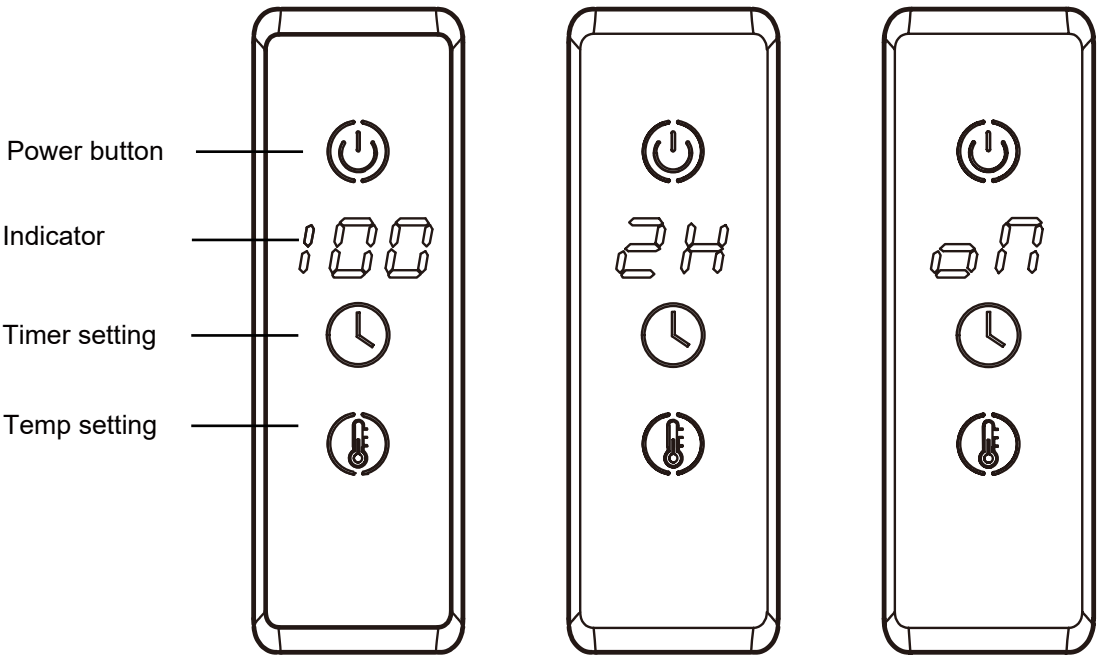

Fig1 Fig2 Fig3

Specification

NOTE: Please use the towel warmer under 120 Voltage only.

- Power supply specification: 120V AC / 60HZ
- Setting temperature range: 100 ~ 140°F (37.7 ~ 60 °C)
- Timer: 1 ~ 8 Hours

NOTICE: The operating temperature is related to the ambient temperature, may be different from the setting temperature.

- Power button: Press to turn on the towel warmer. The screen shows the preset heating tempreature at default temp 100°F, Press again to turn off. (Fig 1)
- Timer setting: Press to setup the heating time between 1 to 8 hours. When the screen shows "ON", the towel warmer will keep heating and maintain at the pre-set tempreature. (Fig 2, Fig 3)
- Temp setting: Press to setup the heating temperature between 100°F to 140°F. (Fig 1)

CLEANING & MAINTENANCE

- Towel warmers are designed for heating towels and bathrobes and should not be used for other purposes. The manufacturer or reseller assumes no liability if the device is used in combination with equipment or accessories not sold by the manufacturer.

- This towel warmer is to be only used with fabrics that are water washable. Towels which contain soap or detergent residue may appear to have scorch marks; however, this is simply discoloration of the residue in.

- Never stand, sit or climb on the unit.

- This towel warmer operates at high temperatures that can cause burns. Do not touch surfaces of the towel warmer while the warmer is in operation. The unit is designed to warm up towel and may become very hot.

- Do not allow unsupervised children in the vicinity of the towel warmer; and warn children of hot surfaces. An adult must supervise when the device is used by or near children.

- Unplug the unit with a dry hand and ensure that the electrical circuit breaker is off the main panel before wiring, carrying out a repair or servicing your heated towel warmer.

CLEANING & MAINTENANCE

- Do not place your towel warmer inside a shower, sauna or plunge into the water.
- To ensure continued protection against risk of electric shock, plug the unit into a properly grounded outlet.
- Approved for domestic use only. Do not use outdoors.
- In order to better maintain this product, please wipe it with a wet towel (or sponge).
- It is forbidden to use decontamination powder, abrasive powder and oil, acid and alkaline cleaners, which are harmful to the surface of the product.
- When maintaining or repairing this machine, please turn off the power or unplug it first to ensure safety.

TROUBLESHOOTING

SYMPTOM	RECOMMENED ACTIONS
Thermostat failure	Power off for first step and restart.Please contact the after-sales service if the problem still cannot be sloved.
The electrical cord is plugged in and tripped	Ask a professional to check the socket-related lines to troubleshoot. Please contact the after-sales service if the problem still cannot be sloved.
Not be heated up after 1 hour	Please contact the after-sales service directly when the above problems occured.
Electric shock on product	Please contact the after-sales service directly when the above problems occured.
Thermostat broken	Please contact the after-sales service directly when the above problems occured.
Indicator show “E r” status	Please contact the after-sales service directly when the above problems occured.

ANZZI®