CAFÉ™ Professional Series 30" Built-In Convection French Door Single Wall Oven

CTS90FP4ZW2 / CTS90FP3ZD1 / CTS90FP2ZS1

CAFÉ

ALSO AVAILABLE IN

CTS90FP3ZD1
Matte Black
with Brushed
Stainless handles

CTS90FP2ZS1
Stainless Steel
with Brushed
Stainless handles

This model requires a one-time WiFi connection to download oven features and functionality enabled by software. Follow instructions on your LCD screen on how to connect.

FEATURES & BENEFITS

Professional design brought to life – Bring unparalleled sophistication to your kitchen with a French door wall oven that exudes professional style and allows you to personalize the look with customizable handles and finishes

French door design for more approachable access – allows you to open both doors using a single hand and easily place food inside

The perfect bake is now perfectly easy – Achieve unrivaled performance with the only system that delivers top-down true convection for consistent results on special occasion favorites like roasts, chicken, turkey and more

Fried taste. Crisp texture. Less oil. – Make your favorite "fried" foods healthy, thanks to Air Fry Mode that crisps without using oil for frying

Precision is the name of your cooking game – Confidently try new recipes and perfectly execute your favorites, using a smart system that automatically tracks progress, modifies temperatures and adjusts cook times

No preheat, no hassle – Save time with a variety of precision cooking modes that eliminate the need for preheating

Brighten up life in the kitchen – Easily navigate wall oven settings using a stunning full-color display that adds an unexpected touch of style to your kitchen

Customize your cooking with this smart oven shortcut feature, saving your most frequently used cooking modes for instant access. Seamlessly blend innovation and efficiency so you can focus on what truly matters – creating, entertaining, and enjoying

Enjoy convenient temperature control from anywhere – Preheat while running errands or change oven temperatures while doing yard work with the SmartHQ™ App

Say goodbye to guesswork with integrated tools that let you set and label unlimited timers and add recipes and video content

Create a look that matches your personal style – Select any combination of premium finishes and hardware options to create a stunning look customized to any owner's taste

APPEARANCE

Handle	CAFÉ ProStyle; Customizable
Installation	Above Warming Drawer; Side-by-Side; Under Built-In Advantium®; Under Built-In Microwave and Under a Countertop or Cooktop

FEATURES

Configuration	French Door
Cooking System	True European Convection with Direct Air
Oven Cleaning Type	Self-Clean with Steam Clean Option
Cleaning Time	Variable with Delay Clean Option
Oven Cooking Modes	Convection Bake Convection Bake Multi-Rack Convection Broil Hi/Lo Convection Roast Thermal Bake Thermal Broil Hi/Lo Keep Warm Proof
Precision Cooking Modes	Artisan Pizza Mode Turkey Mode Steak Mode And More ...
Control Type	7" Full-Color Touch LCD Screen
Oven Rack Features	2 Heavy Duty Roller Racks 6 Embossed Rack Positions
Product Type	Wall Oven Single
Oven Control Features	12-Hour Shut-off Capability Control Lock Capability C° or F° Programmable Delay Time Unlimited Timers Mis-Wire Detection OU Sabbath Mode Premium Speaker Temperature Probe
Connected Capabilities via WiFi	Recipes Cooking instruction Grocery list/shop Streaming Audio Personalized Wallpaper Remote Control Weather
Oven Interior	2 Halogen Interior Oven Lights Black Gloss Finish Hidden Bake

CAPACITY

Total Capacity (cubic feet)	5.0

POWER / RATINGS

Amp Rating at 208V	20
Amp Rating at 240V	20
Bake Wattage	2850W
Broiler Wattage	4300W
Convection Wattage	2400W
KW Rating at 208V	3.4
KW Rating at 240V	4.5

WEIGHTS & DIMENSIONS

Approximate Shipping Weight	208
Net Weight	190
Overall Height	28-5/8
Overall Width	29-3/4
Overall Depth	26-3/4
Cabinet Width	30
Cutout Dimensions (W x H x D) (in.)	28-5/8 x 27-5/16 x 23-1/2
Oven Interior Dimensions (W x H x D) (in.)	25 x 17-3/8 x 20-1/4

CAFÉ™ Professional Series 30" Built-In Convection French Door Single Wall Oven

CTS90FP4ZW2 / CTS90FP3ZD1 / CTS90FP2ZS1

OPTIONAL ACCESSORIES

30" Never-Scrub Roller Rack	UXWORXR30
Large Broiler Pan	WB48X10056
72" Replacement Electrical Conduit	WB18T10580

WARRANTY

Parts Warranty	Limited 1-Year Entire Appliance
Labor Warranty	Limited 1-Year Entire Appliance
Warranty Notes	See Written Warranty for Full Details

DIMENSIONS AND INSTALLATION (IN INCHES)

Most 30" Wall Cabinets can be used with this unit.

Note: These ovens are not approved for stackable installations. Cabinets installed adjacent to wall ovens must have an adhesion spec of at least a 194°F temperature rating.

Door handle protrudes 2-1/2" from door face. Cabinets and drawers on adjacent 45° and 90° walls should be placed to avoid interference with the handle.

Electric wall ovens are not approved for installation with a plug and receptacle. They must be hard wired in accordance with installation instructions.

Installation Information: Before installing, consult installation instructions packed with product for current dimensional data and for alternate installation options.

A minimum gap of 14" from either side of the wall oven to an adjacent 45° or 90° cabinet, drawer or wall is required to avoid interference with the opening of the doors. The handles protrude 2-1/2" from the door face.

Countertops may need to be notched on either side of the wall oven to avoid interference with the opening of the doors.

THIS MODEL IS NOT APPROVED FOR FLUSH-MOUNT INSTALLATION

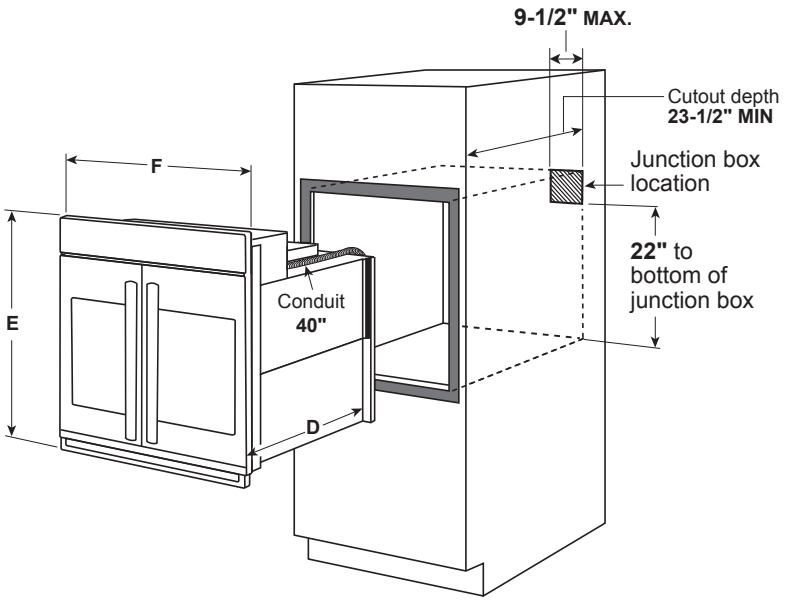

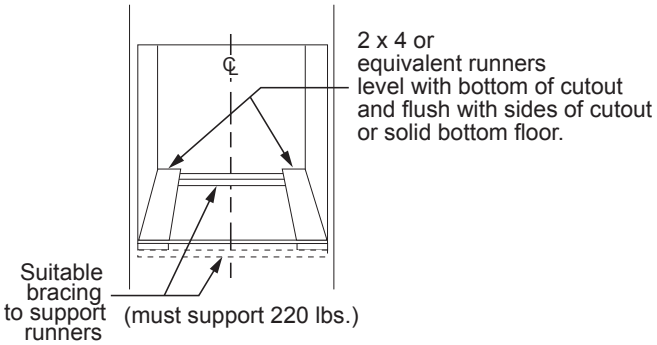

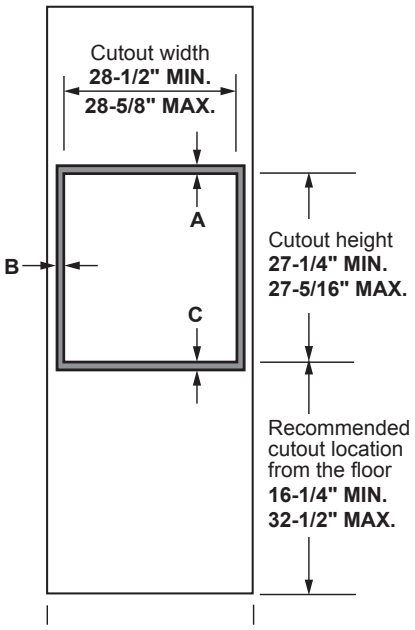

Cabinet	**30"**
A - Overlap of oven at top of cutout	**1-1/4"**
B - Overlap of oven other side of edge of cutout	**3/4"**
C - Overlap of oven at bottom of cutout	**1-1/4"**
Oven	
D - Install depth	**23-1/2"**
E - Overall height with trim	**28-5/8"**
F - Overall width	**29-3/4"**

DIMENSIONS AND INSTALLATION INSTRUCTIONS ARE SHOWN IN INCHES

CAFÉ™ Professional Series 30" Built-In Convection French Door Single Wall Oven

CTS90FP4ZW2 / CTS90FP3ZD1 / CTS90FP2ZS1

DIMENSIONS AND INSTALLATION (IN INCHES)

Note: A minimum gap of 14" from either side of the wall oven to an adjacent 45° or 90° cabinet, drawer or wall is required to avoid interference with the opening of the doors. The handles protrude 2-1/2" from the door face.

Note: Countertops may need to be notched on either side of the wall oven to avoid interference with the opening of the doors.

Installation information: Before installing, consult installation instructions packed with product for current dimensional data and for alternate installation options.

THIS MODEL IS NOT APPROVED FOR FLUSH-MOUNT INSTALLATION

SIDE-BY-SIDE INSTALLATION FRONT VIEW OF CUTOUTS

If both ovens are French-Door models, then 30" min.
If the second oven is a drop-down door model, then 14" min.

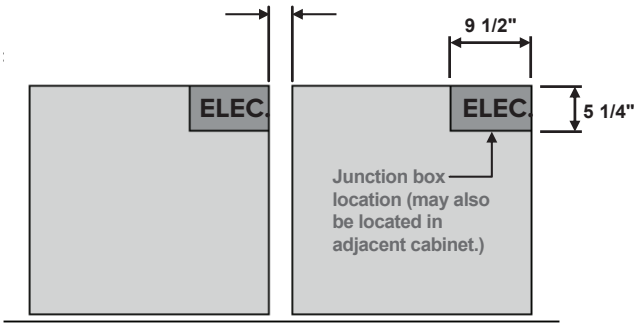

INSTALLATION TO ADJACENT COUNTERTOP AND CABINET DOORS

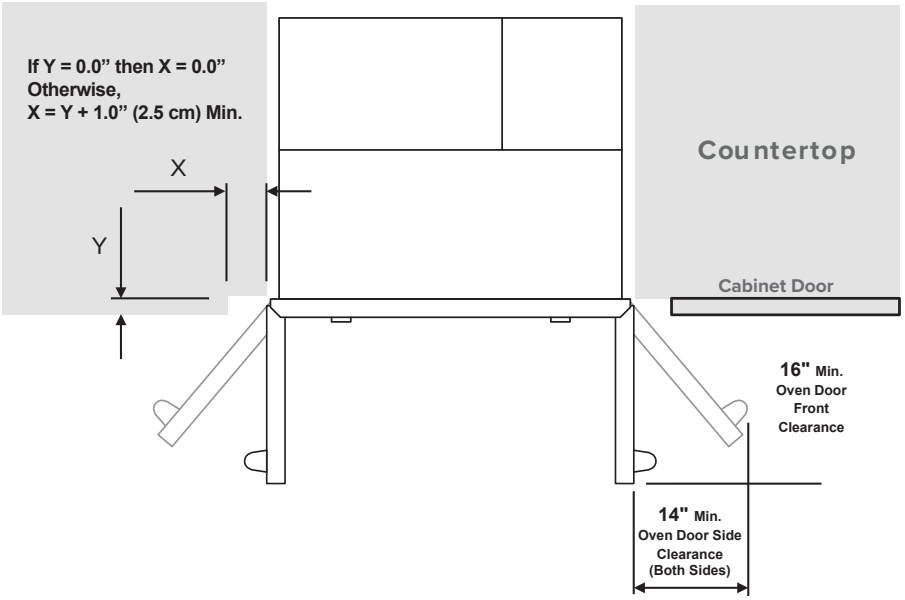

DIMENSIONS AND INSTALLATION INSTRUCTIONS ARE SHOWN IN INCHES

ADDITIONAL ACCESSORIES

CXWSFHKPMBZ
Brushed Bronze
2 handles
(Standard on Matte White)

CXWSFHPMSS
Brushed Stainless
2 handles
(Standard on Matte Black)

CXWSFHKPMBT
Brushed Black
2 handles

CXWSFHPMCU
Brushed Copper
2 handles

CXWSFHKPMCG
Brushed Brass
2 handles

CXWSFHKPMFB
Flat Black
2 handles

© 2026 GE Appliances