amalfi

ASSEMBLY INSTRUCTIONS

OWEN COFFEE TABLE

ITEM NO: G0001090

PARTS



A X 16

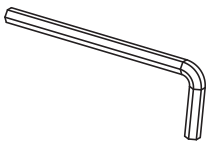

B

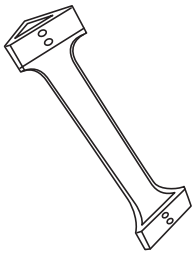

C X 4

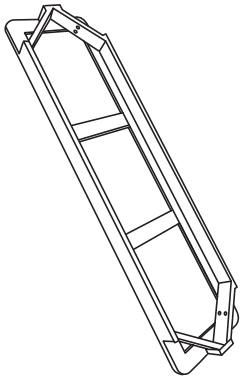

D

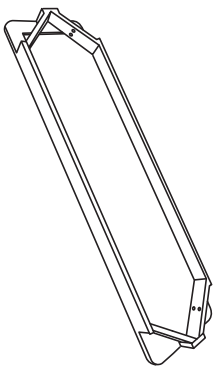

E

STEP 1

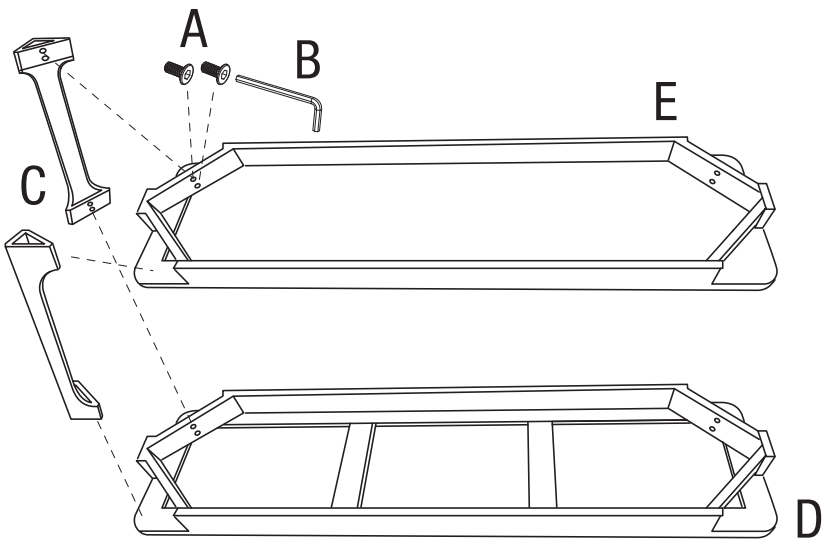

STEP 2

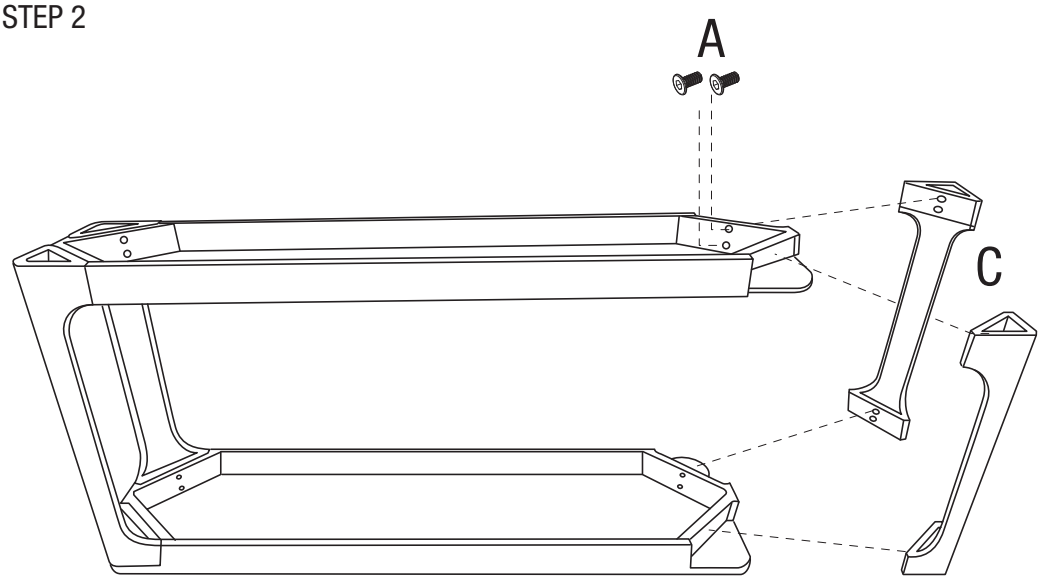

FINAL

