20.0 Liter Square Tight Head with Integrated Handle/Internal Thread (IB2) 1300gr.

Product Uses
Liquid Products

Product Codes
Container: **STH Series**
Description: 20L Square Tighthead

Features
UN Rating: 3H1/Y1.8/100
Nominal capacity: 5.3 USG / 20.0 L
Maximum capacity: 5.65 USG / 21.4 L
Tare weights: 2.87 lbs. / 1.30 kgs

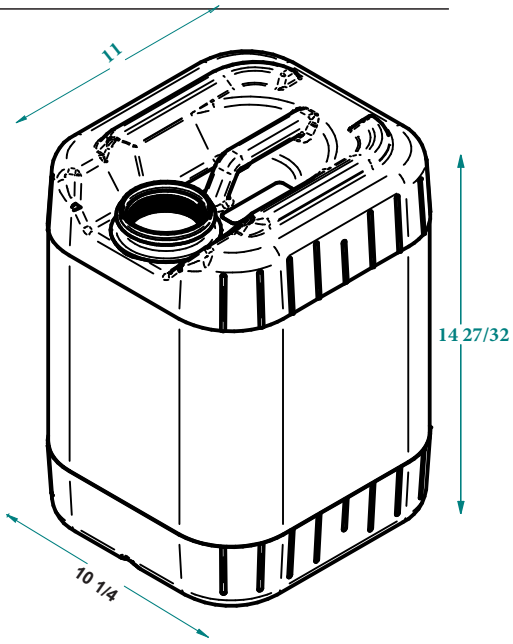

Colors
Standard: White, Black, Blue and Natural
Custom: Available at manufacturer's discretion

Decorating Options
Maximum Label Area:
Perimeter: 38-1/4" x 8-11/16" H
See Salesperson for Options

Shipping Data

	Containers
Qty. per floor spot:	112
Gross Weight (lbs./kgs)*:	321 / 146
Length (in./cm.):	44 / 112
Width (in./cm.):	33 / 84
Height (in./cm.):	107 / 273

Estimated truckload quantity of 3,360 containers**

Filled Containers
Refer to document # ETS-CD-1002
for storage and shipping recommendations.

*Notes: *Weight does not include pallet / packaging*
***Truckload quantity based on 53' trailer*

Materials
FDA approved materials
Resin: Body: High-Density Polyethylene (HDPE)

Optional Carrying Handle
Integral

DISCLAIMER
THIS INFORMATION IS PROVIDED AS A GENERAL GUIDE, INCLUDING DIMENSIONS. IT IS THE CUSTOMER'S RESPONSIBILITIES TO SELECT THE PROPER CONTAINER FOR PRODUCT AND APPLICATION COMPATIBILITY.

DISTRIBUTED BY: Pipeline Packaging

REF NO.: DWG31436

DESCRIPTION:
20 Liter Square TH Pail with 2" Internal Buttress Opening