KINGSTON

FAUCETURE

Back and Side Splash Raised

Installation Instructions

Installation Step:

1. Spread the adhesive on the bottom & back of the rear splash back (A), push the rear splash back into position. Make sure that the wall is clean, dry, smooth, and free of any loose paint or wallpaper before installing back or side splashes. See manufacturers instructions for drying time.
2. Repeat , if necessary with the side splashes (B).

Tools Required



Adhesive

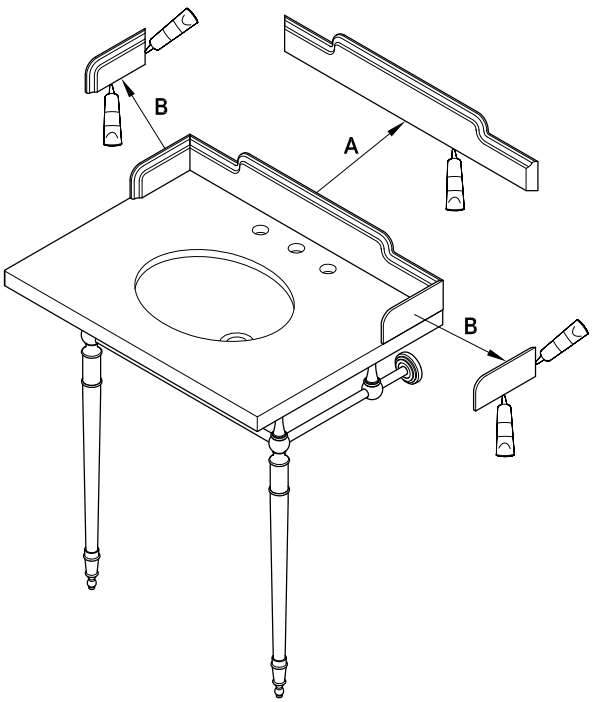

www.kingstonbrass.com

TOLL-FREE CUSTOMER SERVICE: 1-877-2-KBRASS
TECHNICAL SUPPORT E-mail: service@kingstonbrass.com
12775 Reservoir Street, Chino, CA 91710

©2025 LVC Kingston LLC. All Rights Reserved.
2025-05-T