bestchoiceproducts

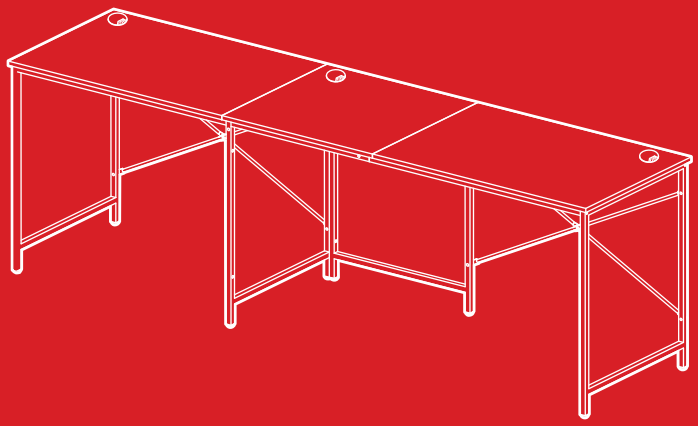

INSTRUCTION MANUAL

Computer Desk

Ver. 1

SKY6127

bestchoiceproducts

As shoppers, we're always trying to find the perfect balance between quality & value. At BCP, we believe we've achieved that. Our diverse catalog of everyday essentials is tailored especially to our customers & guaranteed to hit that sweet spot of high quality & low price.

Always.

NOTICE

Please retain these instructions for future reference.

- Please do not exceed the weight limitations of this item.
- Do not stand on or use any part of this item as a step ladder.
- Firmly secure all bolts, screws, and knobs before use.
- Reconfirm that all bolts, screws, and knobs are secure every 90 days.
- Fasten screws loosely during initial assembly. Do not firmly tighten the screws until the item is completely assembled.
- Do not use or store this item in the proximity of open flame or flammable/combustible chemicals.
- Be aware that some parts are heavy and have sharp edges.
- If any parts are missing, broken, damaged, or worn, stop using this product until repairs are made and/or factory replacement parts are installed.
- Do not use this item in a way inconsistent with the manufacturer's instructions as this could void the product warranty.

TOOLS REQUIRED

ALLEN WRENCH (PROVIDED)

WRENCH (PROVIDED)

200 LBS CAPACITY

1 PERSON ASSEMBLY

UP TO 30 MIN. ASSEMBLY

HARDWARE

1 M6 X 12MM BOLT

4 PCS

2 M6 X 28MM BOLT

11 PCS

3 M6 X 30MM BOLT

22 PCS

4 M6 X 40MM BOLT

5 PCS

5 M6 X 46MM BOLT

2 PCS

6 M6 X 48MM BOLT

1 PC

7 M6 END NUT

15 PCS

8 FASTENING SCREW

12 PCS

9 JOINER PLATE

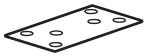

2 PCS

PARTS

A LEFT DESKTOP

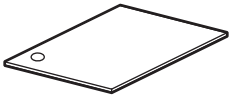

1 PC

B RIGHT DESKTOP

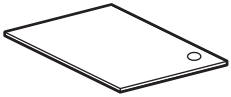

1 PC

C CENTER DESKTOP

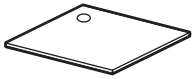

1 PC

D END FRAME PANEL

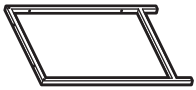

2 PCS

E MIDDLE FRAME PANEL

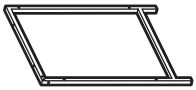

1 PC

F BACK SUPPORT PANEL

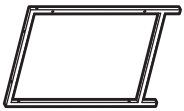

1 PC

G BACK CONNECTOR PANEL

2 PCS

H FRONT CONNECTOR PANEL

1 PC

I FEMALE CONNECTOR PANEL

1 PC

J MALE CONNECTOR PANEL

1 PC

K SUPPORT ROD

4 PCS

L FOOT

8 PCS

PARTS

M WIRE FUNNEL

3 PC

This product features two construction methods, depending on your preference.

PRODUCT ASSEMBLY (CORNER DESK)

1

Attach the part I female connector rod to the part J male connector rod with two part 1 bolts, then set aside.

Locate the part E middle frame panel and attach to the part F back support panel with two part 5 bolts and two part 7 end nuts, then set aside.

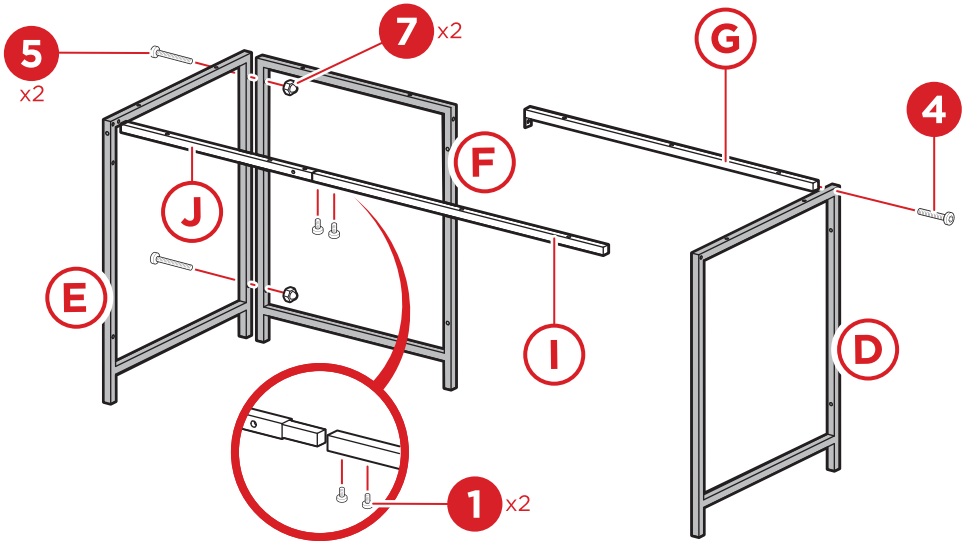

Attach one part G back connector rod to one part D end frame panel with one part 4 bolt.

2

Connect the part G connector rod to the back support panel assembly with one part 2 bolt and one part 7 end nut.

Connect the part D and E panels with the male/female connector rod and secure with two part 4 bolts.

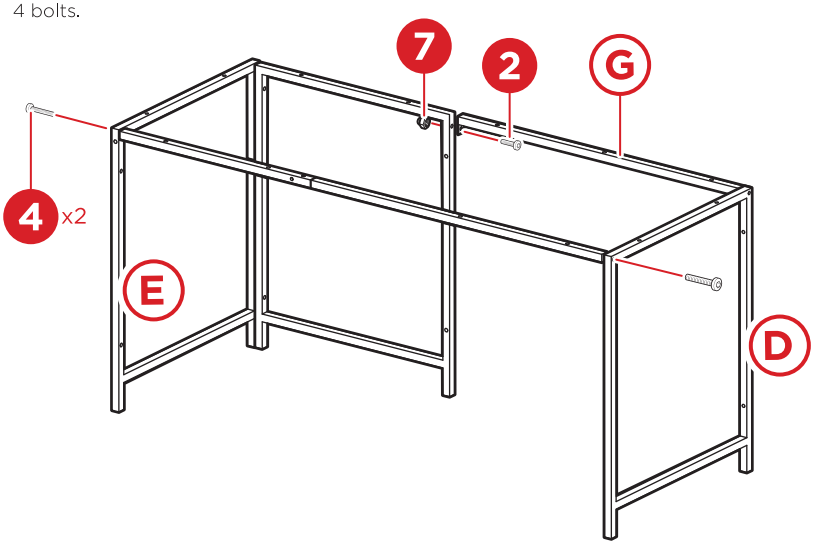

3

Attach one part G connector rod to the part E middle panel with one part 2 bolt and one part 7 end nut.

Attach the part H front connector rod to the part J connector rod with one part 2 bolt and one part 7 end nut.

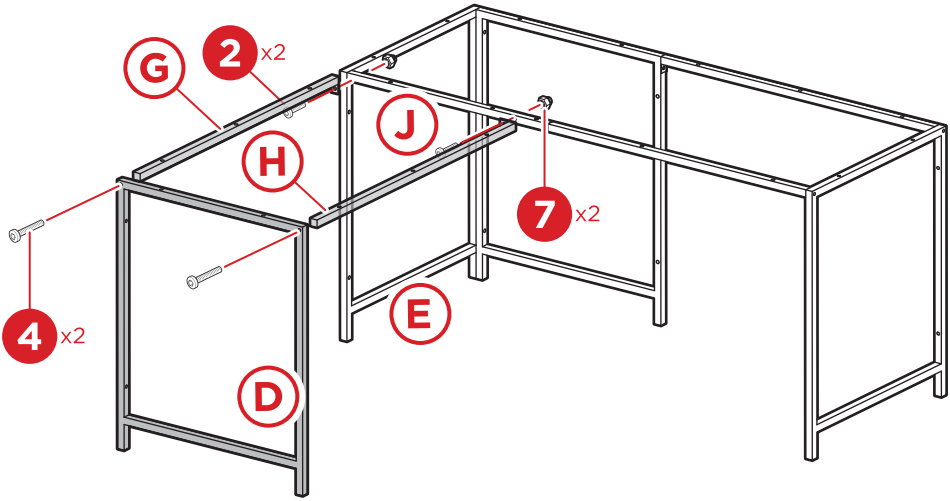

Attach the part D end panel with two part 4 bolts.

4

Secure two support rods between the part D and E panels with four part 2 bolts and four part 7 end nuts. Connect the rods with one part 1 bolt and one part 7 end nut.

Secure two support rods between the part D and F panels with four part 2 bolts and four part 7 end nuts. Connect the rods with one part 1 bolt and one part 7 end nut.

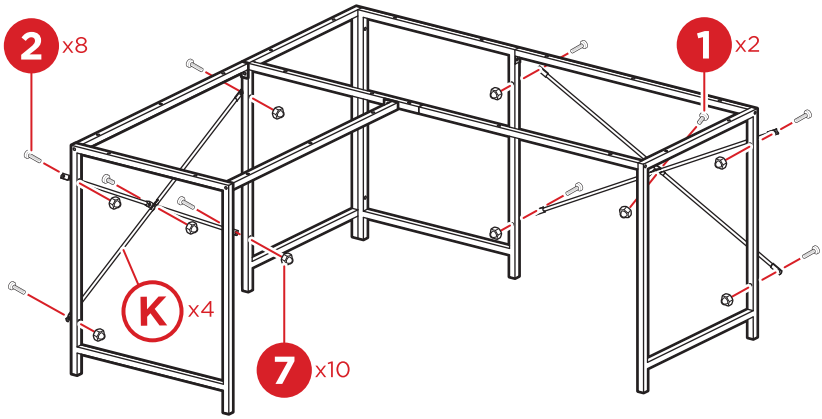

5

Locate the part B and C tabletops and attach two part 9 joiner plates with twelve part 8 screws.

Flip the frame assembly and attach the tabletop with fourteen part 3 bolts. Locate the part A tabletop and attach with eight part 3 bolts.

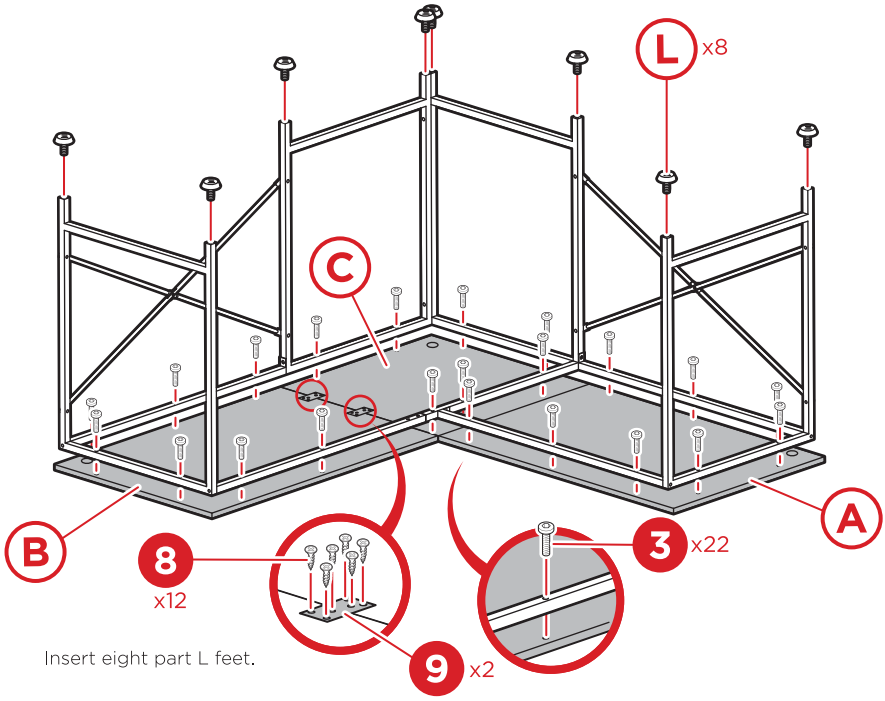

Insert eight part L feet.

PRODUCT ASSEMBLY (CORNER DESK)

6 Flip the assembly and insert three part M wire funnels into the tabletop.

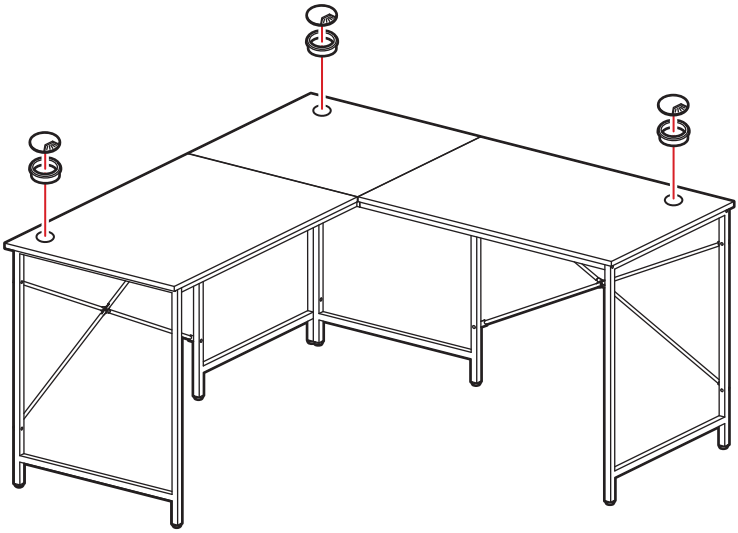

PRODUCT ASSEMBLY (LONG DESK)

1 Attach the part I female connector rod to the part J male connector rod with two part 1 bolts, then set aside.

Locate the part E middle frame panel and attach to the part F back support panel with one part 5 bolts and one part 7 end nut, then set aside.

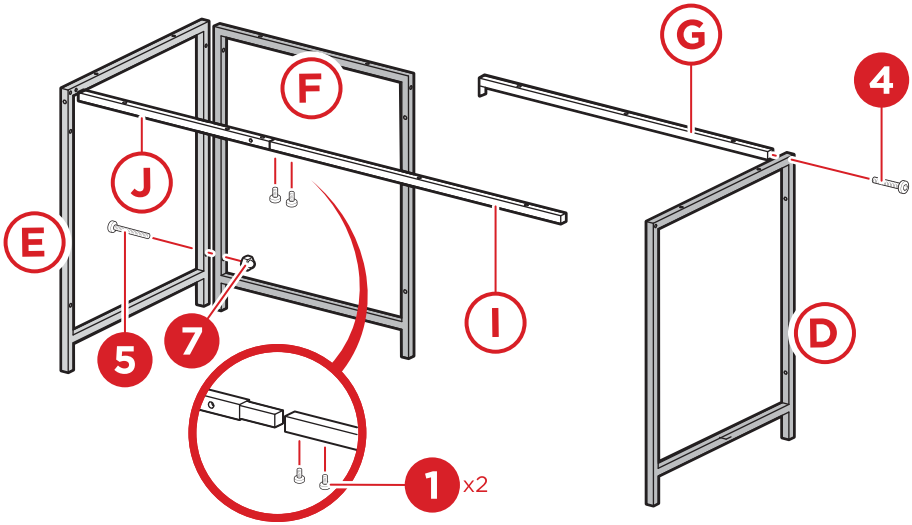

Attach one part G back connector rod to one part D end frame panel with one part 4 bolt.

PRODUCT ASSEMBLY (LONG DESK)

2

Connect the part G connector rod to the back support panel assembly with one part 2 bolt and one part 7 end nut.

Connect the part D and E panels with the male/female connector rod and secure with two part 4 bolts.

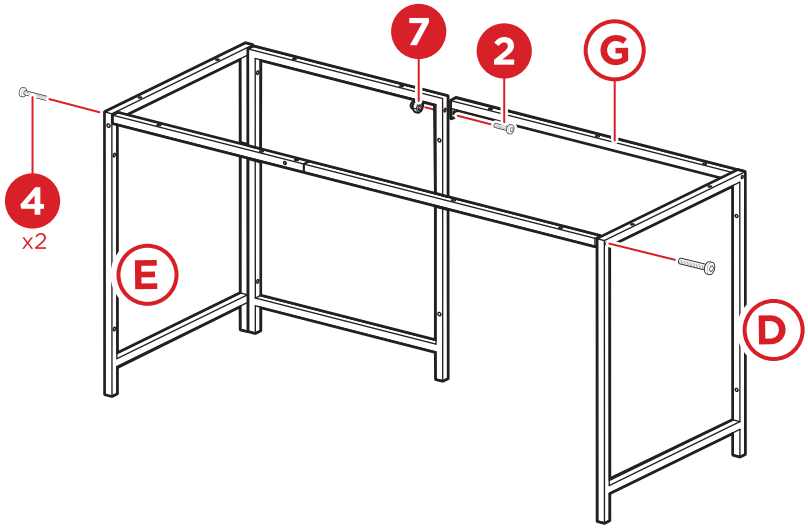

3

Attach one part G back connector rod to the part E panel with one part 6 bolt and one part 7 end nut.

Attach the part H front connector rod to the part E panel rod with one part 2 bolt and one part 7 end nut.

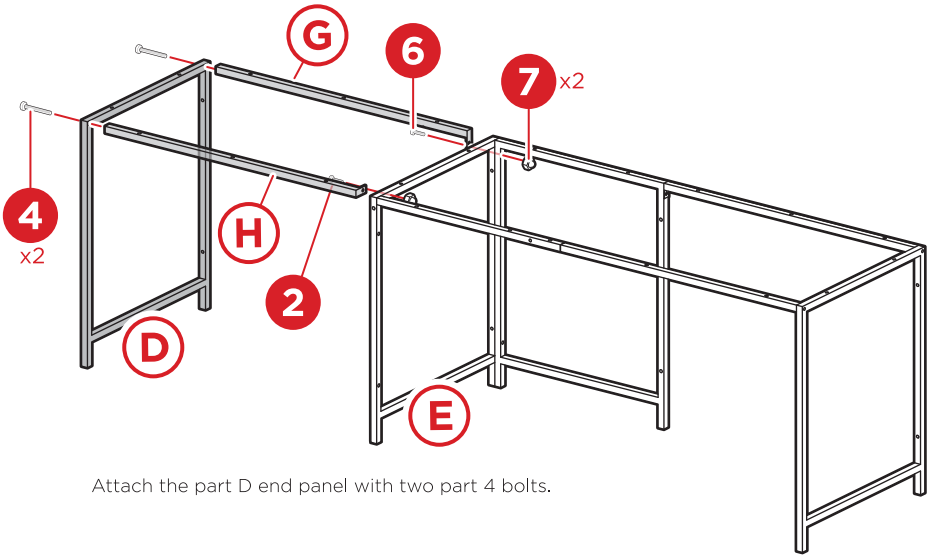

Attach the part D end panel with two part 4 bolts.

4

Secure two support rods between the part D and E panels with four part 2 bolts and four part 7 end nuts. Connect the rods with one part 1 bolt and one part 7 end nut.

Secure two support rods between the part D and F panels with four part 2 bolts and four part 7 end nuts. Connect the rods with one part 1 bolt and one part 7 end nut.

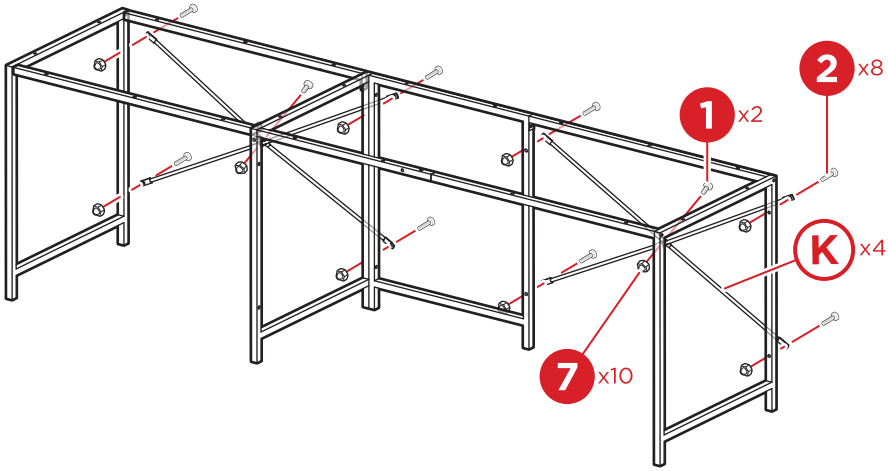

5

Locate the part B and C tabletops and attach two part 9 joiner plates with twelve part 8 screws.

Flip the frame assembly and attach the tabletop with fourteen part 3 bolts. Locate the part A tabletop and attach with eight part 3 bolts.

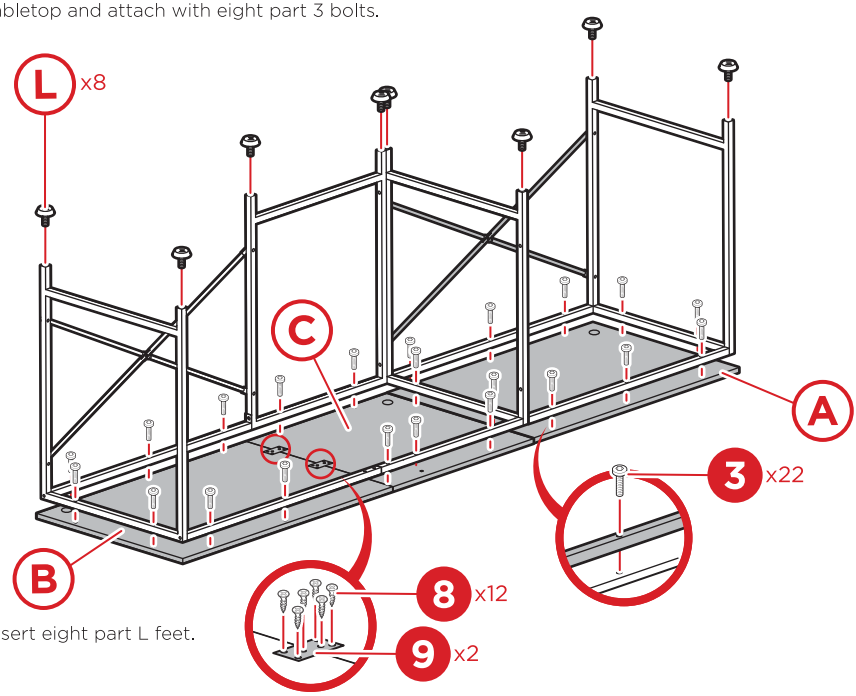

Insert eight part L feet.

PRODUCT ASSEMBLY (LONG DESK)

6 Flip the assembly and insert three part M wire funnels into the tabletop.

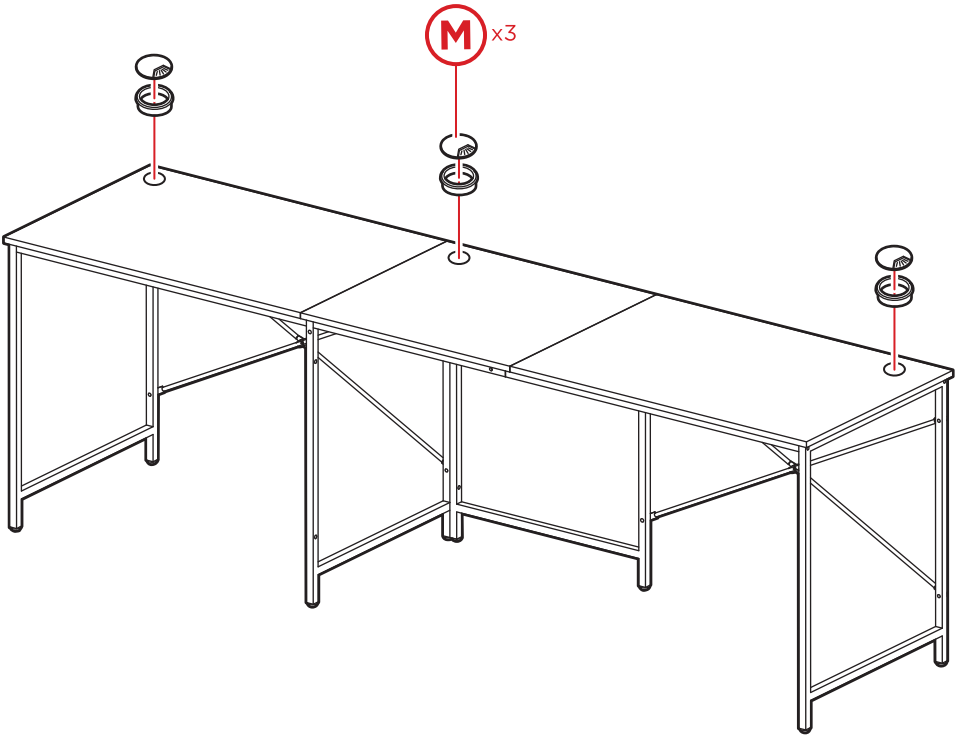

HELP CENTER

Question about your product? We're here to help. Visit us at:

help.bestchoiceproducts.com

CHAT US!

Product Assembly

Returns & Refunds

PRODUCT WARRANTY INFORMATION

All items can be returned for any reason within 60 days of the receipt and will receive a full refund as long as the item is returned in its original product packaging and all accessories from its original shipment are included. All returned items will receive a full refund back to the original payment method. All returned items will not be charged a re-stocking fee.

All returned items require an RA (Return Authorization) number, which can only be provided by a Best Choice Products Customer Service Representative when the return request is submitted. Items received without an RA may not be accepted or may increase your return processing time. Once an item has been received by Best Choice Products, refunds or replacements will be processed within 5 business days.

All returns must be shipped back to the Best Choice Products Return Center at the customer's expense. If the reason for return is a result of an error by Best Choice Products then Best Choice Products will provide a pre-paid shipping label via email. Boxes for return shipping will not be provided by Best Choice Products, and is the customer's responsibility to either use the original shipping boxes or purchase new boxes.

Pictures may be required for some returns to ensure an item is not damaged prior to its return. Items returned are not considered undamaged until they are received by Best Choice Products and verified as such. All damages to items are the customer's responsibility until the item has been received by and acknowledge by Best Choice Products as undamaged.

⚠ WARNING

Manufacturer and seller expressly disclaim any and all liability for personal injury, property damage or loss, whether direct, indirect, or incidental, resulting from the incorrect attachment, improper use, inadequate maintenance, unapproved modification, or neglect of this product.