INSTALLATION MANUAL

IQ 16-F HARDWIRE



The **IQ Hardwire 16-F** offers a cost effective way of integrating hardwired security & smoke detector zones with the IQ Panel 2. It includes backup battery charging, 500mA of 12volt auxiliary power, an onboard siren relay, built-in status LED's for each zone and support for up to 10 two-wire smoke detectors. Normally Open and Normally Closed contacts are supported as well as powered zones like motion sensors and glass break detectors.

Note: Not for use with CO detectors

TECHNICAL SPECIFICATIONS

Input Voltage: 16.0VDC Plug-In Transformer
Backup Battery: 12VDC 5AH Max (not included)
Dimensions: 16" X 14" X 3"
Operating Temperature: 32 to 122F (0 to 50C)
EOL Supervision: 4.7k Ohm fixed **or** 1k-10k Ohm depending on Resistor Mode
Input Zones: 15 N/O or N/C
Smoke Zone: 1 two-wire smoke loop, 10 detectors max. Support for System Sensor® 2W-B, 2WT-B, 2WTA-B* *Detector models should not be mixed
Auxiliary Voltage Output: 12VDC **@** 500mA Max
Tamper Zone: Used for case tamper, no resistor
Relay Contact: 60VDC/1A Max drives siren

UL REQUIREMENTS

Compatible Control Panel: The IQ Hardwire 16-F is for use with the Qolsys IQ Panel 2 only. Refer to the full IQ Panel 2 installation manual for typical installation layout, including recommended locations of the control unit, detectors and notification appliances.
Enclosure: For UL Installations, Qolsys enclosure QR0073-840 shall be used.
Listed Resistor: For UL Installations, Qolsys 4.7K Fire Resistor Part # QR0072-840 shall be used on the 2-wire fire loop at the end of line.
Wiring: For UL Installations, recognized limited energy cable shall be used.

INFORMATION

Document #: IQHW16FQG
Revision Date: 10/10/19
Qolsys Part #: QS7133-840

CONNECTS USING S ENCRYPTED 319.5 MHz

Confidential & Proprietary.
Made in Taiwan.

STEP 1: INSTALL THE HARDWARE

1. Mount the IQ Hardwire 16-F vertically in your desired location
2. Install the provided antenna into the "ANT" terminal at the top of the unit free from obstructions
3. Wire all hardwired sensors into the terminals marked Zone 1-15. Zone 16 is reserved for two-wire smoke detectors:
    a. All zones must have either a 4.7k resistor (included) or a 1k - 10k resistor installed, depending on the which Resistor Mode is selected (see Troubleshooting on page 3), in either the N/O (parallel) or N/C (series) position.
    b. Wire the positive and negative leads from powered devices, such as motion sensors and glass break detectors, into the "AUX" (+) and "GND" (-) terminals to power the devices.
    c. Wire a tamper switch into the tamper terminals without using a resistor. If a tamper switch is not being used, permanently shunt the zone with a piece of wire.
    d. Optional: Wire the hardwired siren (60VDC/1A Max, see wiring diagram)
4. Plug in a 5Ah lead acid backup battery with included battery leads (battery not included)
5. Using the provided 16vDC power supply, connect the leads to the terminals marked "+16.0V" & "GND", then plug then supply into a wall outlet. *NOTE: dashed wire is positive.*



If mounting inside a metal can, the antenna must extend outside the enclosure to ensure RF communication

RESISTOR MODES: Change between two distinct resistor modes. The default mode is "UL Mode" where 4.7k resistors are required on each zone. In this mode the Processor LED blinks rapidly (8 times per second).

If UL installation is not required, "EOL Resistor Learning" can be enabled. In this mode the Processor LED blinks slowly (1 time per second) and any resistor value from 1k to 10k can be used. *NOTE: Zone 16 is dedicated for 2-wire smokes and requires a 4.7k resistor regardless of Resistor Mode.*

To change modes, power down the unit (battery & AC), hold down "EOL LEARN" for 8 seconds while re-applying power to the device. Processor, RF Xmit and EOL CAL LED's will begin to flash rapidly indicating that the mode has been changed.

INSTALLATION MANUAL

STEP 2: PAIR THE IQ HARDWIRE 16 WITH THE IQ PANEL 2

Note: This step is required and allows the IQ Panel 2 to control the wireless Siren Relay, reset the two-wire smoke detectors after a fire event and supervise the battery, AC power status, aux power out & tamper. The IQ Panel 2 must have the Tx/Rx 319.5 MHz SRF card installed with RF PIC 11.1.4 G2 or higher.

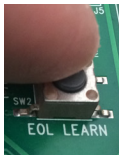

Press and hold "EOL LEARN" for 1-2 secs. *(all Zone LED's flash and then turn off)*



EOL CAL LED will turn ON. This indicates the module is now in "Auto Learn" mode



Place your IQ Panel 2 in "Auto Learn" mode:

Settings/Advanced Settings/ Installation/Devices/Security Sensors/Auto Learn Sensor

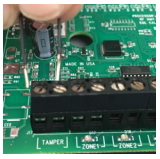

Trip the module by opening the tamper switch or by removing jumper installed in Step 1 from the "Tamper" terminals, then replace

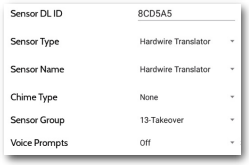

Follow the onscreen prompts on the IQ Panel to finish the enrolling process. The IQ Hardwire 16-F should be learned in as a "Hardwire Translator"

STEP 3: PAIRING INDIVIDUAL ZONES/SENSORS

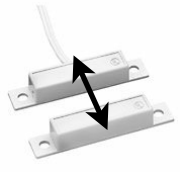

Trip (Open/Close) each hardwired zone one at a time.

Two-wire smoke detectors should be activated via the test button on the detector or with a can of smoke

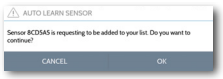

The IQ Panel 2 will "chime" indicating it has found a new sensor. Touch "OK" to proceed.



Customize the sensor type and settings as desired. Repeat for each zone.

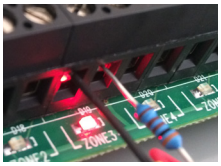

When a sensor has been tripped, the Zone LED will illuminate and stay on until you exit "Auto Learn" mode.



Once all desired zones have been learned, press the "EOL LEARN" button to exit "Auto Learn" mode. The EOL CAL LED will turn OFF indicating you are no longer in "Auto Learn" mode and all zone LED's will turn OFF.

TROUBLESHOOTING

EOL LEARN Button: Enters and exits "Auto Learn" mode

MEMORY RESET Button: Clears memory and resets the device to factory defaults when held for 3 seconds during power up

PROCESSOR LED: Flashes during normal operation

RF XMIT LED: Flashes when RF transmission is being sent

EOL CAL LED: Flashes when no zones have been learned in yet. ON when device is in "Auto Learn" mode. OFF when device is in "Normal Operation Mode"

ZONES 1-15 LEDs: OFF while in "Auto Learn" mode unless a zone has been learned in or tripped, then ON. OFF while in "Normal Operation Mode" unless a zone is open, then ON or if a zone is tampered, then FLASHES

ZONE 16 SMOKE LED: ON when smoke detector is in alarm

HOW TO CLEAR THE MEMORY: Power down the unit by unplugging the battery leads and the power supply. Hold down "Memory Reset" for 3 seconds while re-applying power to the device. Processor, RF Xmit and EOL CAL LED's will begin to flash rapidly indicating that the module has been reset.

NOTE: It is recommended to Clear the Memory when installing the unit for the first time or when switching between Resistor Modes if devices have previously been enrolled into the IQ Hardwire 16

RESISTOR MODES: Change between two distinct resistor modes. The default mode is "UL Mode" where 4.7k resistors are required on each zone. In this mode the Processor LED blinks rapidly (8 times per second).

If UL installation is not required, "EOL Resistor Learning" can be enabled. In this mode the Processor LED blinks slowly (1 time per second) and any resistor value from 1k to 10k can be used.

NOTE: Zone 16 is dedicated for 2-wire smokes and requires a 4.7k resistor regardless of Resistor Mode.

To change modes, first power down the unit by unplugging the battery leads and the power supply. Next hold down "EOL LEARN" for 8 seconds while re-applying power to the device. Processor, RF Xmit and EOL CAL LED's will begin to flash rapidly indicating that the mode has been changed

INSTALLATION MANUAL

IQ 16-F HARDWIRE

WIRING DIAGRAM

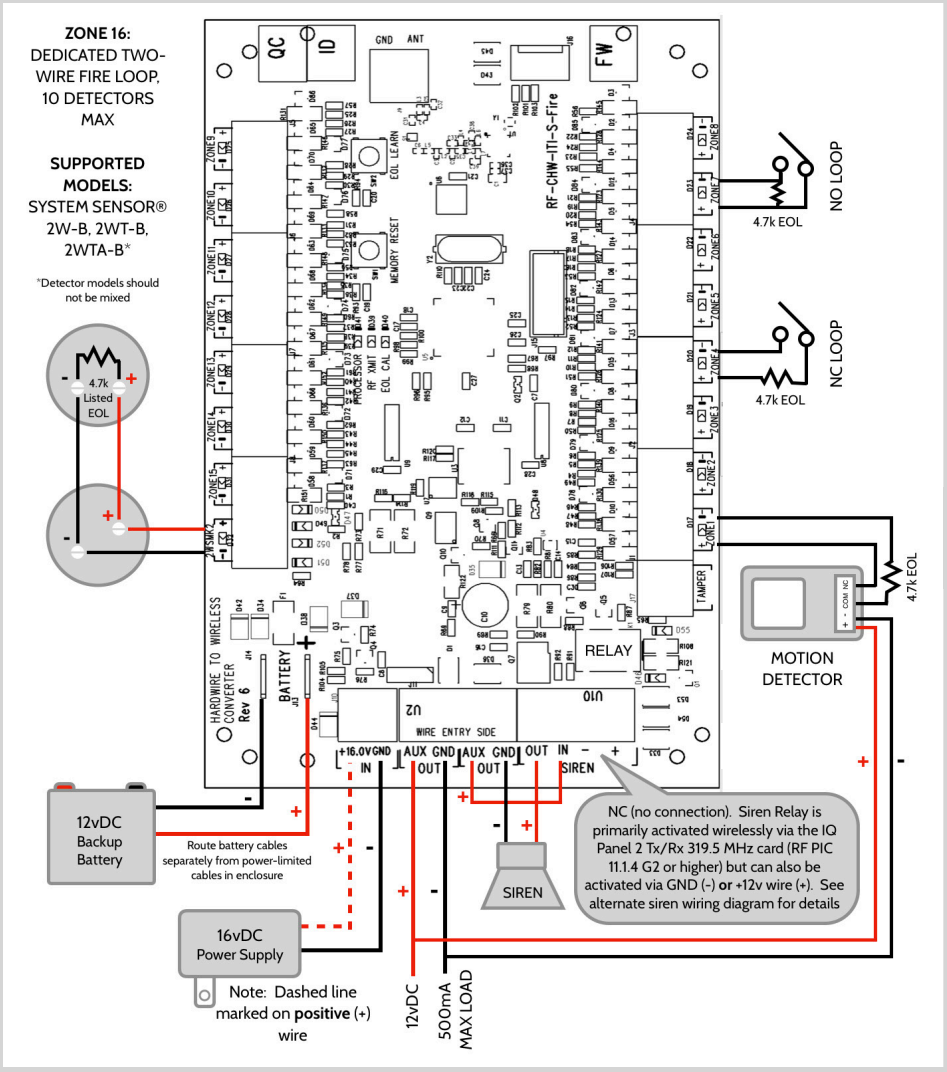

ALT SIREN WIRING - A

Optional Siren Relay wiring using GND (-) and IQ Panel 2 "EXT Siren" output*

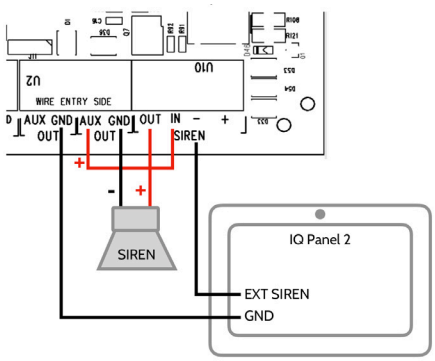

*Not intended for UL Installations

ALT SIREN WIRING - B

Optional Siren Relay wiring using 12v (+) and IQ Panel (GEN1) "Buzzer" output*

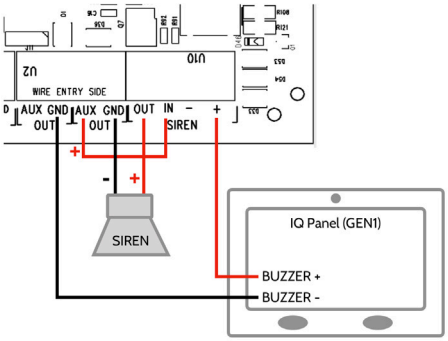

*Not intended for UL Installations

c UL us LISTED

UL 1023, UL985, ULC 1023 & ULC S545 LISTED

For Service Contact

COMPANY NAME: _____

ADDRESS: _____

PHONE: _____

This device complies with part 15 of the FCC Rules. Operation is subject to the following two conditions: (1) This device may not cause harmful interference, and (2) this device must accept any interference received, including interference that may cause undesired operation. Changes or modifications not expressly approved by the party responsible for compliance could void the user's authority to operate the equipment.

This device complies with Industry Canada licence-exempt RSS standard(s). Operation is subject to the following two conditions: (1) this device may not cause interference, and (2) this device must accept any interference, including interference that may cause undesired operation of the device.

Cet appareil est conforme avec Industrie Canada exempts de licence standard RSS (s). Son fonctionnement est soumis aux deux conditions suivantes: (1) cet appareil ne doit pas provoquer d'interférences et (2) cet appareil doit accepter toute interférence, y compris celles pouvant causer un mauvais fonctionnement de l'appareil.