RANGE
OUTDOOR LIVING

Manufactured by:
Range Outdoor Living
3305 Airport Drive, Pittsburg, KS 66762
833-689-8428

Basepoint Business Centre: Rivermead Drive,Westlea, Swindon SN5 7EX Phone: 0800-118-2476
J.P. Coenstraat 7, The Bridge, The Hague, 2595 WP, Netherlands Phone: 08005678990

EMORY CORNER OUTDOOR KITCHEN ISLAND AND BAR - LEFT

MODEL #: 2504196B, 2601178B

⚠ WARNING
Cancer and Reproductive Harm
www.P65Warnings.ca.gov



Please visit www.rangeoutdoorliving.com
For the most up to date assembly manual, to register your product, or to order replacement parts Para obtener instrucciones en español, visite www.rangeoutdoorliving.com

---

BILT®

EASY STEP-BY-STEP
3D INTERACTIVE INSTRUCTIONS
DOWNLOAD THE FREE APP

Download on the App Store | GET IT ON Google Play

OWNER'S MANUAL - BASIC SETUP DIMENSIONS & ASSEMBLY NOTES

It is critically important that you start with square and level footings or concrete pad to attach your structure.

- **Pay close attention to the items needed for each step. Make sure you are using the correct hardware for each step. Using incorrect hardware may result in improper assembly**
- **Remember to double check for underground utilities and overhead electrical lines**

Post mounts are provided with your structure which allows you to permanently install your structure to a pre-existing or new wood or concrete surface. See Anchor Instructions for further details and recommendations.

- **The hardware to attach the post mounts to the structure is included.**
- **The hardware to mount the structure permanently to a concrete surface is included.**
- **The hardware to mount the structure permanently to a wood deck is NOT included and will need to be purchased separately. You must ensure there is ample structural support under the deck before permanently attaching.**

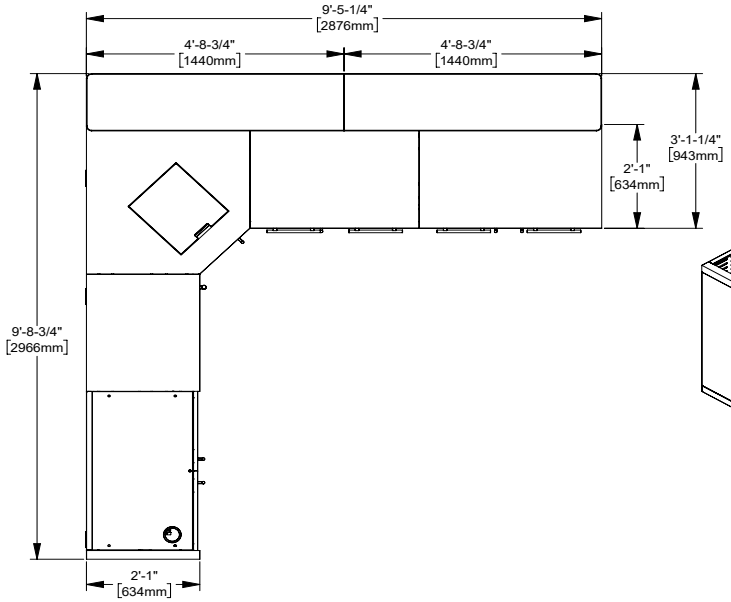

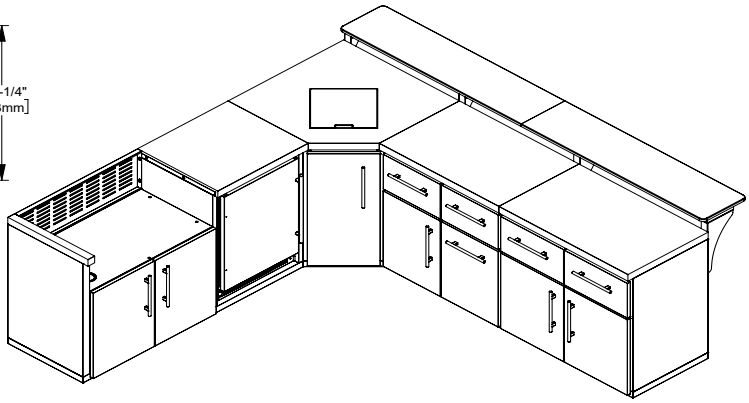

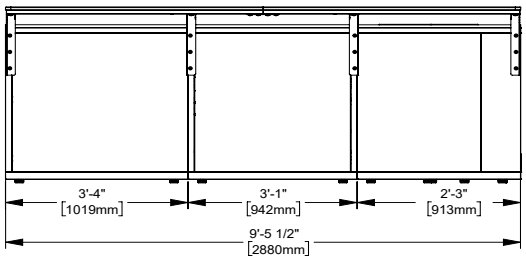

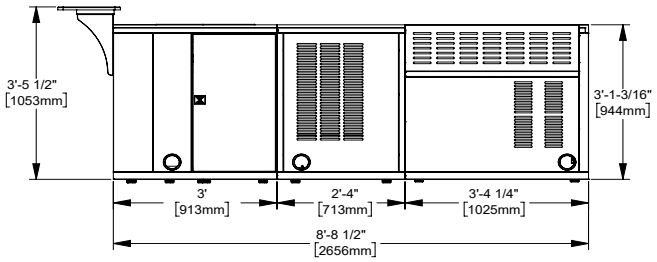

IMPERIAL MEASUREMENTS ROUNDED TO THE NEAREST 1/4"

OWNER'S MANUAL - UTILITY LAYOUT

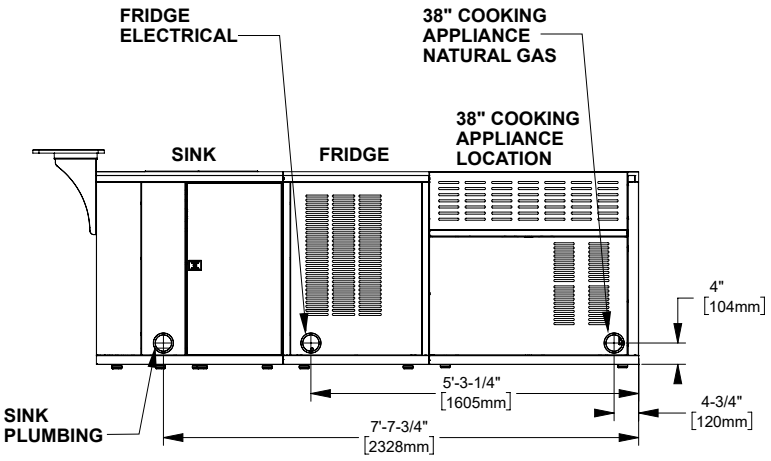

LEFT SIDE VIEW

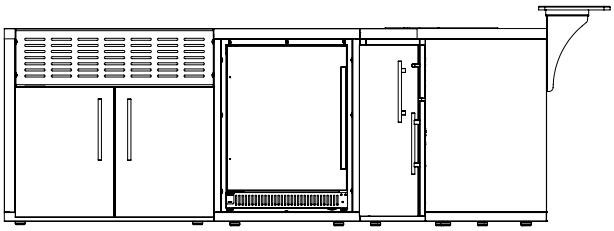

RIGHT SIDE VIEW

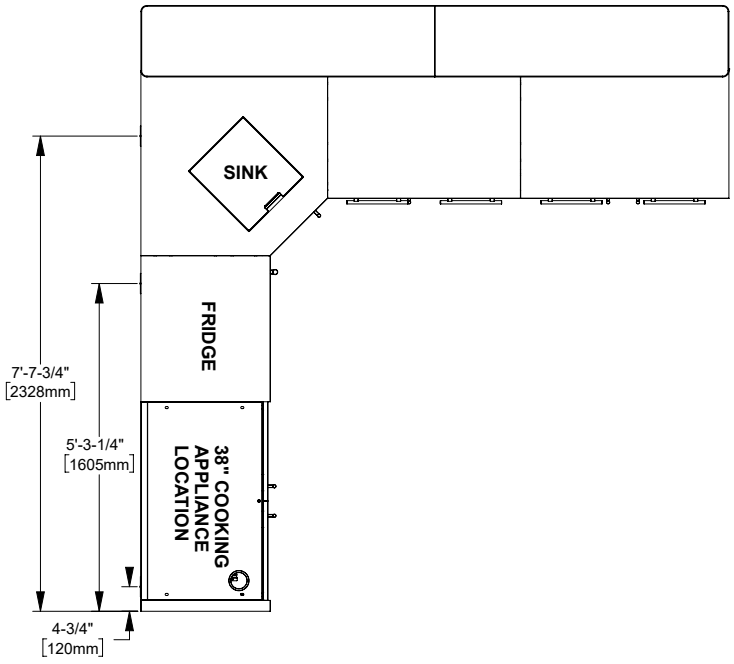

TOP SIDE VIEW

IMPERIAL MEASUREMENTS ROUNDED TO THE NEAREST 1/4"

OWNER'S MANUAL - PARTS IDENTIFICATION

METAL COMPONENTS (NOT TO SCALE)

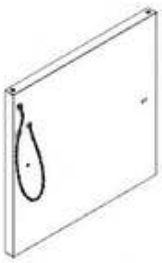

S6 CABINET SIDE PANEL ASSEMBLY M - A4M03586
(x1) 23 3/8"x22 7/8"x1 3/8" (35x581x593)



S17 CABINET SIDE PANEL ASSEMBLY M - A4M05647
(x1) 33 3/8"x23 3/8"x1 3/8" (35.00x593.20x847.20)

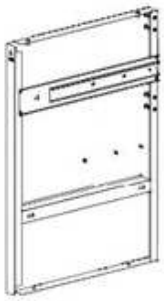

S24 CABINET SIDE PANEL ASSEMBLY M - A4M04705
(x1) 33 3/8"x23 3/8"x2 3/16" (56.2x593x847)



S27 CABINET SIDE PANEL ASSEMBLY - A4M04835
(x1) 33 7/16"x23 3/8"x2 13/16" (71.00x594.00x849.00)

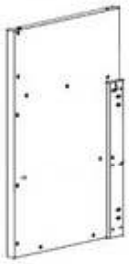

S28 CABINET SIDE PANEL ASSEMBLY - A4M04832
(x1) 33 7/16"x23 3/8"x2 1/16" (53x594x849.7)



S29 CABINET SIDE PANEL ASSEMBLY - A4M04833
(x1) 33 3/8"x23 3/8"x1 3/8" (35.00x594x848.20)



S30 CABINET CORNER PANEL ASSEMBLY - A4M04847
(x1) 33 3/8"x8 11/16"x8 11/16" (220.00x220.00x848.00)



S31 CABINET SIDE PANEL ASSEMBLY - A4M04838
(x1) 33 3/8"x23 3/8"x1 15/16" (49.00x594x848.20)



S32 CABINET SIDE PANEL ASSEMBLY - A4M04837
(x1) 33 3/8"x23 3/8"x1 3/8" (35.00x594.00x848.20)



S33 CABINET SIDE PANEL ASSEMBLY - A4M04836
(x1) 33 3/8"x23 3/8"x1 15/16" (49.00x594x848)

OWNER'S MANUAL - PARTS IDENTIFICATION

METAL COMPONENTS (NOT TO SCALE)

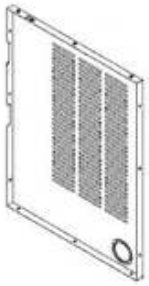

G4 CABINET BACK PANEL ASSEMBLY - A4M03599
(x1) 25 5/16"x33 3/8"x1 3/16" (30x847x643)

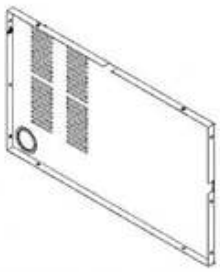

G10 CABINET BACK PANEL ASSEMBLY - A4M03055
(x1) 1 3/16"x22 7/8"x38 3/16" (30x581x970)

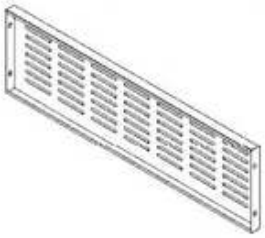

G11 VENTILATION PANEL - A4M03056
(x1) 1 5/16"x11 3/16"x38 3/16" (33x284x970)



G13 CABINET BACK PANEL ASSEMBLY - A4M04715
(x1) 33 3/8"x8 1/2"x1 3/16" (30x215x848)



G14 CABINET BACK PANEL ASSEMBLY - A4M04716
(x1) 27 5/16"x33 3/8"x1 3/16" (30x847x693)

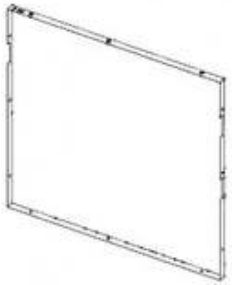

G15 CABINET BACK PANEL ASSEMBLY - A4M04707
(x1) 34 5/16"x33 3/8"x1 3/16" (30x847x1049)

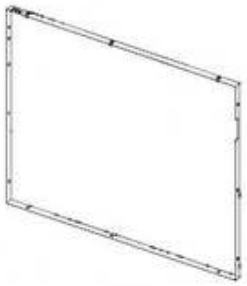

G16 CABINET BACK PANEL ASSEMBLY - A4M04839
(x1) 38 3/4"x33 3/8"x1 3/16" (30.00x847.20847.20x984.00)

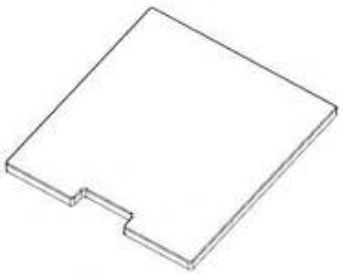

M5 SINK COVER COUNTERTOP - A4M05949
(x1) 11/16"x14 3/4"x16 5/16" (18x375x415)



M12 COUNTERTOP - A4M05955
(x1) 37 3/16"x24 15/16"x1 15/16" (50x634x944)



M13 COUNTERTOP - A4M05953
(x1) 28 1/8"x24 15/16"x1 15/16" (50x634x715)

OWNER'S MANUAL - PARTS IDENTIFICATION

METAL COMPONENTS (NOT TO SCALE)

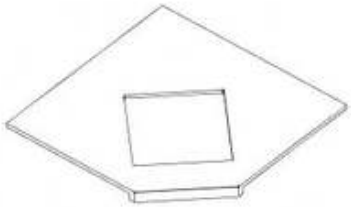

M14 COUNTERTOP - A4M05954
(x1) 36"x36"x1 15/16" (50x914x914)



M15 COUNTERTOP - A4M05958
(x1) 56 11/16"x13 3/4"x11/16" (18x350x1440)



M22 COUNTERTOP - A4M05956
(x1) 56 11/16"x13 3/4"x11/16" (18x350x1440)



M16 COUNTERTOP - A4M05959
(x1) 24 15/16"x2 1/16"x1 15/16" (50x53x634)

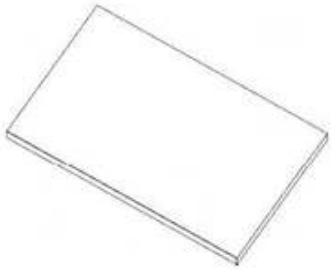

M18 COUNTERTOP - A4M05960
(x1) 40 3/16"x24 15/16"x1 15/16" (50x634x1020)

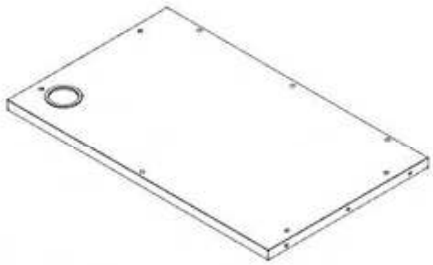

T13 TABLETOP ASSEMBLY - A4M04668
(x1) 1 1/4"x23 3/8"x38 3/16" (32x594x970)

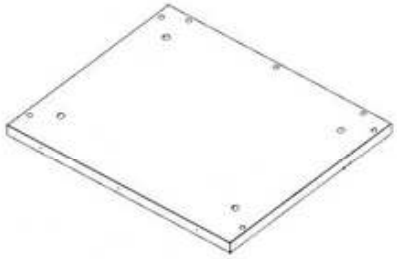

T14 CABINET TABLETOP PANEL ASSEMBLY - A4M04701
(x1) 28 1/8"x24 1/8"x1 1/4" (32x612x715)

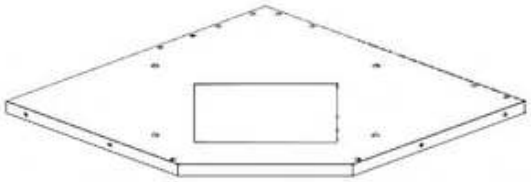

T15 CABINET TABLETOP FRAME - A4M04713
(x1) 36"x914.00x1 1/4" (32x914x914)

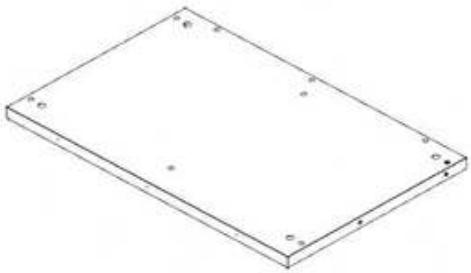

T16 CABINET TABLETOP ASSEMBLY - A4M04708
(x1) 37 3/16"x24 1/8"x1 1/4" (32x612x944)

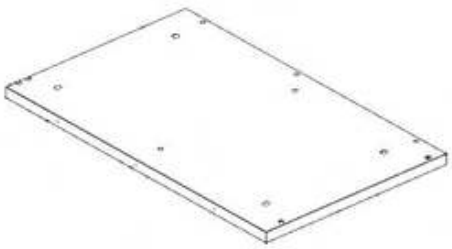

T17 CABINET TABLETOP PANEL ASSEMBLY - A4M04842
(x1) 39 7/16"x24 1/8"x1 1/4"1 1/4" (32.00x612.00x1001.00)

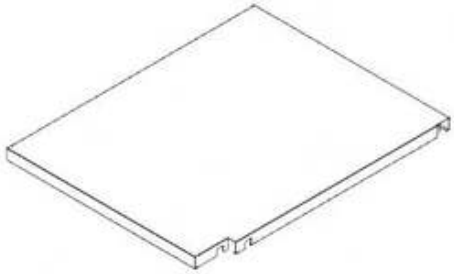

L2 CABINET SHELF ASSEMBLY - A4M03589
(x1) 23 1/4"x18 3/8"x1" (25x467x591)

OWNER'S MANUAL - PARTS IDENTIFICATION

METAL COMPONENTS (NOT TO SCALE)

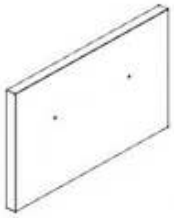

D3 CABINET DRAWER PANEL ASSEMBLY - A4M03569
(x2) 17 3/4"x10 1/4"x15/16" (24x260x451)

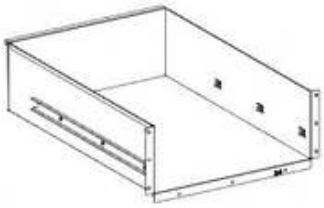

D4 CABINET DRAWER BODY ASSEMBLY - A4M03571
(x2) 22 1/4"x16 1/16"x6 7/16" (164x408x565)



D6 CABINET DOOR ASSEMBLY L - A4M03577
(x1) 22 1/4"x17 13/16"x15/16" (24x452x565)



D7 CABINET DOOR ASSEMBLY L - A4M03587
(x1) 24 13/16"x19 1/16"x15/16" (24x484x630)



D8 CABINET DOOR ASSEMBLY R - A4M03590
(x1) 24 13/16"x19 1/16"x15/16" (24x484x630)

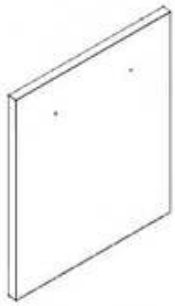

D9 TRASH CAN PANEL ASSEMBLY - A4M03608
(x1) 22 1/4"x17 3/4"x15/16" (24x451x565)



D17 CABINET DOOR ASSEMBLY - A4M03682
(x1) 33 7/8"x18 1/4"x15/16" (23x463x860)

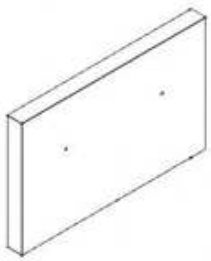

D18 DRAWER PANEL ASSEMBLY L - A4M03696
(x1) 19 9/16"x10 1/4"x15/16" (24x260x498)

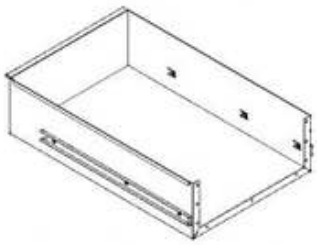

D19 DRAWER BODY ASSEMBLY - A4M03698
(x2) 22 1/4"x17 3/4"x5 3/4" (145x450x565)



D20 DOOR PANEL ASSEMBLY L - A4M03701
(x1) 22 1/4"x19 5/8"x15/16" (24x498.28x565.50)

OWNER'S MANUAL - PARTS IDENTIFICATION

METAL COMPONENTS (NOT TO SCALE)



D21 DOOR PANEL ASSEMBLY R - A4M03703
(x1) 22 1/4"x19 5/8"x15/16" (24x498.26x565.50)

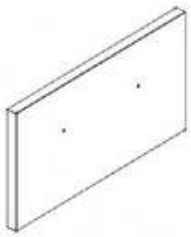

D22 DRAWER PANEL ASSEMBLY R - A4M03706
(x1) 19 9/16"x10 1/4"x15/16" (24x260x498)



D23 CABINET FRONT DOOR ASSEMBLY - A4M04720
(x1) 33 1/16"x16 1/16"x15/16" (24x408x840)

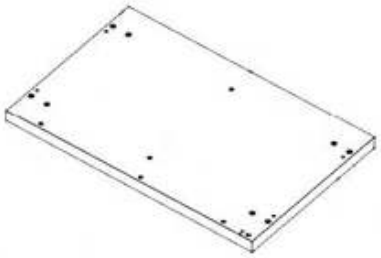

F3 CABINET FLOOR PANEL ASSEMBLY - A4M03560
(x1) 37 3/16"x23 3/8"x2 5/8" (66x594x944)

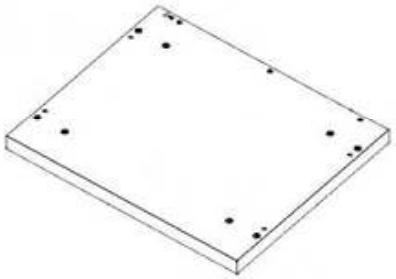

F4 CABINET FLOOR PANEL ASSEMBLY - A4M03595
(x1) 28 1/8"x23 3/8"x2 5/8" (66x594x715)

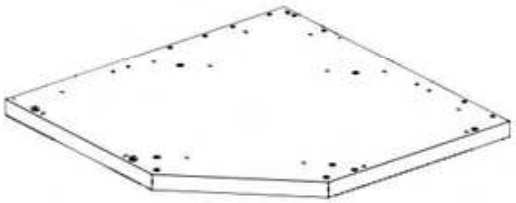

F9 CABINET FLOOR PANEL ASSEMBLY - A4M04702
(x1) 36"x36"x2 5/8" (66x914x914)

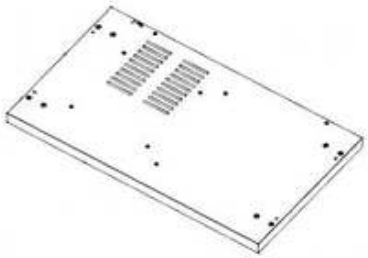

F10 CABINET FLOOR PANEL ASSEMBLY - A4M04834
(x1) 2 5/8"x23 3/8"x40 3/8" (66x594x1025)

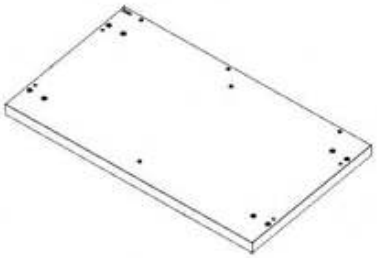

F11 CABINET FLOOR PANEL ASSEMBLY - A4M04840
(x1) 40 3/16"x23 3/8"x2 5/8" (66x594x1020)



L8 SHELF - A4M05644
(x1) 23 1/4"x16 1/4"x1" (25x412x591)

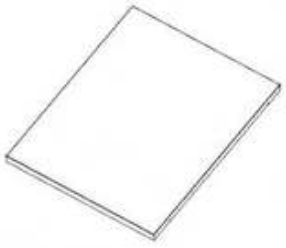

L9 SHELF - A4M05645
(x1) 23 1/4"x18 1/4"x1" (25x463x591)

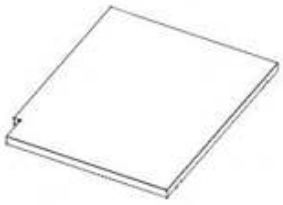

L10 SHELF - A4M05646
(x1) 23 1/4"x19"x1" (25x482x591)

OWNER'S MANUAL - PARTS IDENTIFICATION

METAL COMPONENTS (NOT TO SCALE)

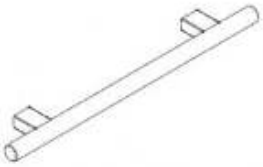

H2 STAINLESS STEEL HANDLE - A4M03024
(x11) 5/8"x1 9/16"x11 13/16" (16x40x300)

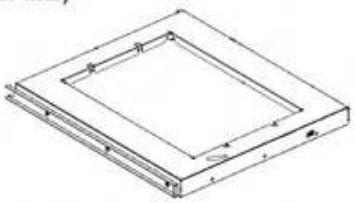

H3 TRASH CAN BRACKET ASSEMBLY - A4M03610
(x1) 18 1/16"x15 13/16"x1 3/8" (35x401x458)

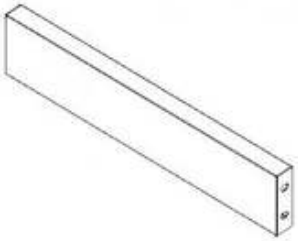

H4 CABINET HORIZONTAL BEAM ASSEMBLY - A4M03575
(x4) 16 1/4"x3 3/8"x1" (25x85x413)



H11 DRAWER FIXING PIECE ASSEMBLY - A4M03692
(x1) 5 3/8"x1 1/16"x11/16" (17x27x137)



H12 HORIZONTAL BEAM ASSEMBLY - A4M03695
(x4) 18 1/4"x2 15/16"x1" (25x75x464)

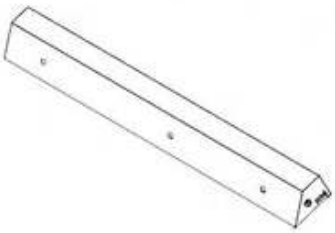

H14 CABINET FRONT DOOR BRACKET ASSEMBLY - A4M04717
(x1) 33 3/8"x3 1/4"x1 3/4" (45x83x848)

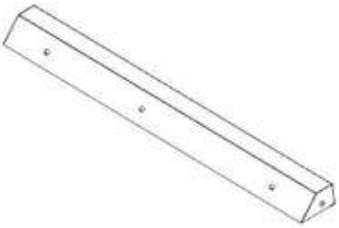

H15 CABINET FRONT DOOR HINGE BRACKET ASSEMBLY - A4M04718
(x1) 33 3/8"x3 1/4"x1 3/4" (45x83x848)

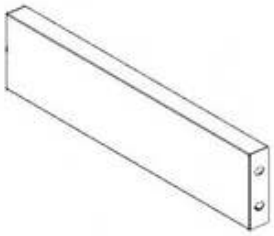

H16 CABINET HORIZONTAL BEAM ASSEMBLY - A4M04719
(x1) 14 5/8"x3 3/8"x1" (25x85x372)

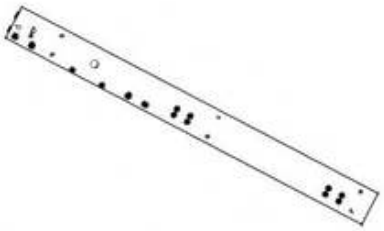

H17 HINGE CHANEL ASSEMBLY - A4M04841
(x1) 33 3/8"x2 15/16"x11/16" (18.00x74.80x847.00)

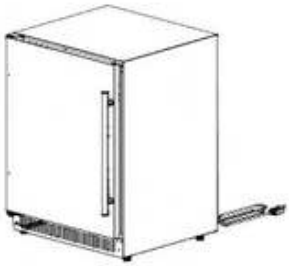

9230132 OUTDOOR KITCHEN FRIDGE - LEFT OPEN
(x1)



A4M03025 FULL OVERLAY HINGE
(x12)



A4M03151 GARDEN HOSE ADAPTER
(x1)

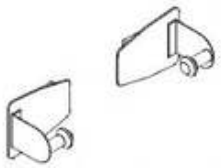

A4M02290 MAGNETIC PAPER TOWEL HOLDER
(x1)

OWNER'S MANUAL - PARTS IDENTIFICATION

METAL COMPONENTS (NOT TO SCALE)



A2 MAGNET BRACKET - A4M03026
(x7) 1"x1 1/4"x3 1/8" (25x31x80)

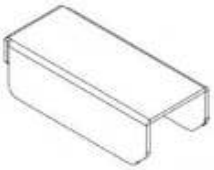

A5 SHELF BRACKET - A4M03141
(x14) 5/8"x7/8"x2 1/16" (16x22x53)

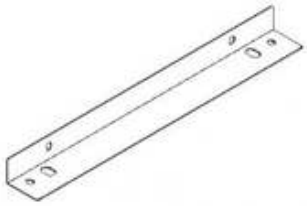

A6 ANGLED BRACKET - A4M03053
(x4) 1 3/8"x1 15/16"x17 1/8" (35x50x435)



A9 HOSE BRACKET ASSEMBLY - A4M03060
(x1) 1 1/4"x1 7/16"x2 9/16" (31x36x65)

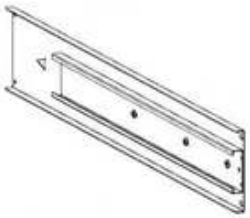

A10 SLIDE BRACKET ASSEMBLY - A4M03083
(x1) 15/16"x3 3/8"x22 5/8" (23x85x575)



A11 TRIANGLE PANEL - A4M03086
(x2) 13/16"x13 3/4"x13 3/4" (20x350x350)

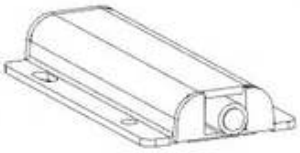

A12 DOOR STOPPER - A4M04128
(x1) 3 11/16"x1 3/4"x1/2" (13x45x94)



A13 GAS TANK HOLDER ASSEMBLY - A4M03047
(x1) 1 15/16"x12 7/8"x14 3/4" (49x327x374)

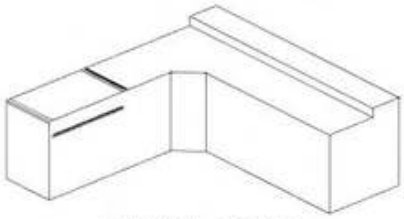

A6P01439 COVER
(x1)



A14 COUNTERTOP BRACKET ASSEMBLY - A4M04846
(x1) 24 3/16"x1 3/8"x1 1/4" (31x35x614)

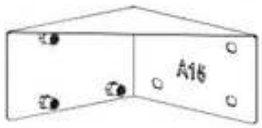

A15 DOOR STOPPER BRACKET ASSEMBLY - A4M04480
(x1) 3 15/16"x3 3/4"1 15/16" (50x95x100)

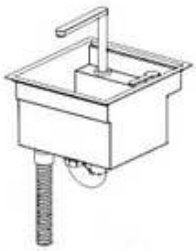

A16 SINK ASSEMBLY - A4M03143
(x1) 15 1/8"x15 5/16"x16 7/8" (384x389x429)

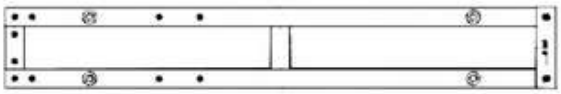

A17 SUPPORT FRAME ASEEMBLY - A4M04723
(x2) 54 1/2"x8 1/4"x1" (25x210x1384.8)

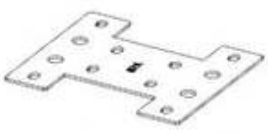

A18 SUPPORT FRAME CONNECTING PIECE - A4M04724
(x1) 1/8"x7 1/16"x8 1/4" (3x180x210)

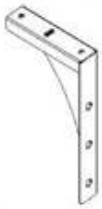

A19 TRIANGLE BRACKET L - A4M04727
(x2) 14 11/16"x7 7/8"x1 15/16" (50x200.00x373.1)



A20 TRIANGLE BRACKET R - A4M04728
(x2) 14 11/16"x7 7/8"x1 15/16" (50x200x373)

OWNER'S MANUAL - PARTS IDENTIFICATION

HARDWARE COMPONENTS

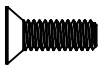

H101185 | PHILLIPS FLAT HEAD
(x72)| 8-32x.5

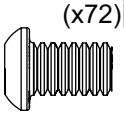

H101292 | TORX PAN HEAD
(x30) | 1/4-20x13/32"



H101289 | PAN HEAD SCREW
(x85) | 8-32x1/2" SS

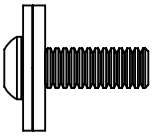

H101202 | TORX PAN HEAD
(x174) | 1/4-20x3/4 ASSY

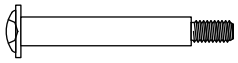

H101307 | SHOULDER BOLT
(x22) | 8-32x30mm SS

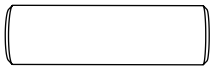

H101404 | TORX SOCKET SCREW
(x4) | 5/16-18x1 1/16"

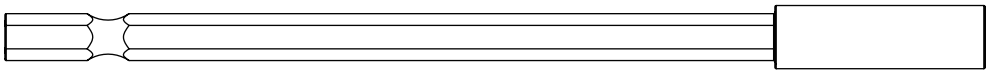

H101278 | MAGNETIC DRIVER EXTENSION
(x1) | 6"

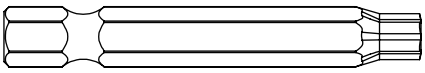

H100147 | TORX BIT
(x1) | T-30

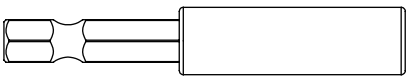

H101100 | MAGNETIC DRIVER
(x1) |

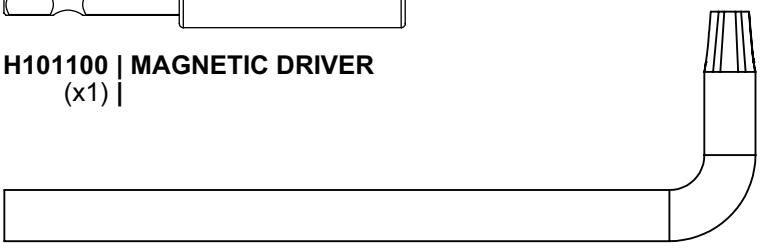

H100114 | TORX BIT
(x1) | T-30



H101287 | PAN HEAD SCREW
(x6) | 8-32x1" SS

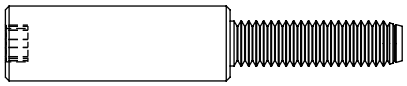

H101103 | TORX SOCKET SCREW
(x39) | 1/4-20

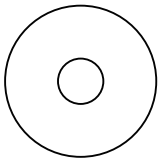

H101053 | STEEL WASHER
(x26)| 6x20

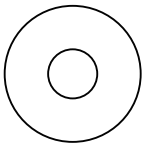

H101054 | SEALANT WASHER
(x26) | 6.5x18

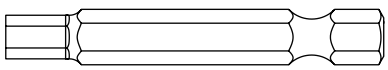

H101294 | HEX DRIVER
(x1) |

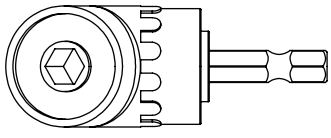

H101114 | RIGHT ANGLE
(x1) | **DRILL ADAPTER**

PRE-ASSEMBLY STEP 1 - SORTING PARTS

It is critical for ease of assembly that you take the time to sort and organize the parts and hardware.

METAL PARTS:

- Organize metal parts by the three-digit, alpha-numeric number stamped on each part (ex. P01).
- If there are multiple parts with the same stamped number, stack those pieces together.
- Stamps can be found on the flat surface of the parts or on the end of the parts.
- Allow yourself plenty of room - the parts can take up a significant amount of space.

WOOD PARTS:

- Organize wood parts by the three-digit, alpha-numeric number stamped on each board (ex. P01).
- If there are multiple boards with the same stamped number, stack those pieces together.
- Stamps can be found on the flat surface of the boards or on the end of the boards.
- Allow yourself plenty of room - the wood pieces can take up a significant amount of space.

NOTE: CARTONS ARE NOT ORGANIZED BY PART OR STEP NUMBER.



HARDWARE PARTS:

- We recommend that you have a separate table to organize the hardware.
- Hardware bags are printed with a seven-digit, alpha-numeric part number.
- You can organize your hardware by part number or group by hardware type (e.g. bolts, nuts, etc.).
- During assembly you only need to reference the last four digits of the number.



PRE-ASSEMBLY STEP 2 - TOOLS REQUIRED



Cordless Drill or
Electric Drill



Drill Attachments:
Phillips Head



1/8", 3/16", 3/8" &
7/16" Drill Bits



Phillips Screw Driver



Open End Wrench
7/16"



3/8" Drive Ratchet, 1/2" &
7/16" STD Sockets 1/2" & 7/16"
Deep Sockets



Claw Hammer



Rubber Mallet -
Optional



Tape Measure

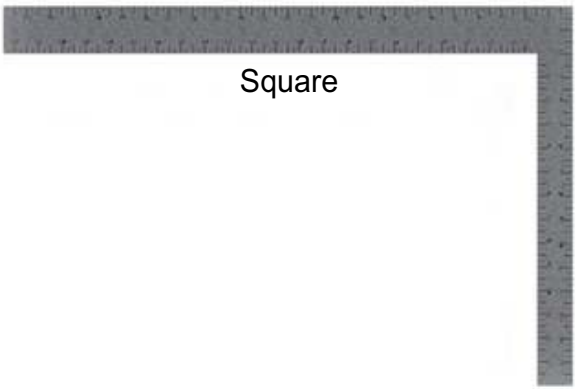

Square



Level 24"

PRE-ASSEMBLY STEP 3 - CHOOSE YOUR ASSEMBLY METHOD

<u>There are several types of assembly instructions available to you.</u>

1. **Printed Assembly Manual included with your set**
2. **BILT APP - 3D interactive instructions**
3. **Combination of the Printed Manual and BILT APP (Note: Step numbers can differ between the two methods)**

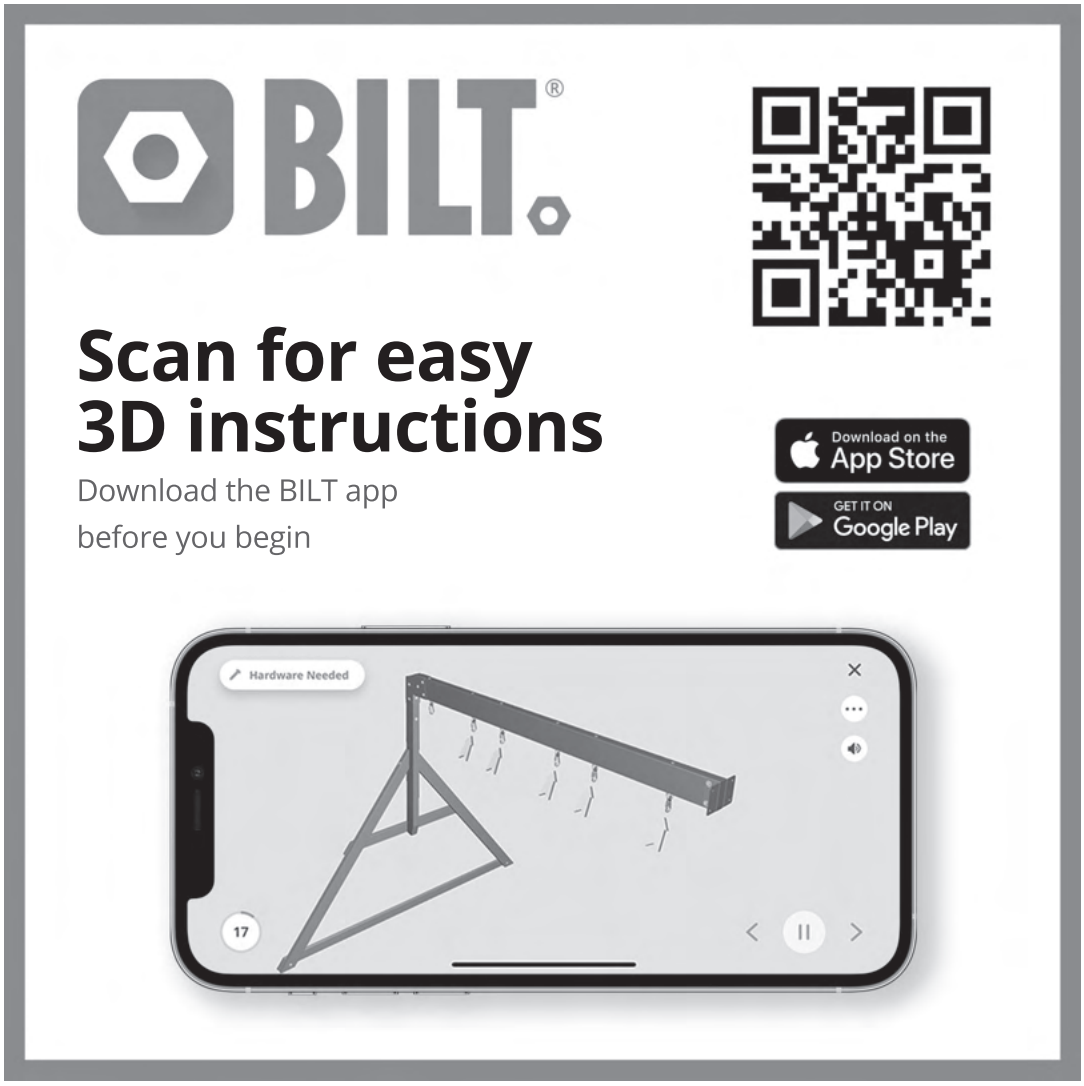

STEP 1A - CABINET FLOOR PANEL ASSEMBLY

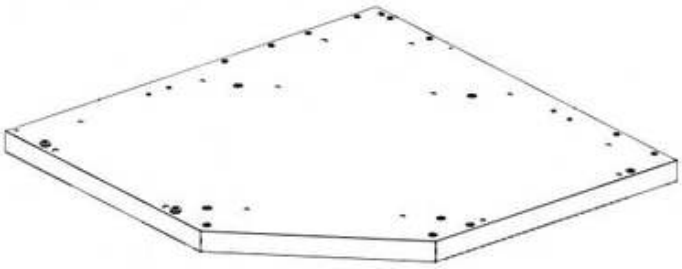

F9 CABINET FLOOR PANEL ASSEMBLY - A4M04702
(x1) 36"x36"x2 5/8" (66x914x914)

- POSITION CABINET FLOOR PANEL IN THE PROXIMITY OF WHERE THE CORNER OF YOUR KITCHEN ISLAND WILL BE.
- EACH FLOOR PANEL HAS FACTORY INSTALLED ADJUSTABLE FEET. USE PROVIDED HEX DRIVER TO ADJUST EACH FOOT UNTIL PANEL IS LEVEL.

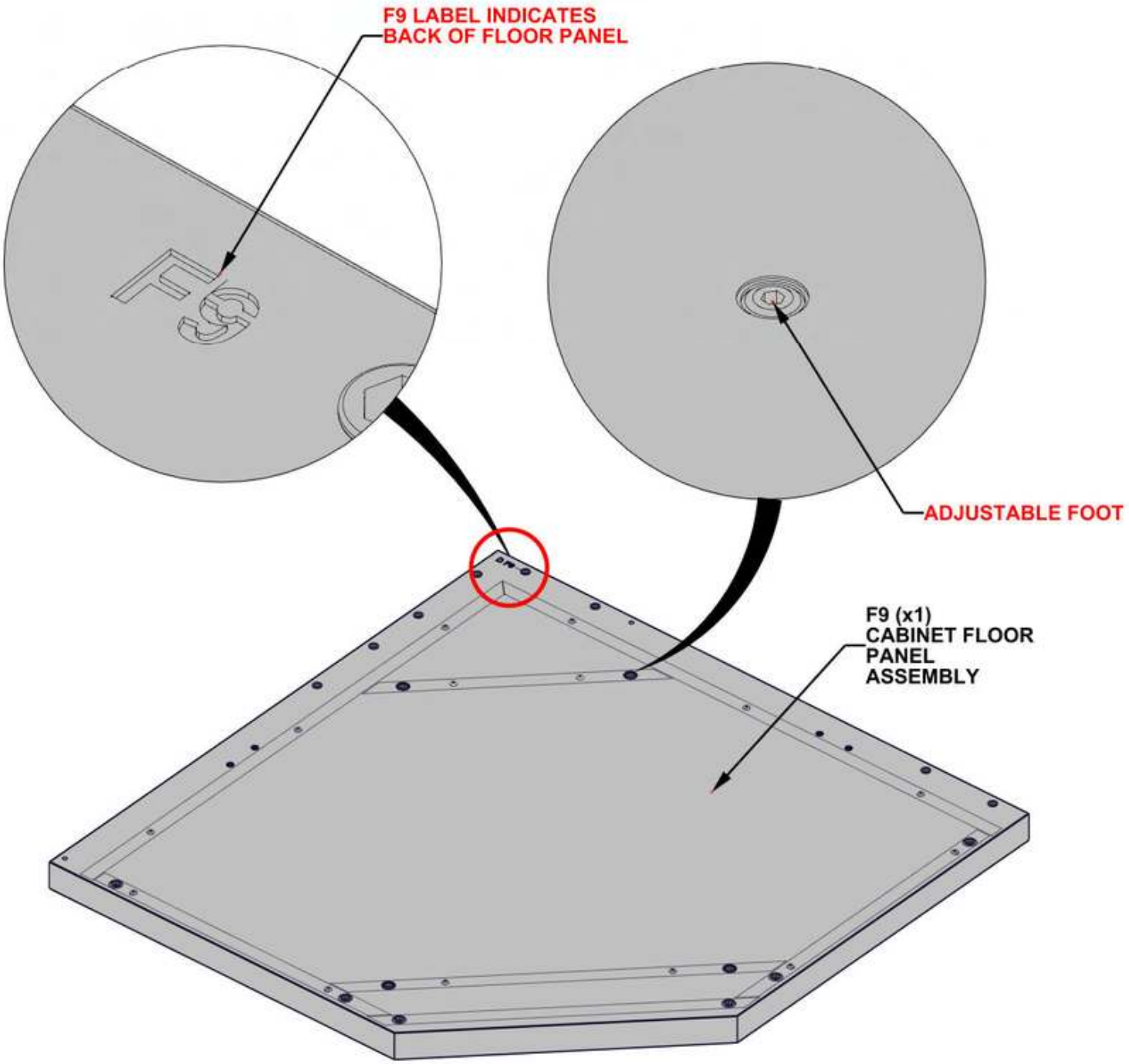

STEP 1B - CABINET FLOOR PANEL ASSEMBLY

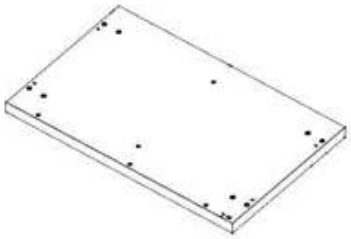

F3 CABINET FLOOR PANEL ASSEMBLY - A4M03560
(x1) 37 3/16"x23 3/8"x2 5/8" (66x594x944)

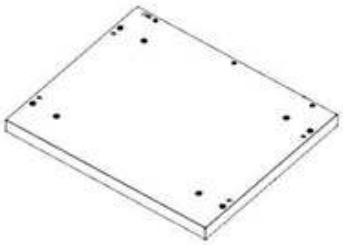

F4 CABINET FLOOR PANEL ASSEMBLY - A4M03595
(x1) 28 1/8"x23 3/8"x2 5/8" (66x594x715)

- POSITION CABINET FLOOR PANELS (F3/F4) AS SHOWN BELOW .
- EACH FLOOR PANEL HAS FACTORY INSTALLED ADJUSTABLE FEET. USE PROVIDED HEX DRIVER TO ADJUST EACH FOOT UNTIL PANEL IS LEVEL.
- FLUSH ALL SIDES OF FLOOR PANELS.

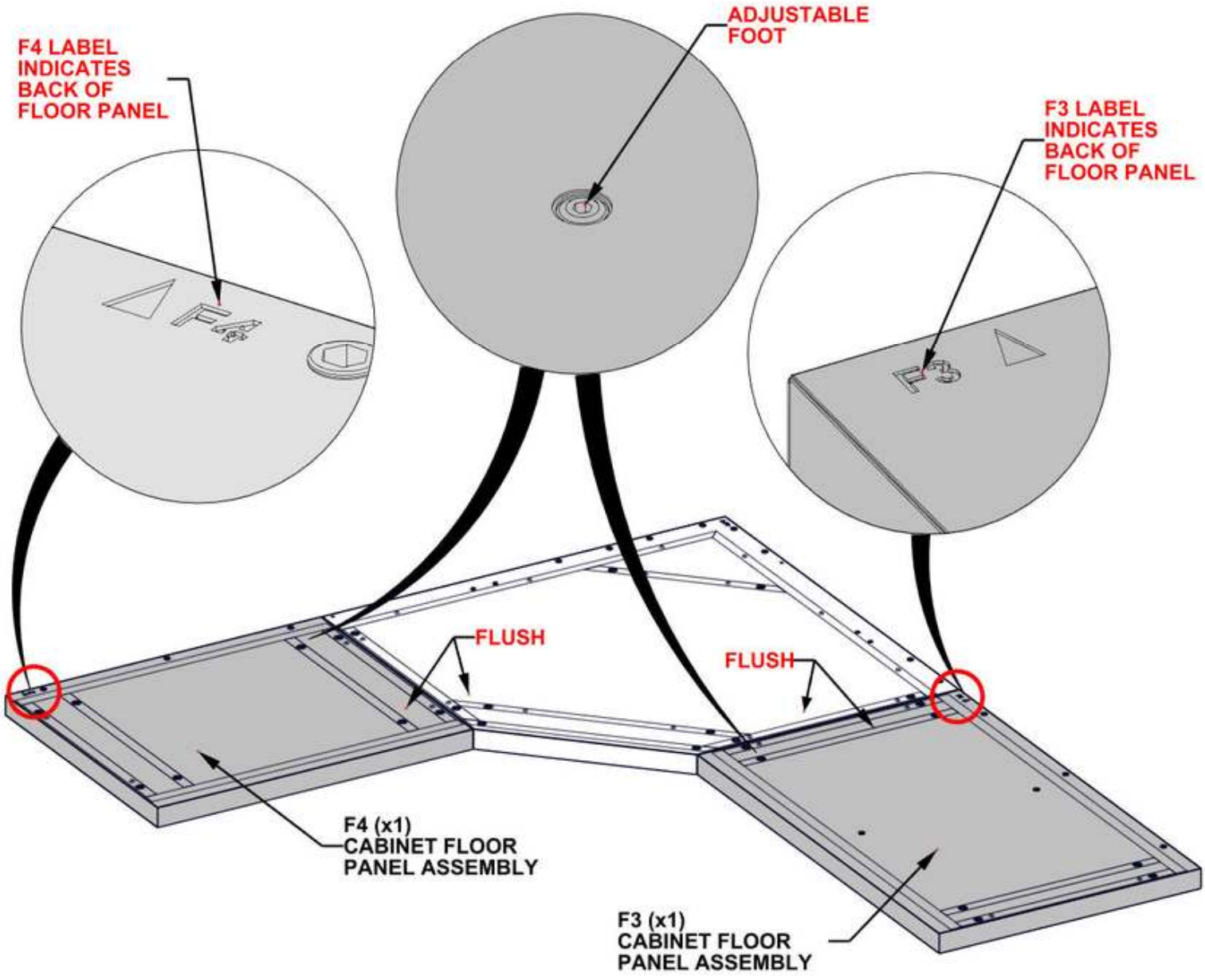

STEP 2 - SINK CABINET ASSEMBLY

Qty	PartNo	Description
2	H101202	TORX PAN HEAD 1/4-20x3/4 ASSY



S29 CABINET SIDE PANEL ASSEMBLY - A4M04833
(x1) 33 3/8"x23 3/8"x1 3/8" (35.00x594x848.20)

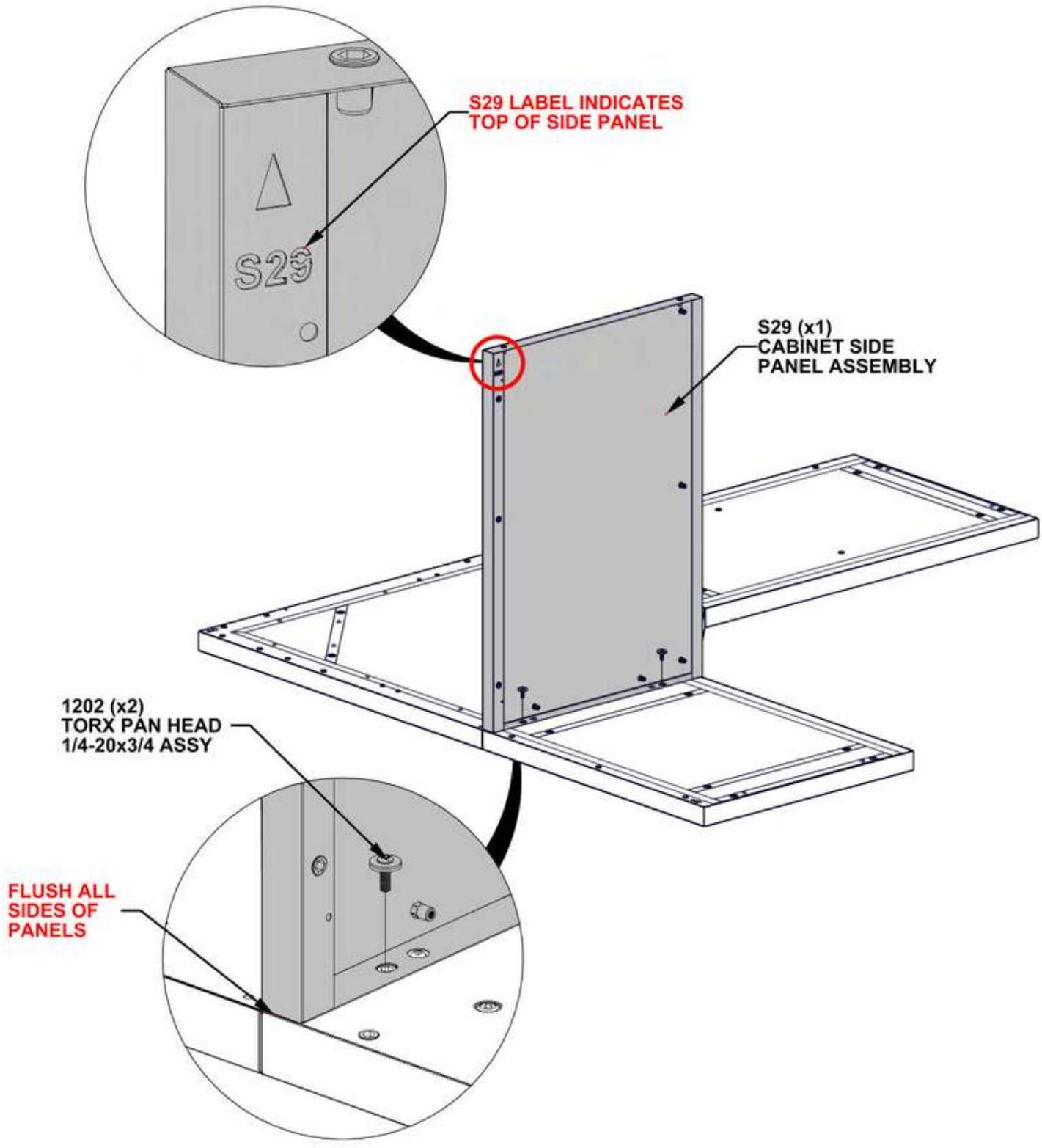

STEP 3 - SINK CABINET ASSEMBLY

Qty	PartNo	Description
4	H101202	TORX PAN HEAD 1/4-20x3/4 ASSY

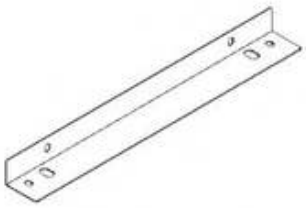

A6 ANGLED BRACKET - A4M03053
(x1) 1 3/8"x1 15/16"x17 1/8" (35x50x435)

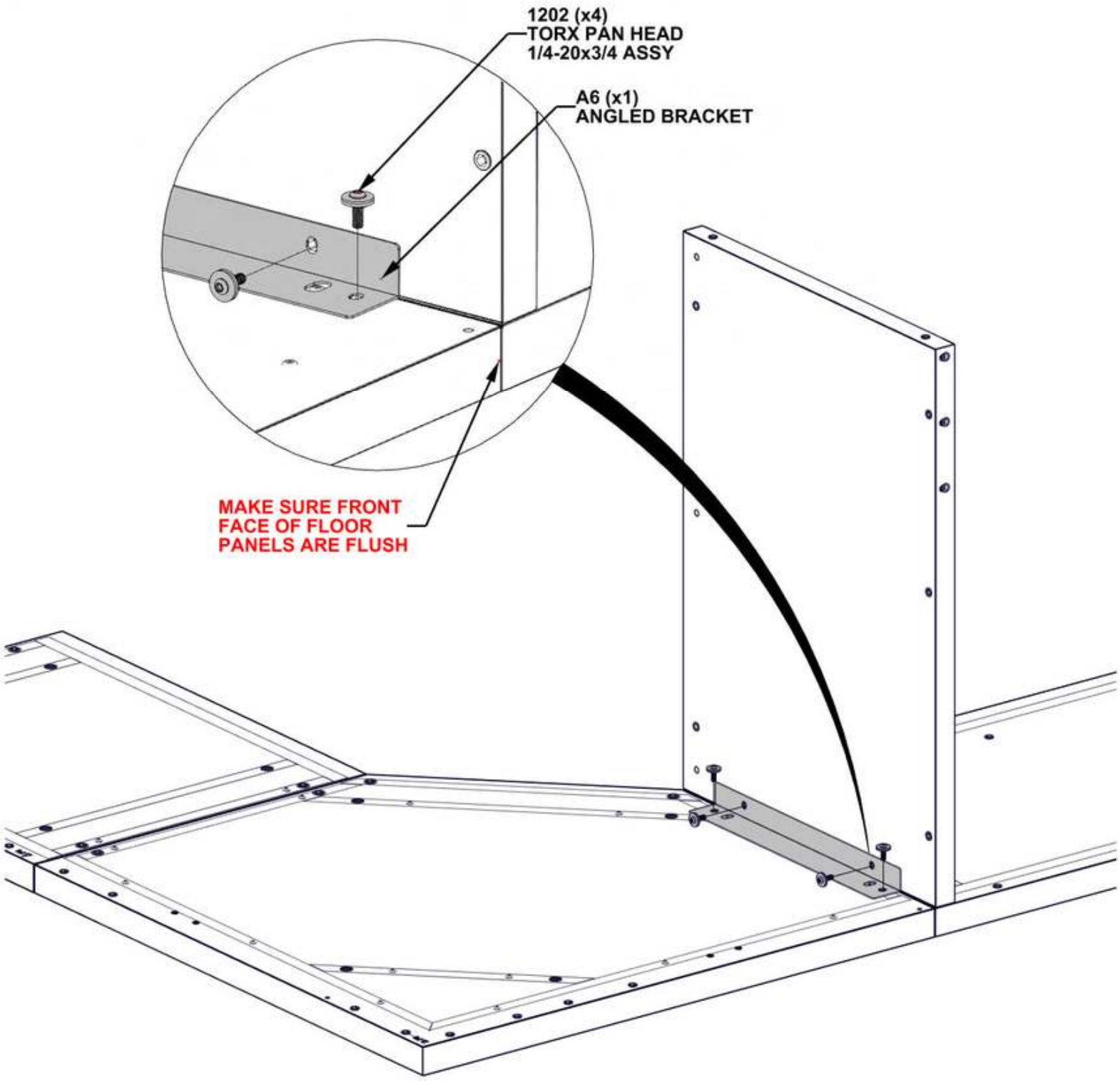

STEP 4 - SINK CABINET ASSEMBLY

Qty	PartNo	Description
2	H101202	TORX PAN HEAD 1/4-20x3/4 ASSY



S32 CABINET SIDE PANEL ASSEMBLY - A4M04837
(x1) 33 3/8"x23 3/8"x1 3/8" (35.00x594.00x848.20)

- POSITION CABINET SIDE PANEL AS SHOWN BELOW.
- FLUSH CABINET SIDE PANEL WITH CABINET FLOOR PANEL.

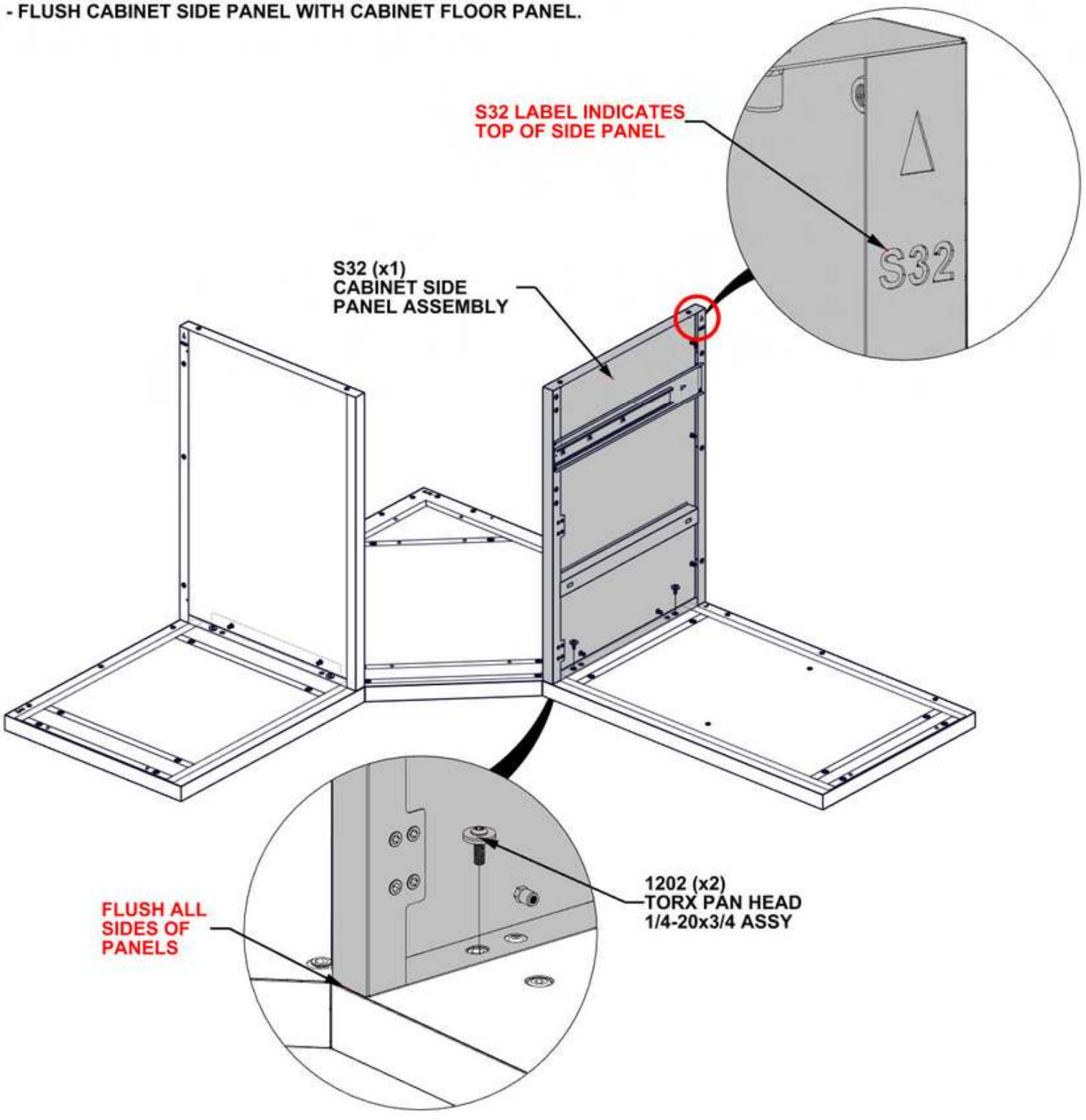

STEP 5 - SINK CABINET ASSEMBLY

Qty	PartNo	Description
4	H101202	TORX PAN HEAD 1/4-20x3/4 ASSY

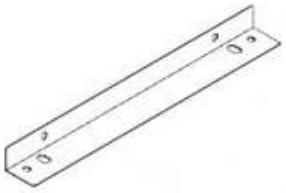

A6 ANGLED BRACKET - A4M03053
(x1) 1 3/8"x1 15/16"x17 1/8" (35x50x435)

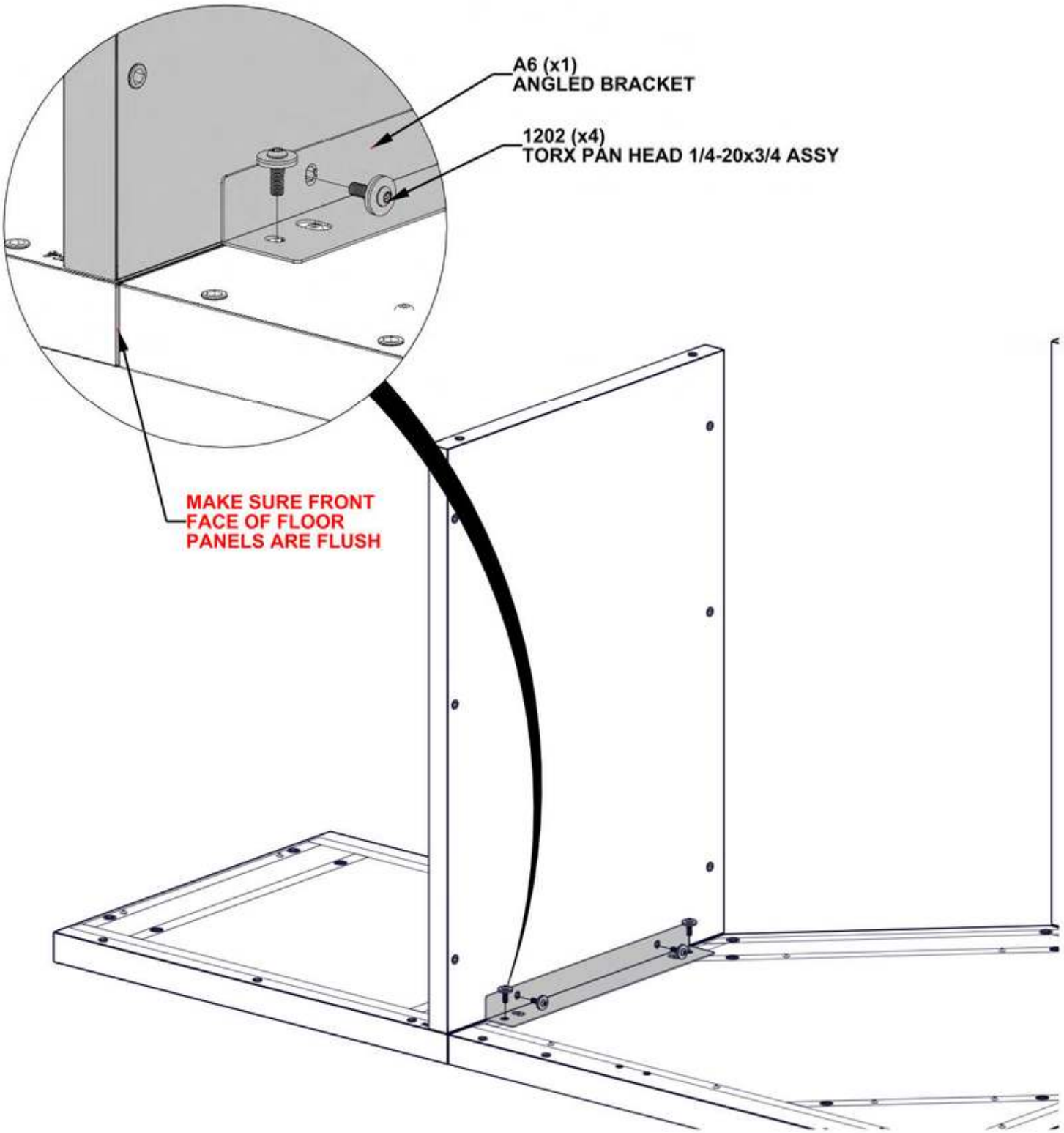

STEP 6 - SINK CABINET ASSEMBLY

Qty	PartNo	Description
4	H101202	TORX PAN HEAD 1/4-20x3/4 ASSY

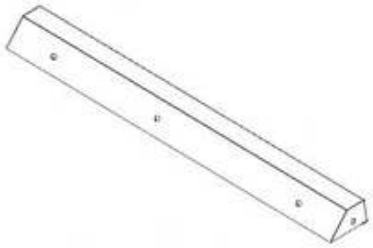

H15 CABINET FRONT DOOR HINGE BRACKET ASSEMBLY - A4M04718
(x1) 33 3/8"x3 1/4"x1 3/4" (45x83x848)

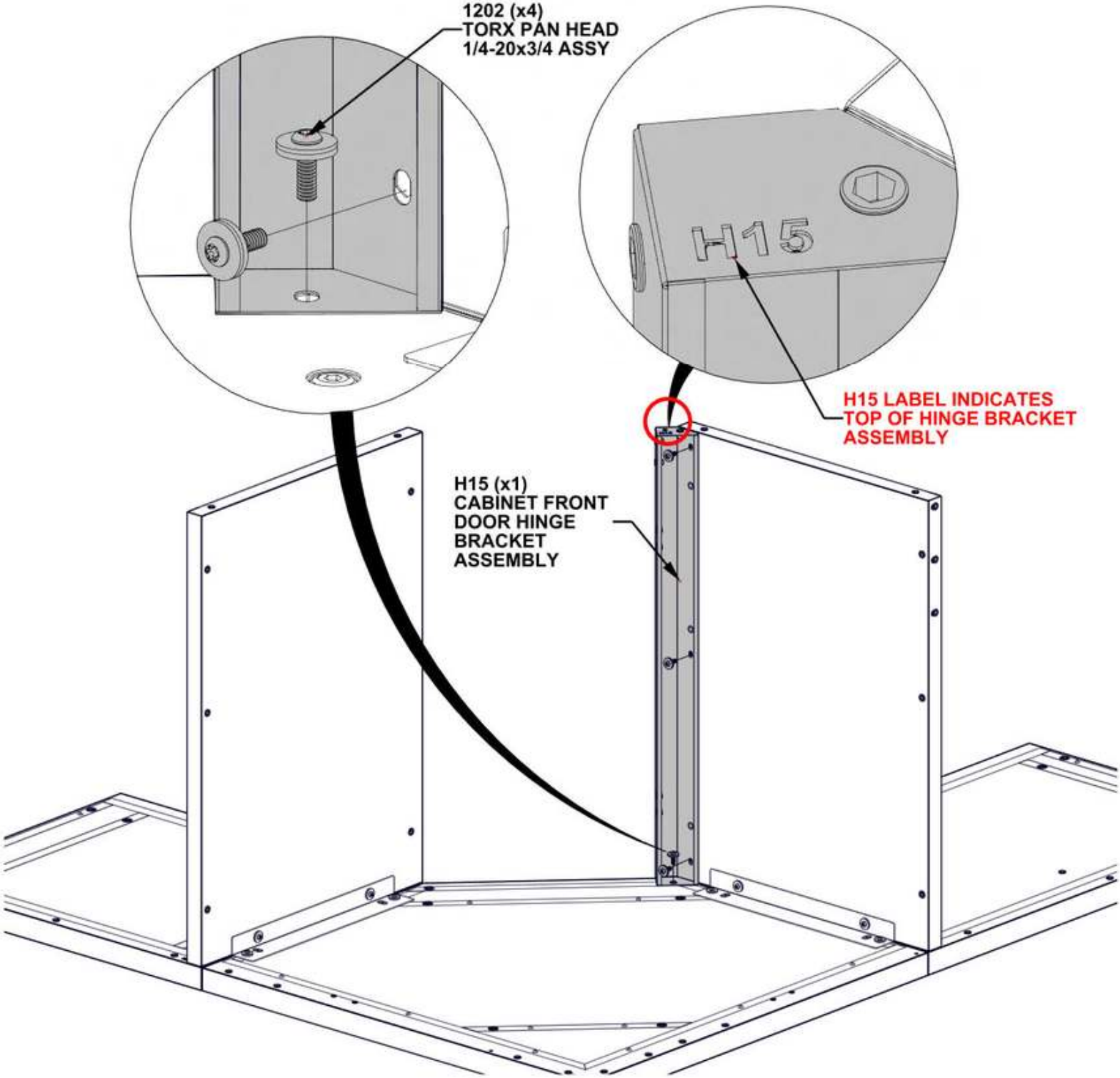

STEP 7 - SINK CABINET ASSEMBLY

Qty	PartNo	Description
4	H101202	TORX PAN HEAD 1/4-20x3/4 ASSY

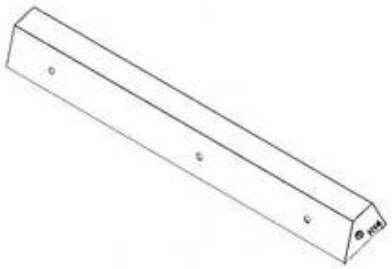

H14 CABINET FRONT DOOR BRACKET ASSEMBLY - A4M04717
(x1) 33 3/8"x3 1/4"x1 3/4" (45x83x848)

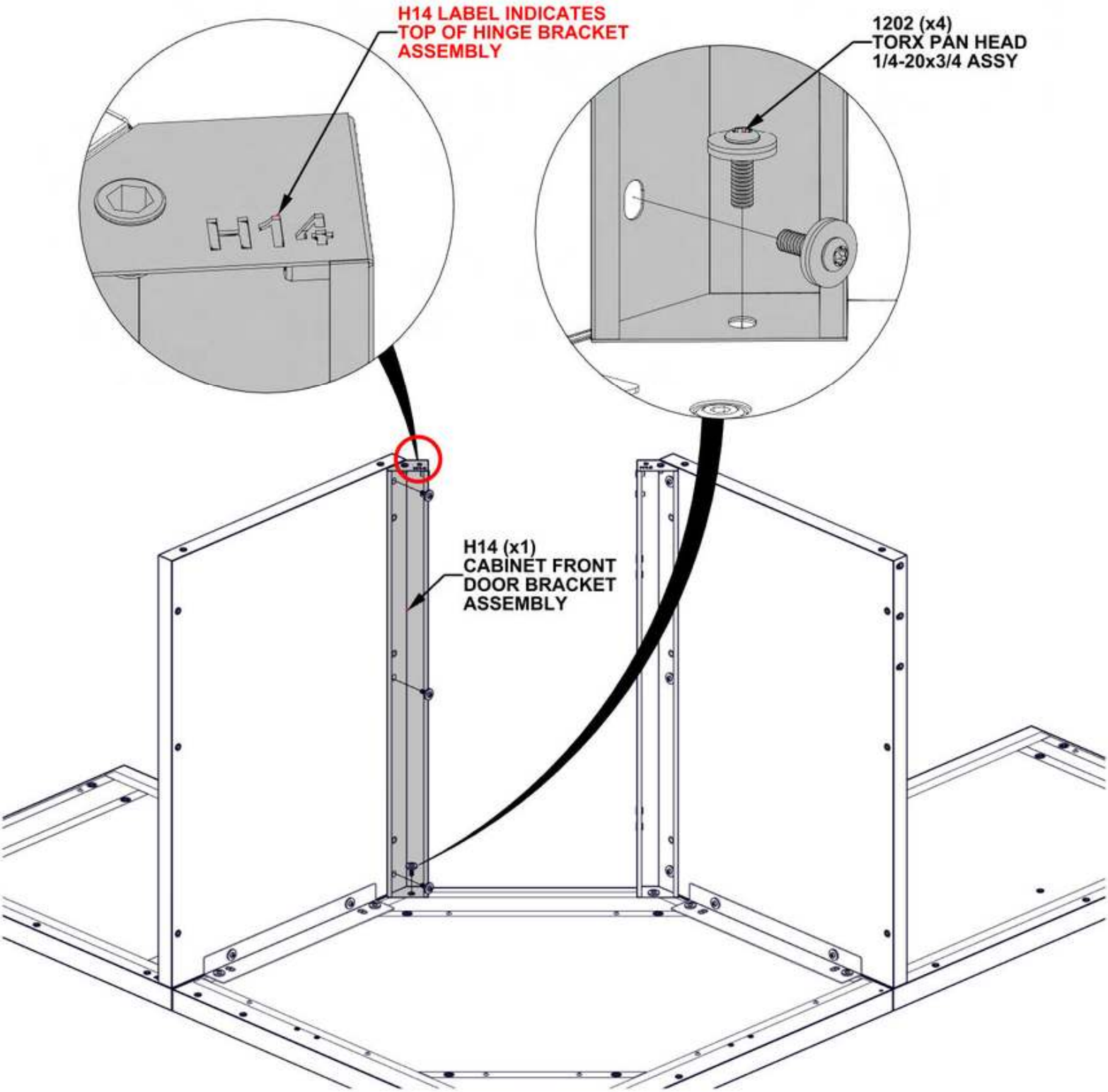

STEP 8 - SINK CABINET ASSEMBLY

Qty	PartNo	Description
2	H101289	PAN HEAD SCREW 8-32x1/2" SS

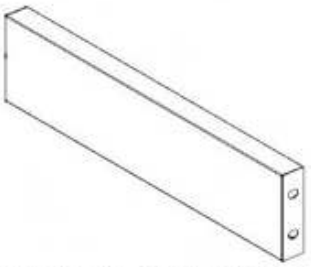

H16 CABINET HORIZONTAL BEAM ASSEMBLY - A4M04719
(x1) 14 5/8"x3 3/8"x1" (25x85x372)



A2 MAGNET BRACKET - A4M03026
(x1) 1"x1 1/4"x3 1/8" (25x31x80)

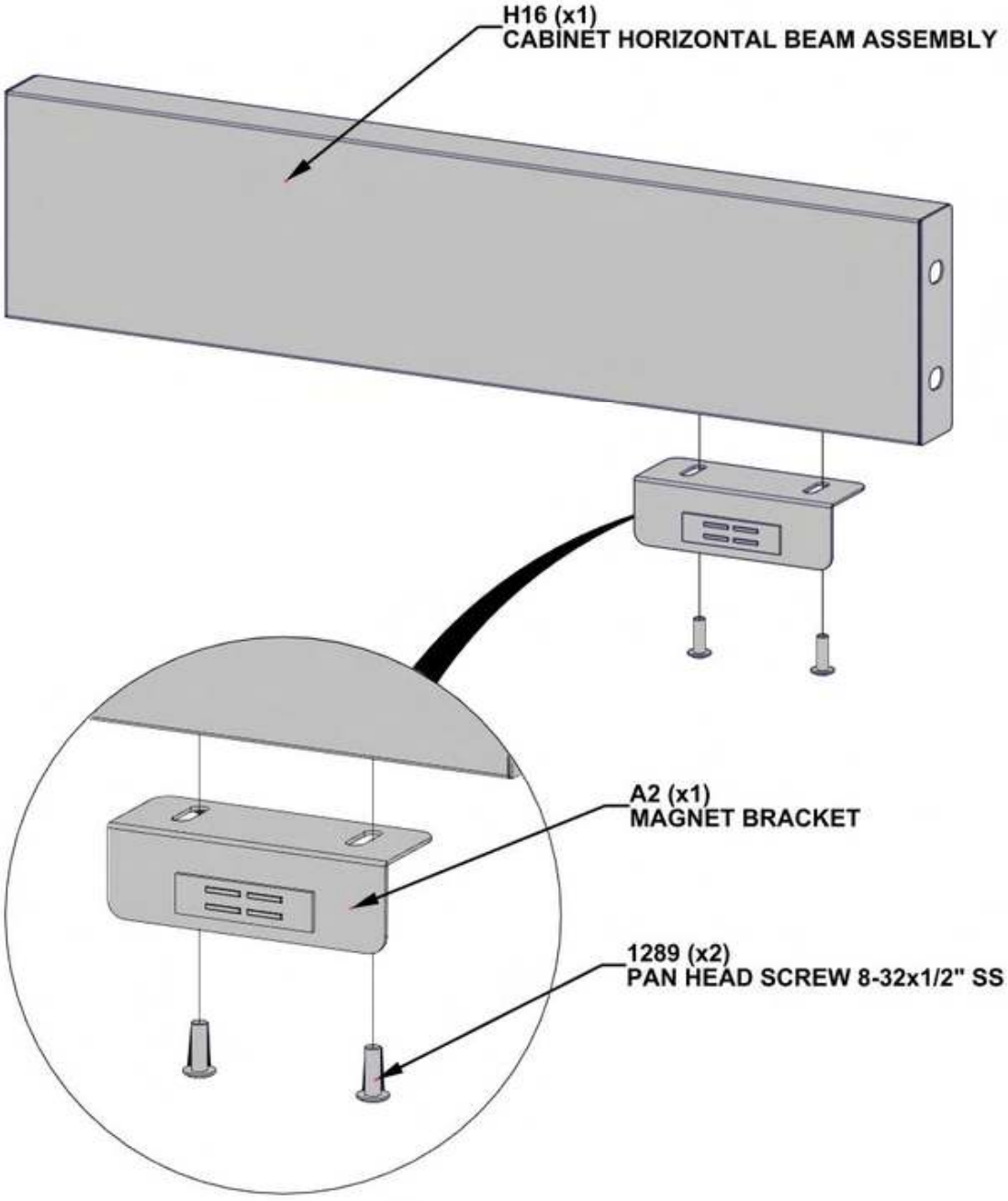

STEP 9 - SINK CABINET ASSEMBLY

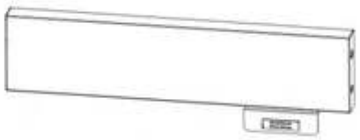

SINK CABINET ASSEMBLY FROM STEP 8

Qty	PartNo	Description
4	H101202	TORX PAN HEAD 1/4-20x3/4 ASSY

- HARDWARE ATTACHED ON INSIDE OF CABINET

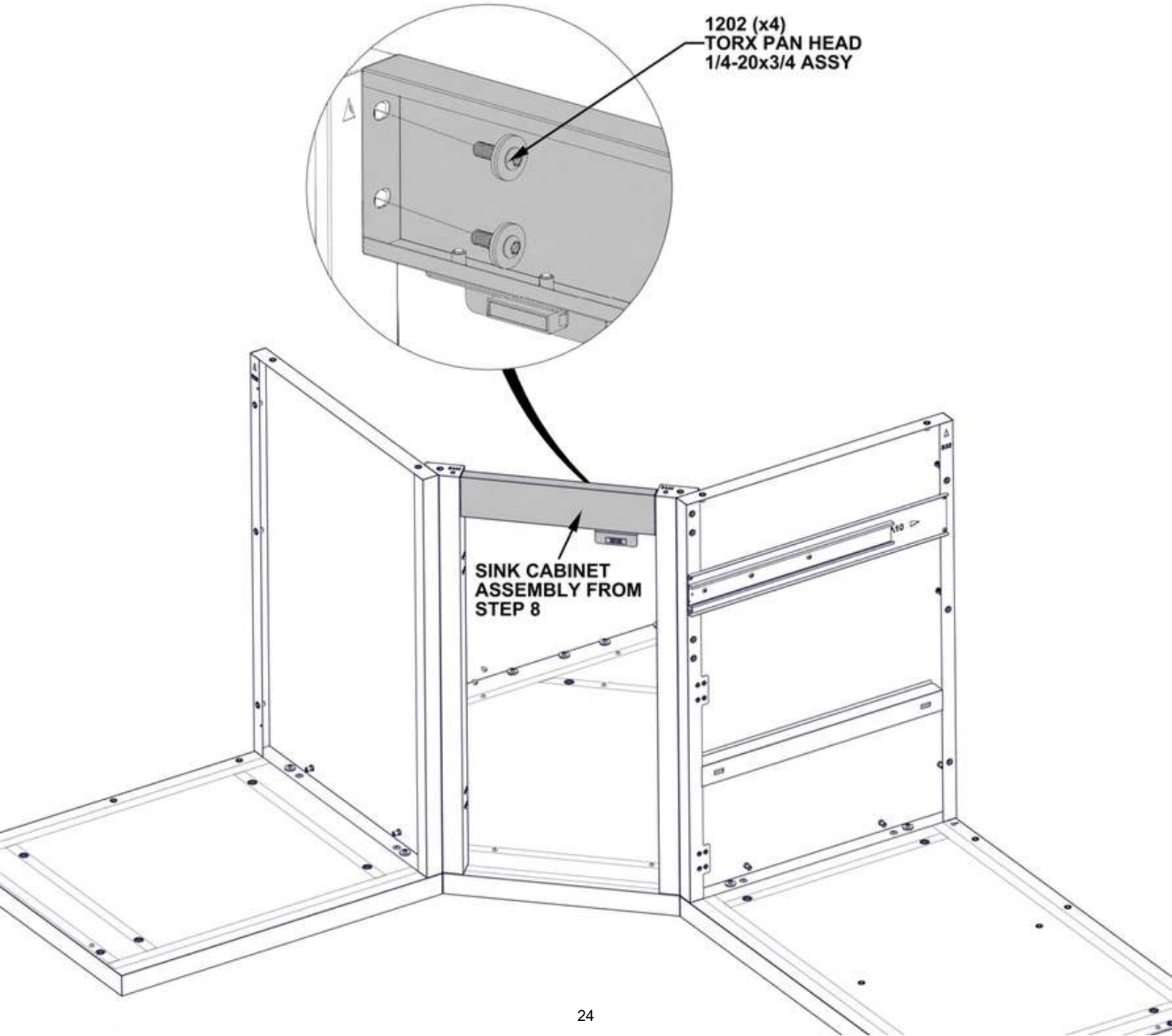

STEP 10 - SINK CABINET ASSEMBLY

Qty	PartNo	Description
5	H101202	TORX PAN HEAD 1/4-20x3/4 ASSY



G14 SINK CABINET SIDE PANEL ASSEMBLY - A4M04716
(x1) 27 5/16"x33 3/8"x1 3/16" (30x847.2x693)

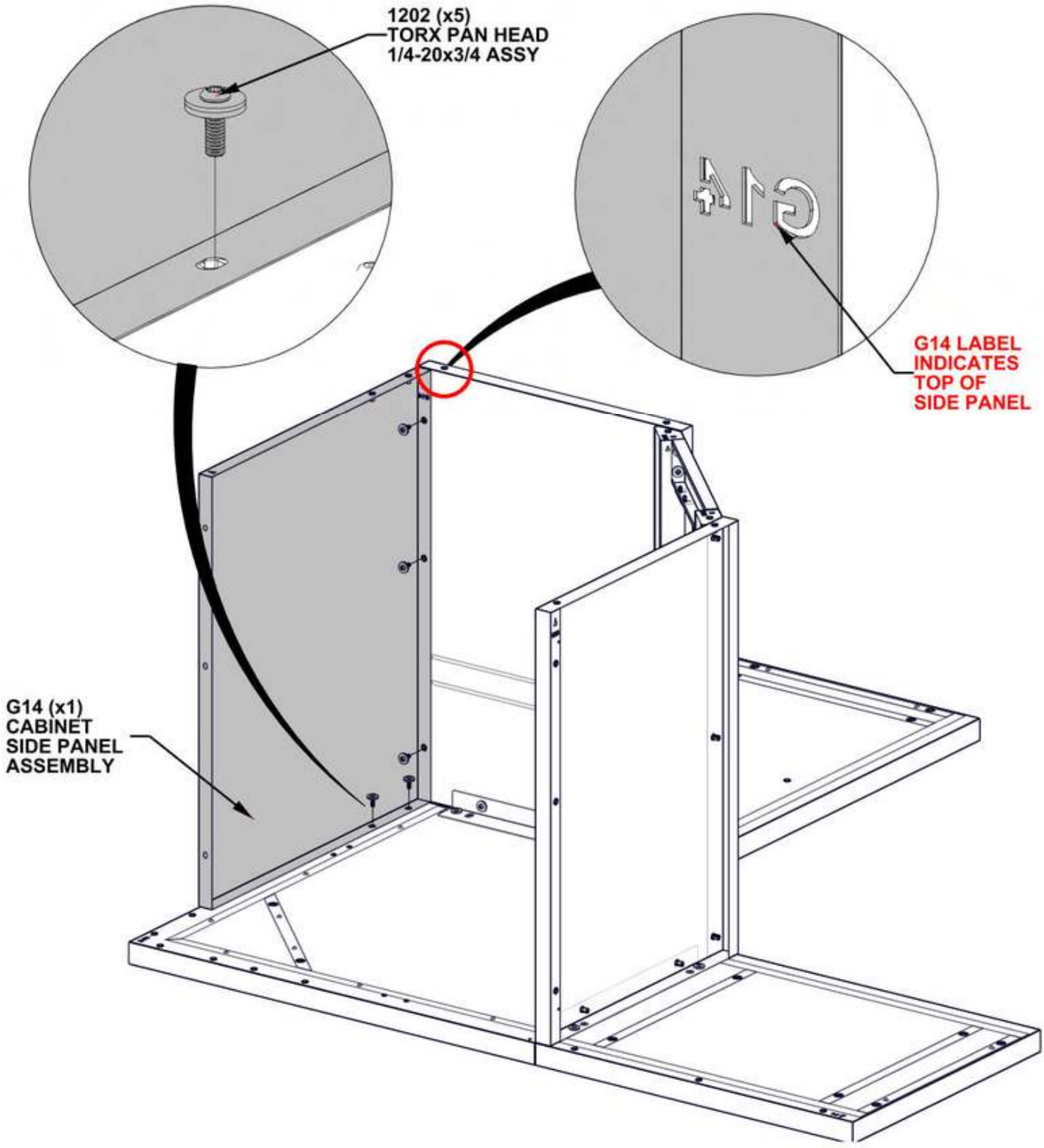

STEP 11 - SINK CABINET ASSEMBLY



Qty	PartNo	Description
7	H101202	TORX PAN HEAD 1/4-20x3/4 ASSY

S30 CABINET CORNER PANEL ASSEMBLY - A4M04847
(x1) 33 3/8"x8 11/16"x8 11/16" (220.00x220.00x848.00)

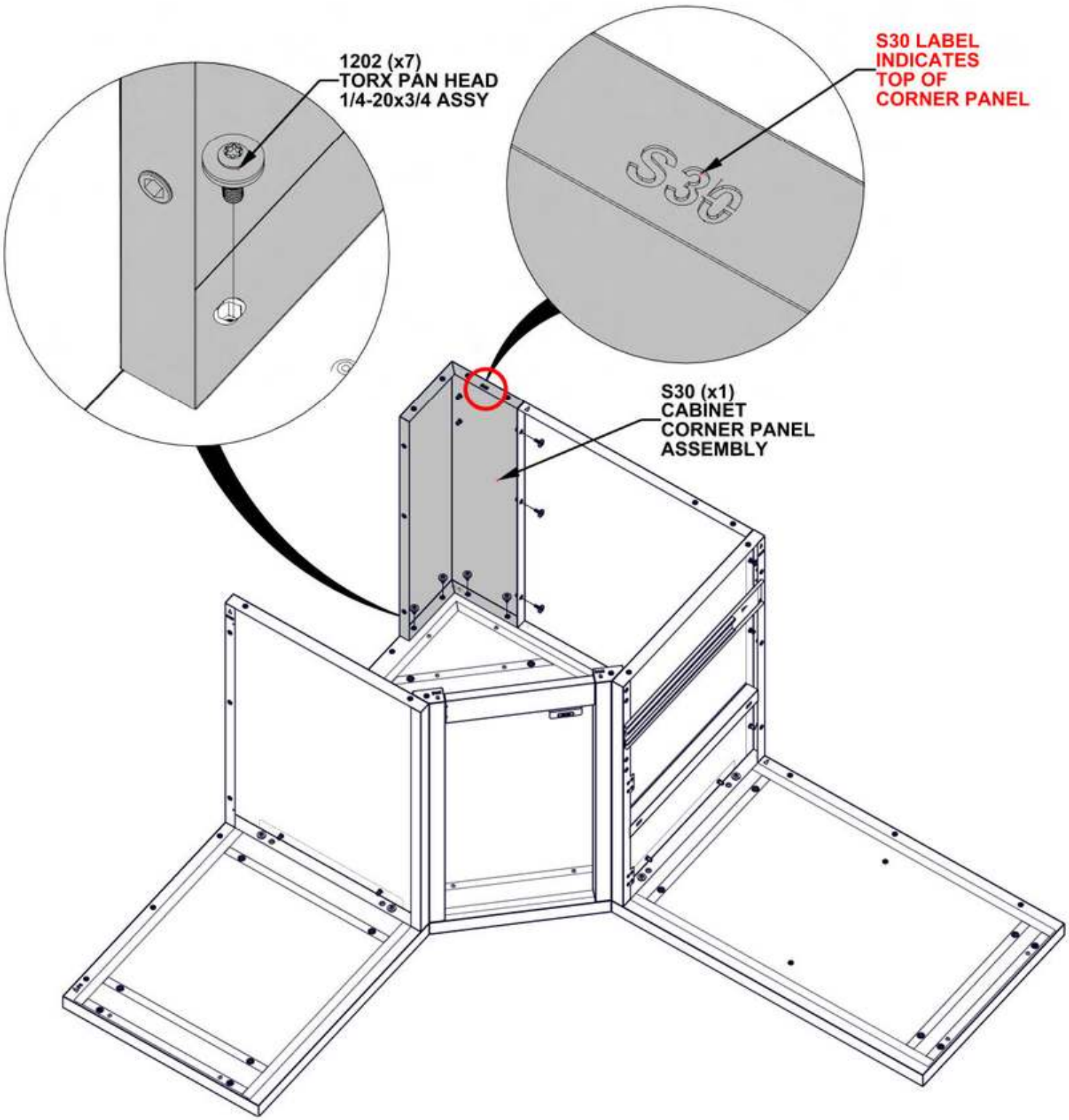

STEP 12 - SINK CABINET ASSEMBLY



Qty	PartNo	Description
4	H101289	PAN HEAD SCREW 8-32x1/2" SS

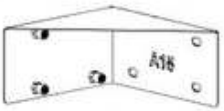

G13 CABINET BACK PANEL ASSEMBLY - A4M04715
(x1) 33 3/8"x8 1/2"x1 3/16" (30x215x848)

A15 DOOR STOPPER BRACKET ASSEMBLY - A4M04480
(x1) 3 15/16"x3 3/4"1 15/16" (50x95x100)

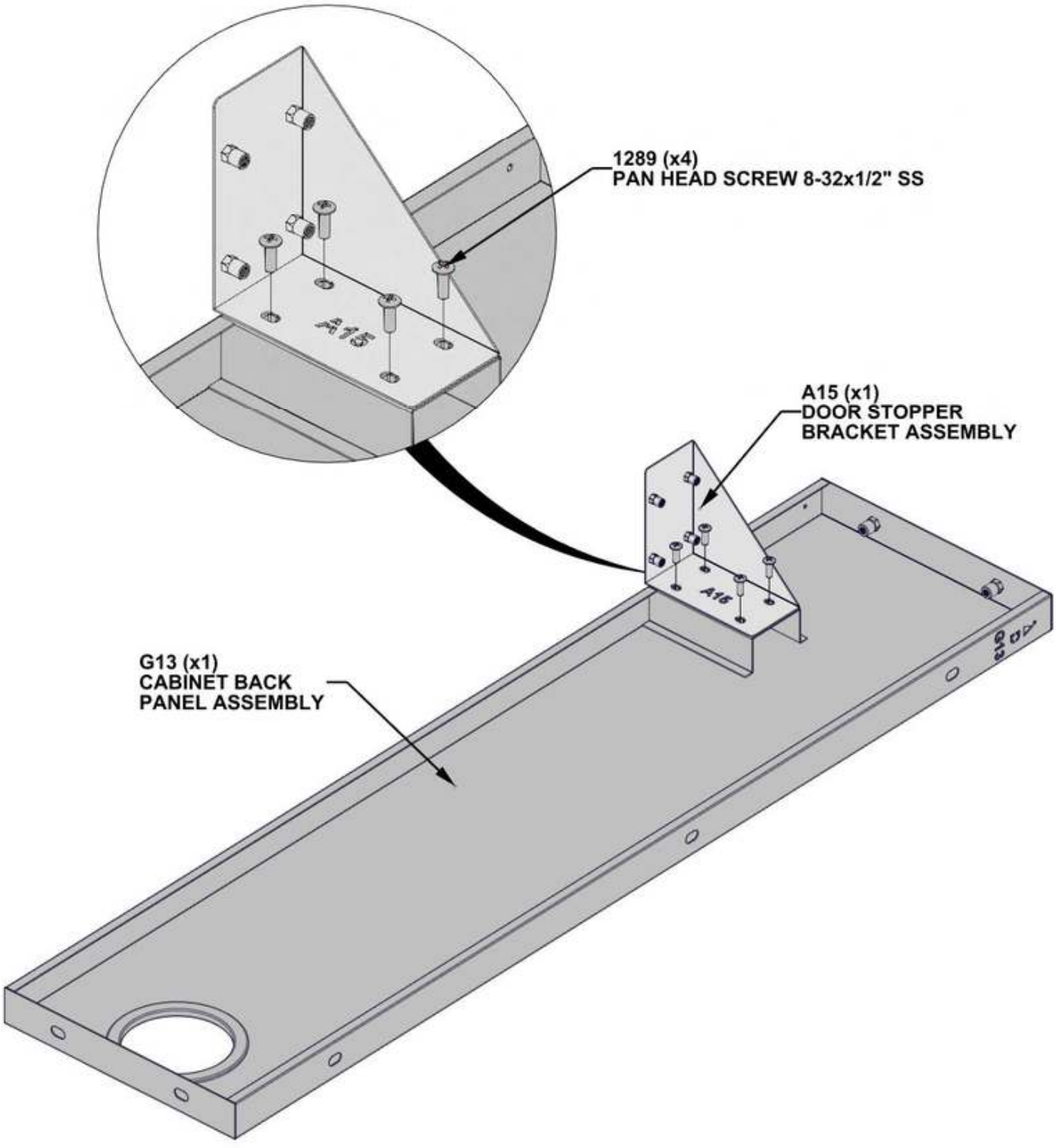

STEP 13 - SINK CABINET ASSEMBLY

Qty	PartNo	Description
5	H101202	TORX PAN HEAD 1/4-20x3/4 ASSY



SINK CABINET ASSEMBLY FROM STEP 12

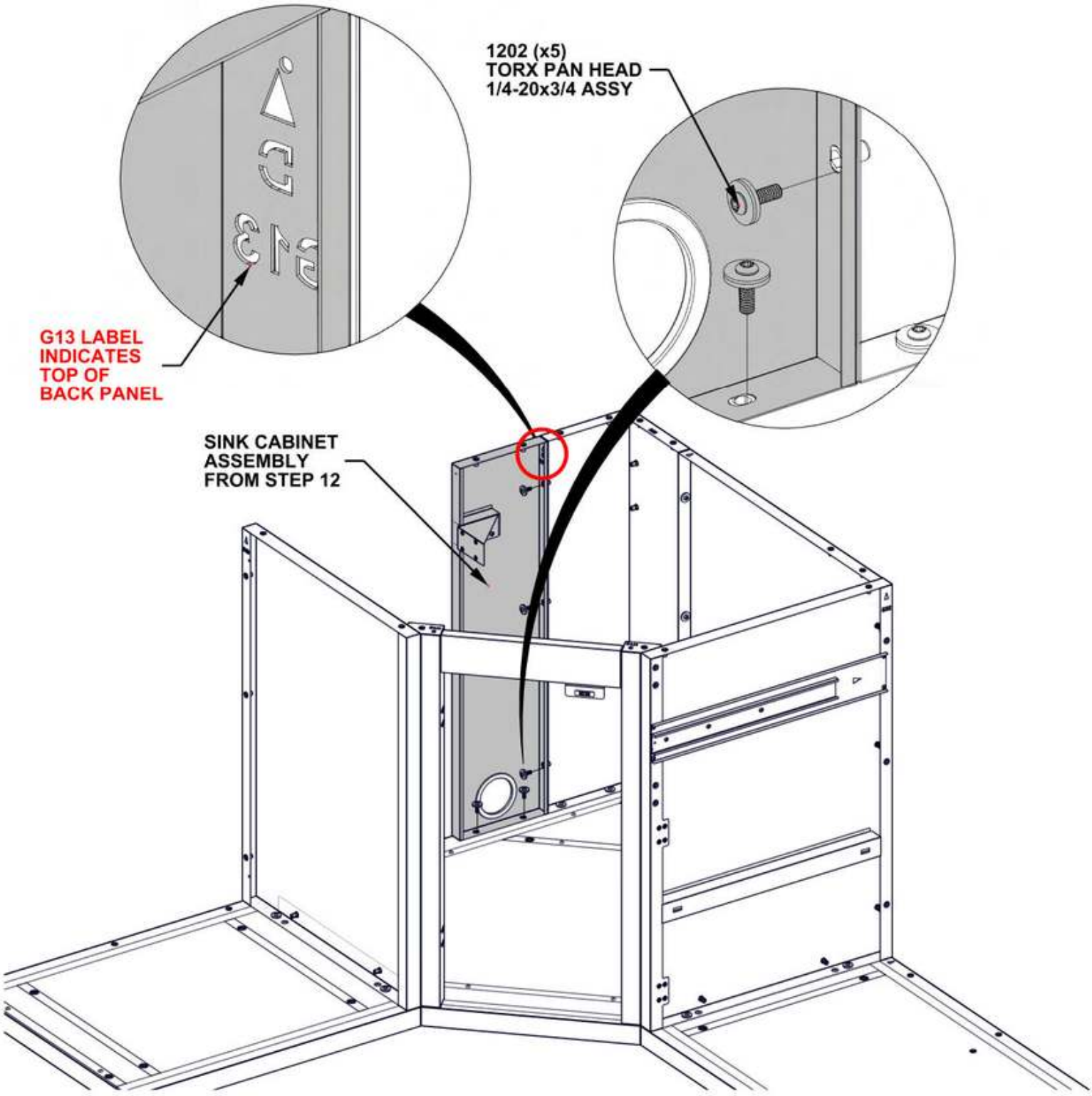

STEP 14 - SINK CABINET ASSEMBLY

Qty	PartNo	Description
4	H101289	PAN HEAD SCREW 8-32x1/2" SS

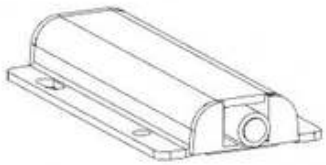

A12 DOOR STOPPER - A4M04128
(x1) 3 11/16"x1 3/4"x1/2" (13.3x45x94)

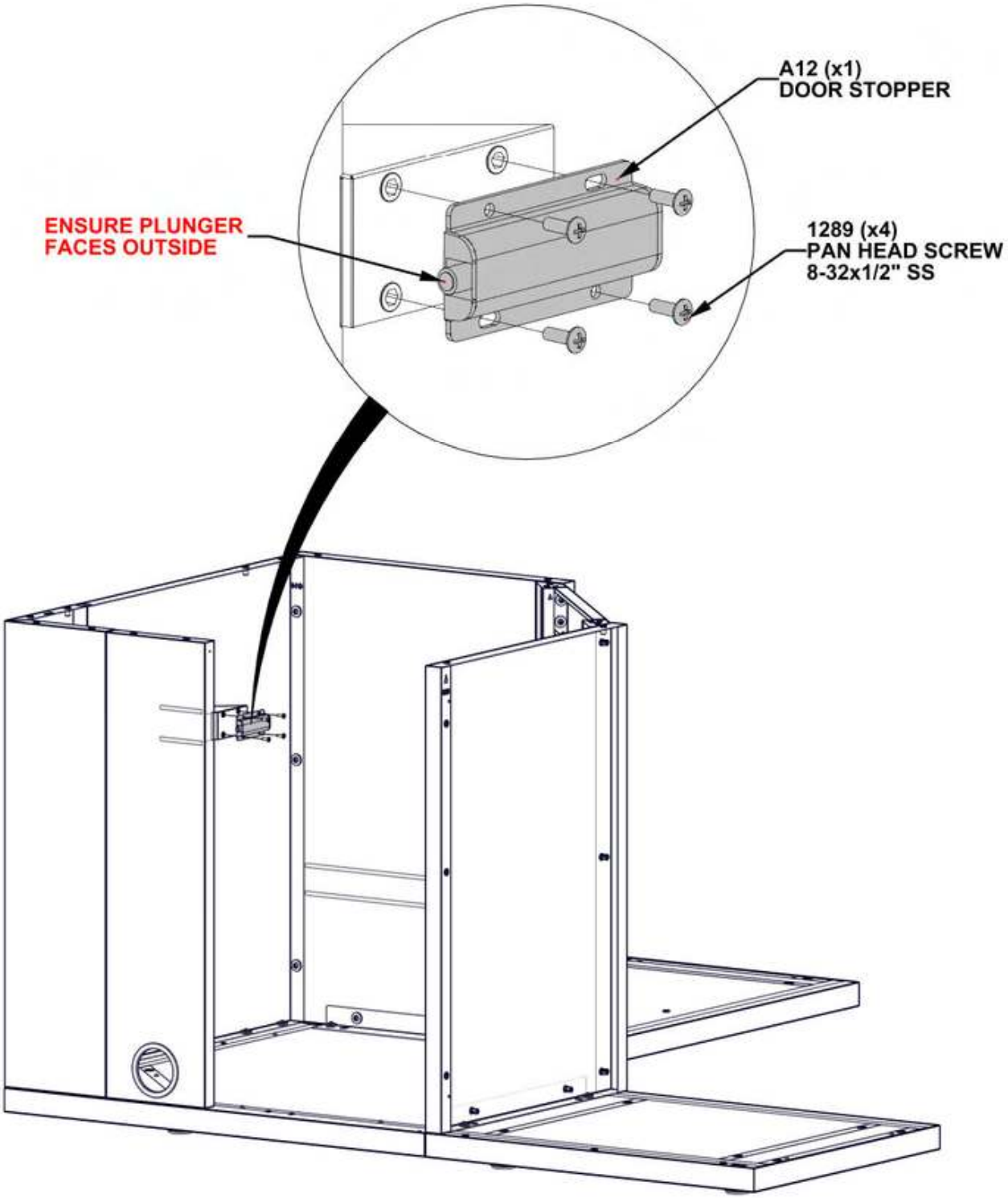

STEP 15 - SINK CABINET ASSEMBLY

Qty	PartNo	Description
2	H101289	PAN HEAD SCREW 8-32x1/2" SS



A2 MAGNET BRACKET - A4M03026
(x1) 1"x1 1/4"x3 1/8" (25x31x80)

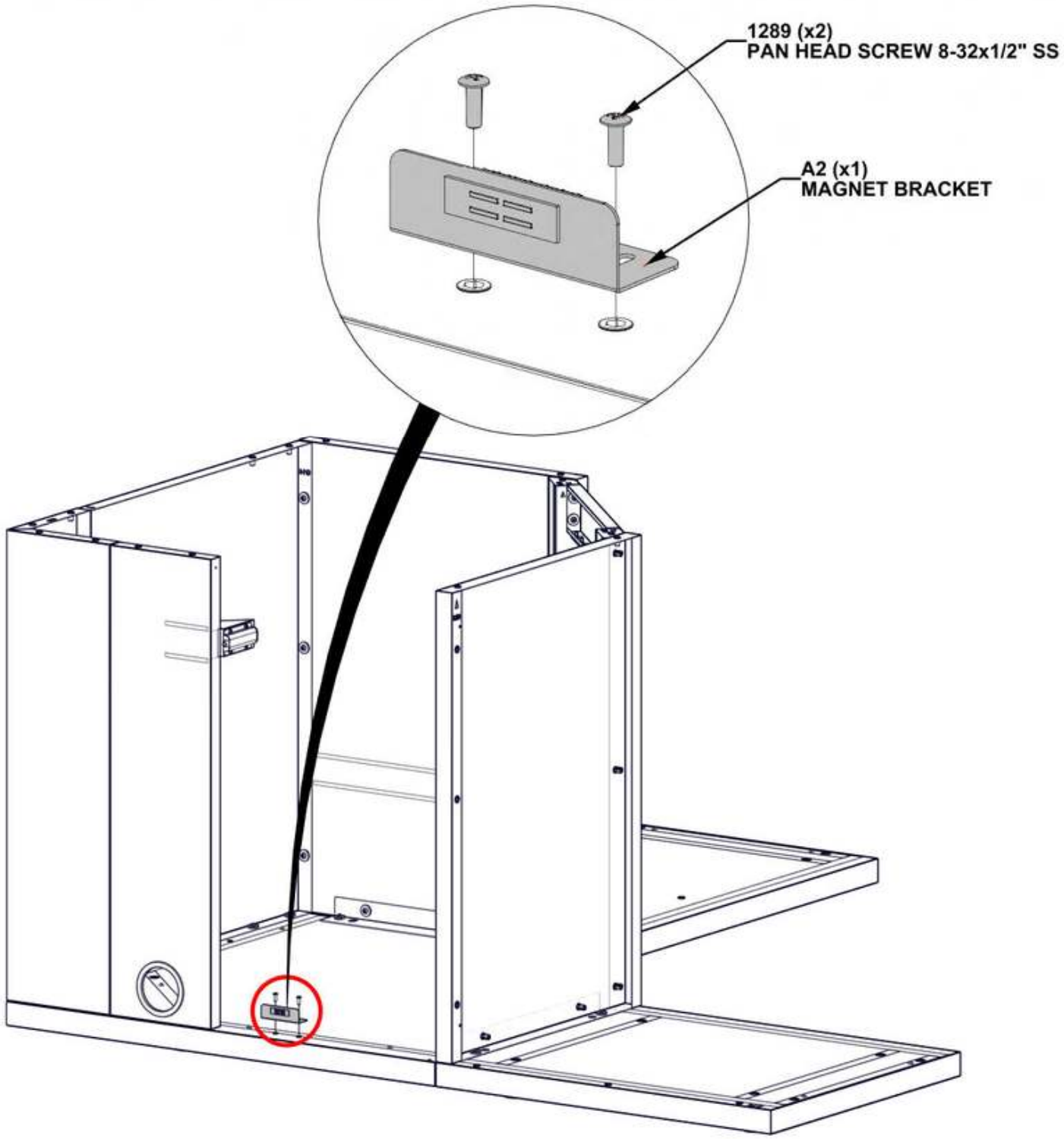

STEP 16 - SINK CABINET ASSEMBLY

Qty	PartNo	Description
10	H101103	TORX SOCKET SCREW 1/4-20

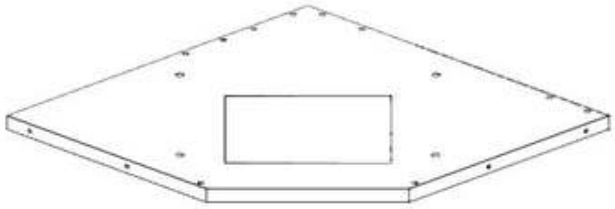

T15 SINK CABINET TABLETOP FRAME - A4M04713
(x1) 36"x914.00x1 1/4" (32x914x914)

- FLUSH BACK AND SIDES OF PANEL ASSEMBLY.
- SQUARE ALL SIDES OF CABINET BEFORE TIGHTENING HARDWARE.

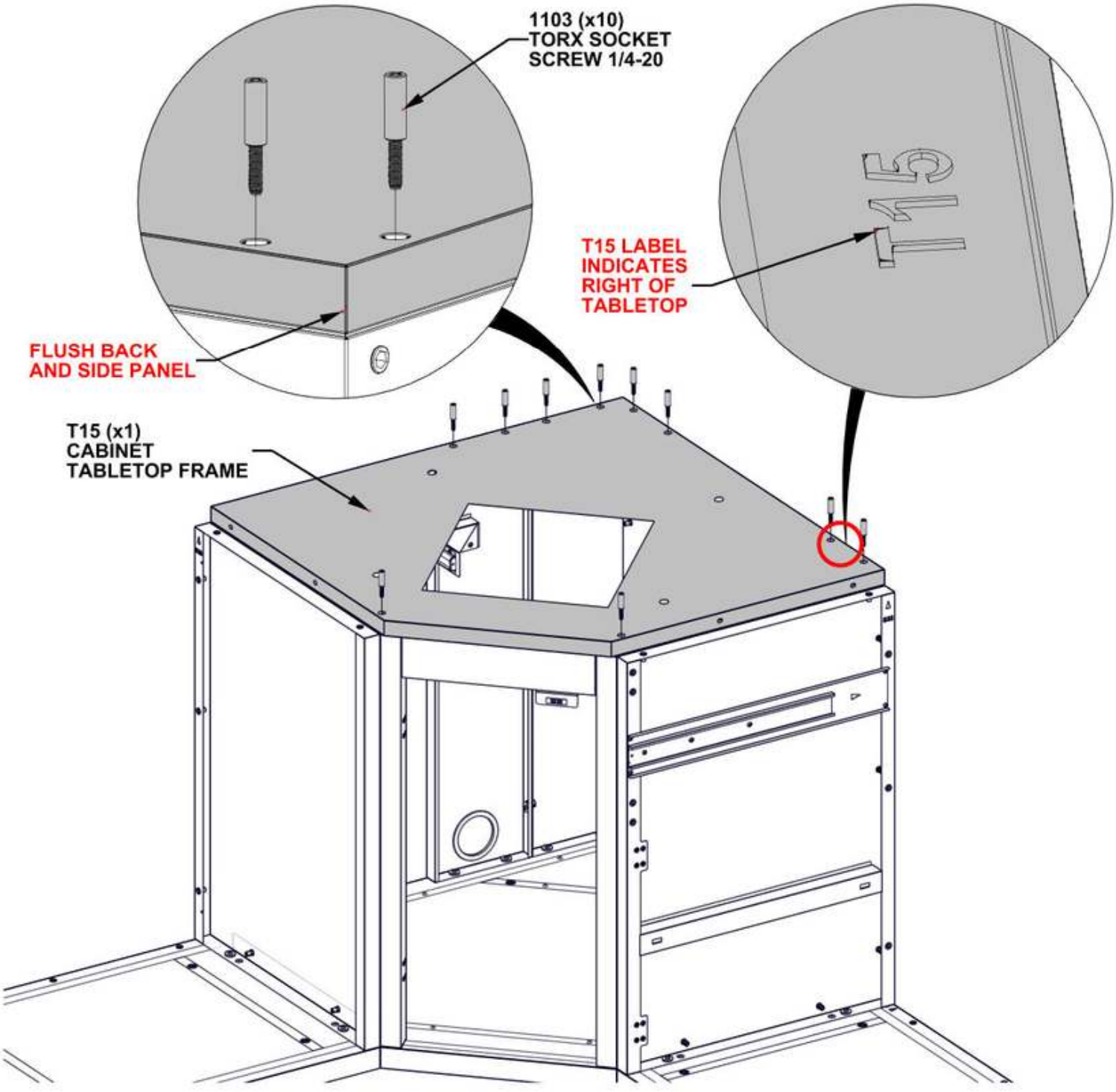

STEP 17 - FRIDGE CABINET ASSEMBLY

Qty	PartNo	Description
2	H101202	TORX PAN HEAD 1/4-20x3/4 ASSY



S28 CABINET SIDE PANEL ASSEMBLY - A4M04832
(x1) 33 7/16"x23 3/8"x2 1/16" (53x594x849.7)

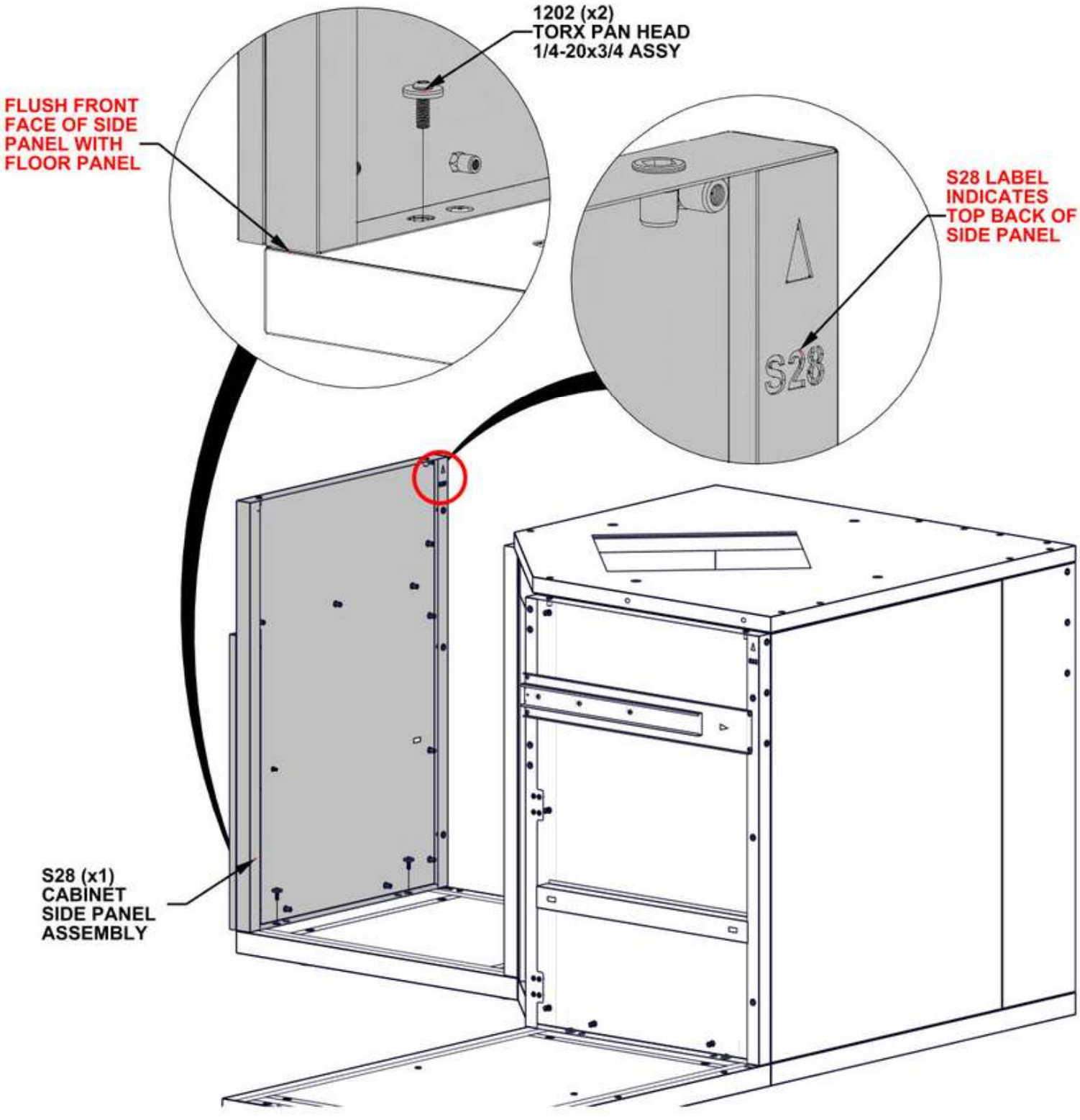

STEP 18 - FRIDGE CABINET ASSEMBLY

Qty	PartNo	Description
9	H101202	TORX PAN HEAD 1/4-20x3/4 ASSY

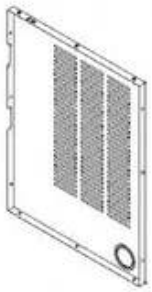

G4 CABINET BACK PANEL ASSEMBLY - A4M03599
(x1) 25 5/16"x33 3/8"x1 3/16" (30x847.2x643)

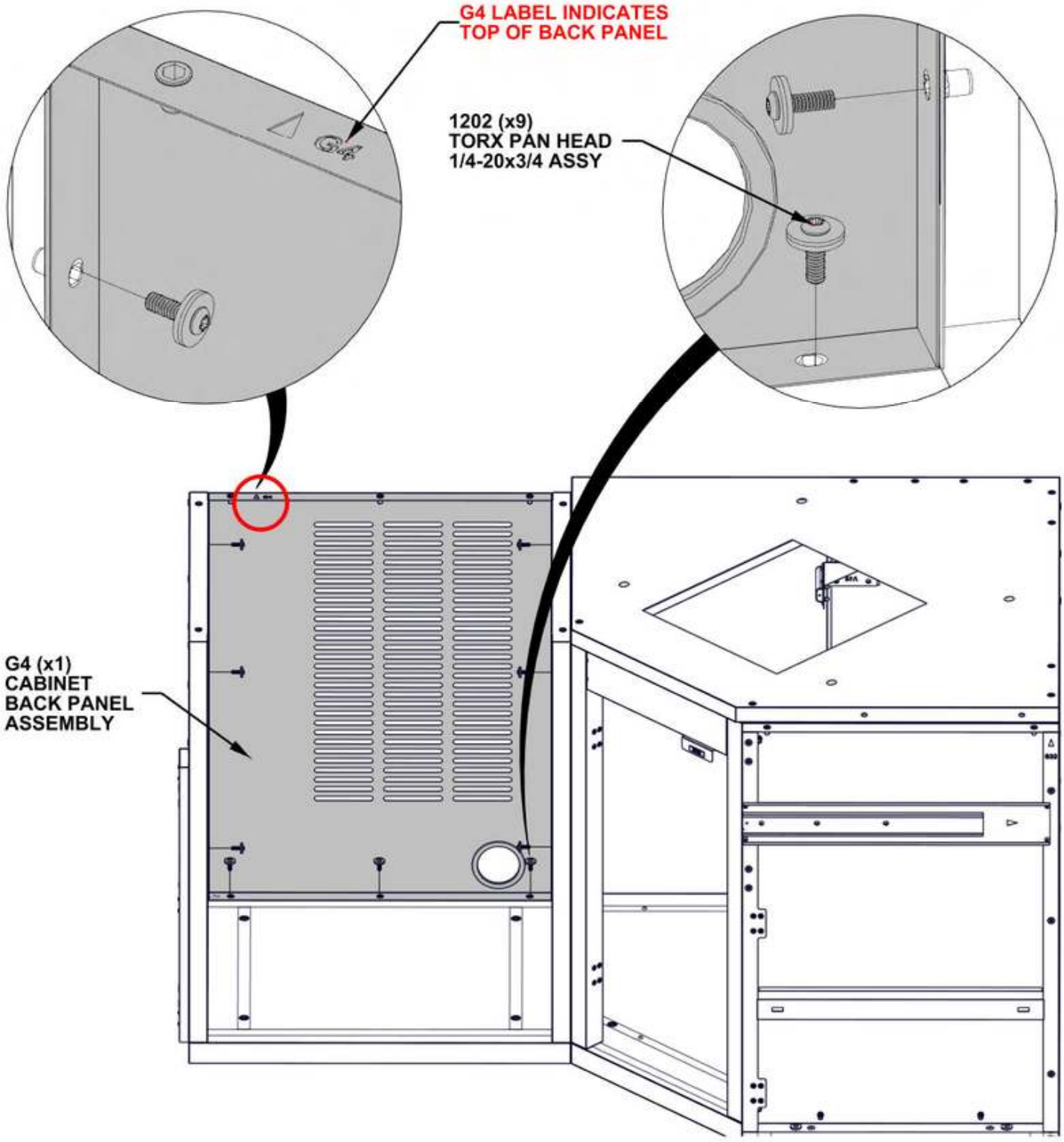

STEP 19 - FRIDGE CABINET ASSEMBLY

Qty	PartNo	Description
7	H101103	TORX SOCKET SCREW 1/4-20

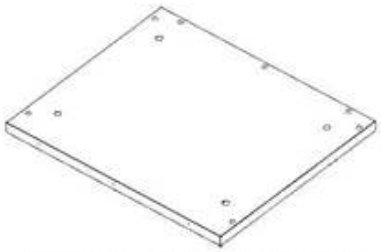

T14 CABINET TABLETOP PANEL ASSEMBLY - A4M04701
(x1) 28 1/8"x24 1/8"x1 1/4" (32x612x715)

- FLUSH BACK AND SIDES OF PANEL ASSEMBLY.
- SQUARE ALL SIDES OF CABINET BEFORE TIGHTENING HARDWARE.

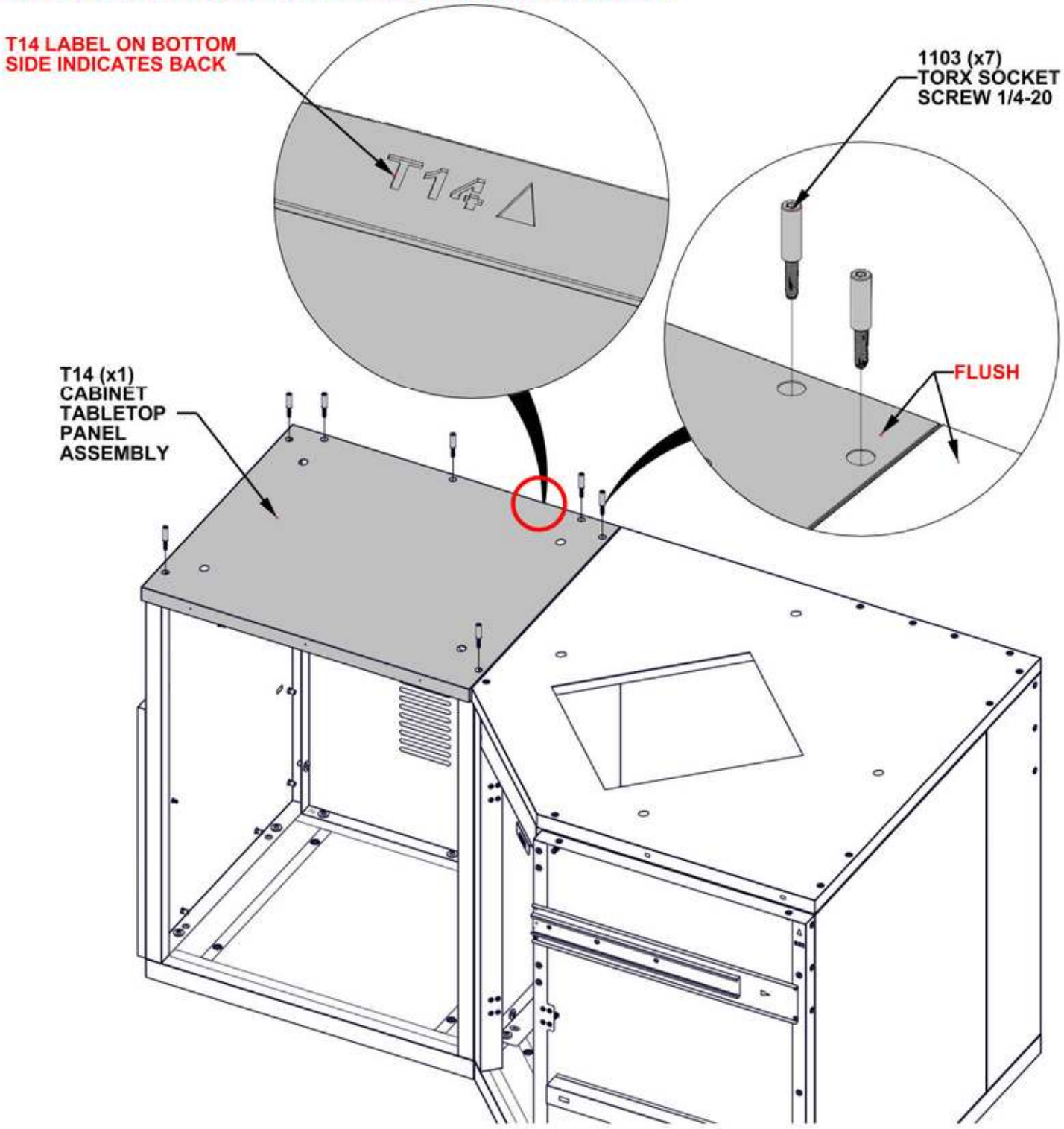

STEP 20A - CABINET ASSEMBLY

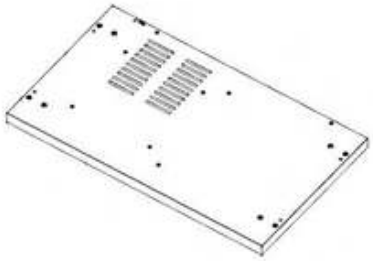

F10 CABINET FLOOR PANEL ASSEMBLY - A4M04834
(x1) 2 5/8"x23 3/8"x40 3/8" (66x594x1025)

- POSITION FLOOR PANEL AS SHOWN BELOW.
- EACH FLOOR PANEL HAS FACTORY INSTALLED ADJUSTABLE FEET. USE PROVIDED HEX DRIVER TO ADJUST EACH FOOT UNTIL PANEL IS LEVEL.

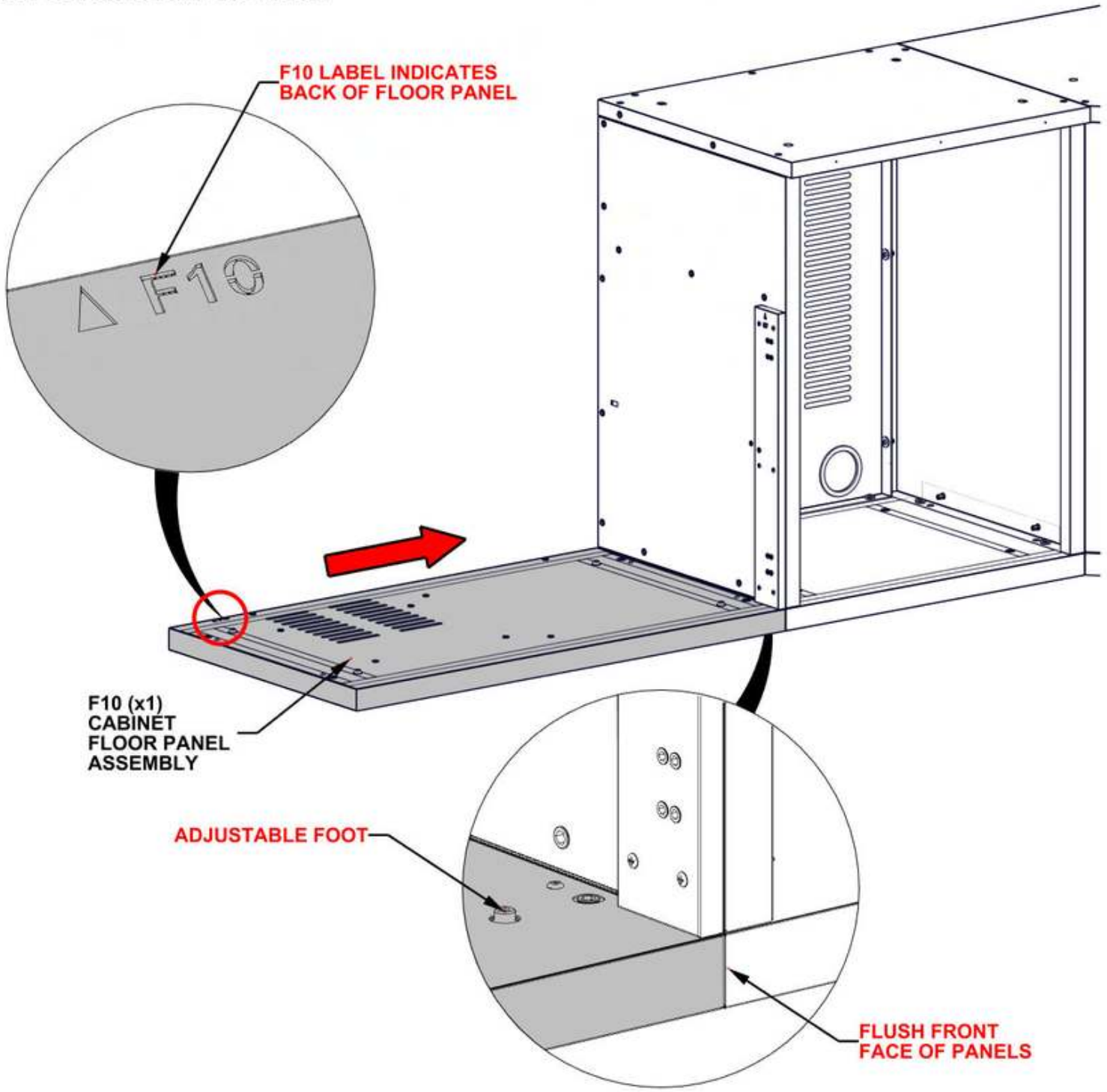

STEP 20B - CABINET ASSEMBLY

Qty	PartNo	Description
4	H101202	TORX PAN HEAD 1/4-20x3/4 ASSY

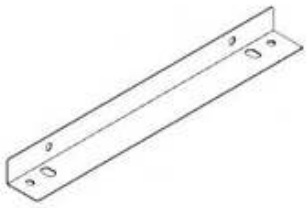

A6 ANGLED BRACKET - A4M03053
(x1) 1 3/8"x1 15/16"x17 1/8" (35x50x435)

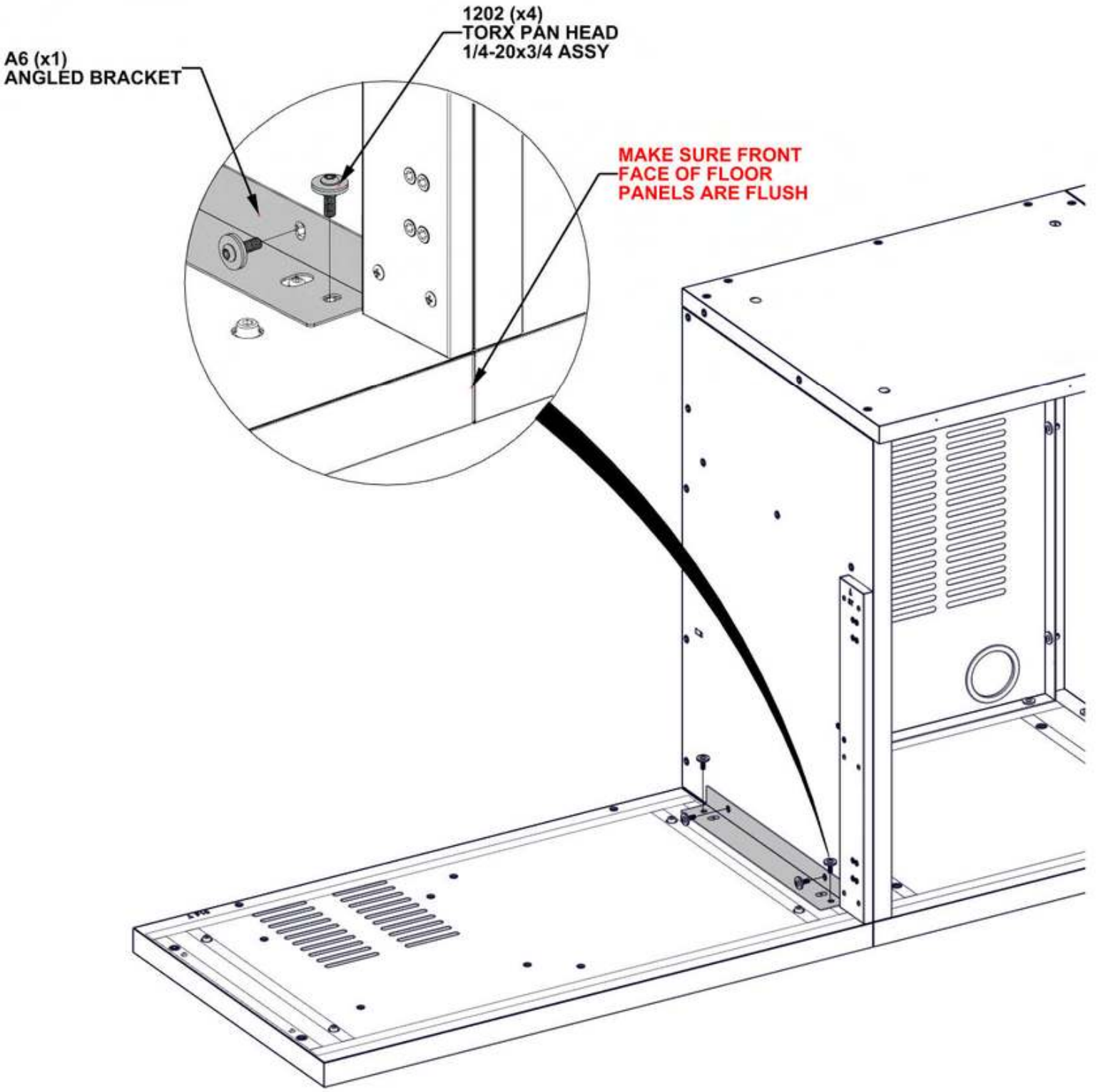

STEP 21 - CABINET ASSEMBLY

Qty	PartNo	Description
2	H101202	TORX PAN HEAD 1/4-20x3/4 ASSY



S27 CABINET SIDE PANEL ASSEMBLY - A4M04835
(x1) 33 7/16"x23 3/8"x2 13/16" (71.00x594.00x849.00)

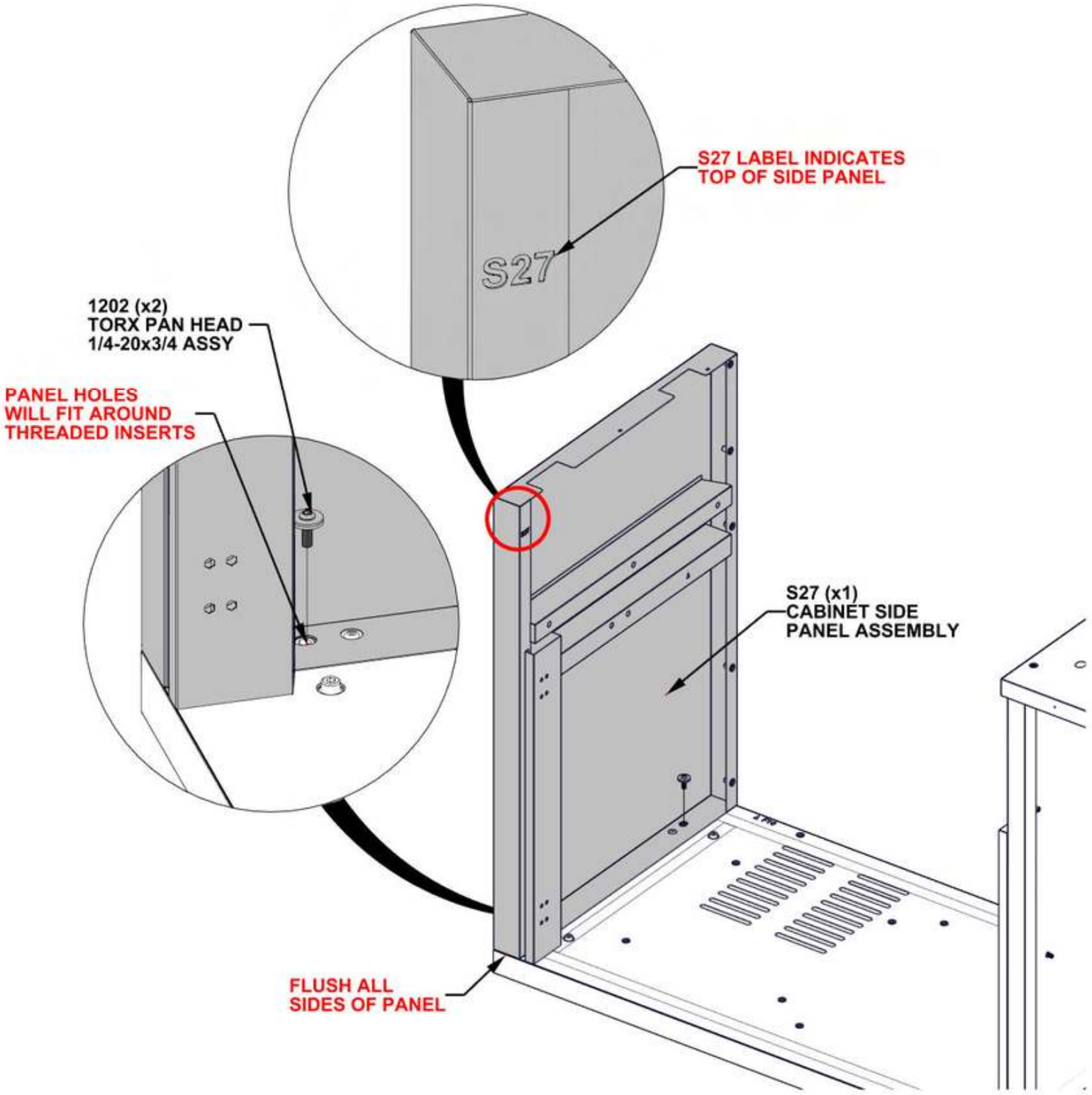

STEP 22 - CABINET ASSEMBLY

Qty	PartNo	Description
8	H101202	TORX PAN HEAD 1/4-20x3/4 ASSY

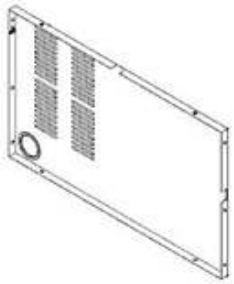

G10 CABINET BACK PANEL ASSEMBLY - A4M03055
(x1) 1 3/16"x22 7/8"x38 3/16" (30x581x970)

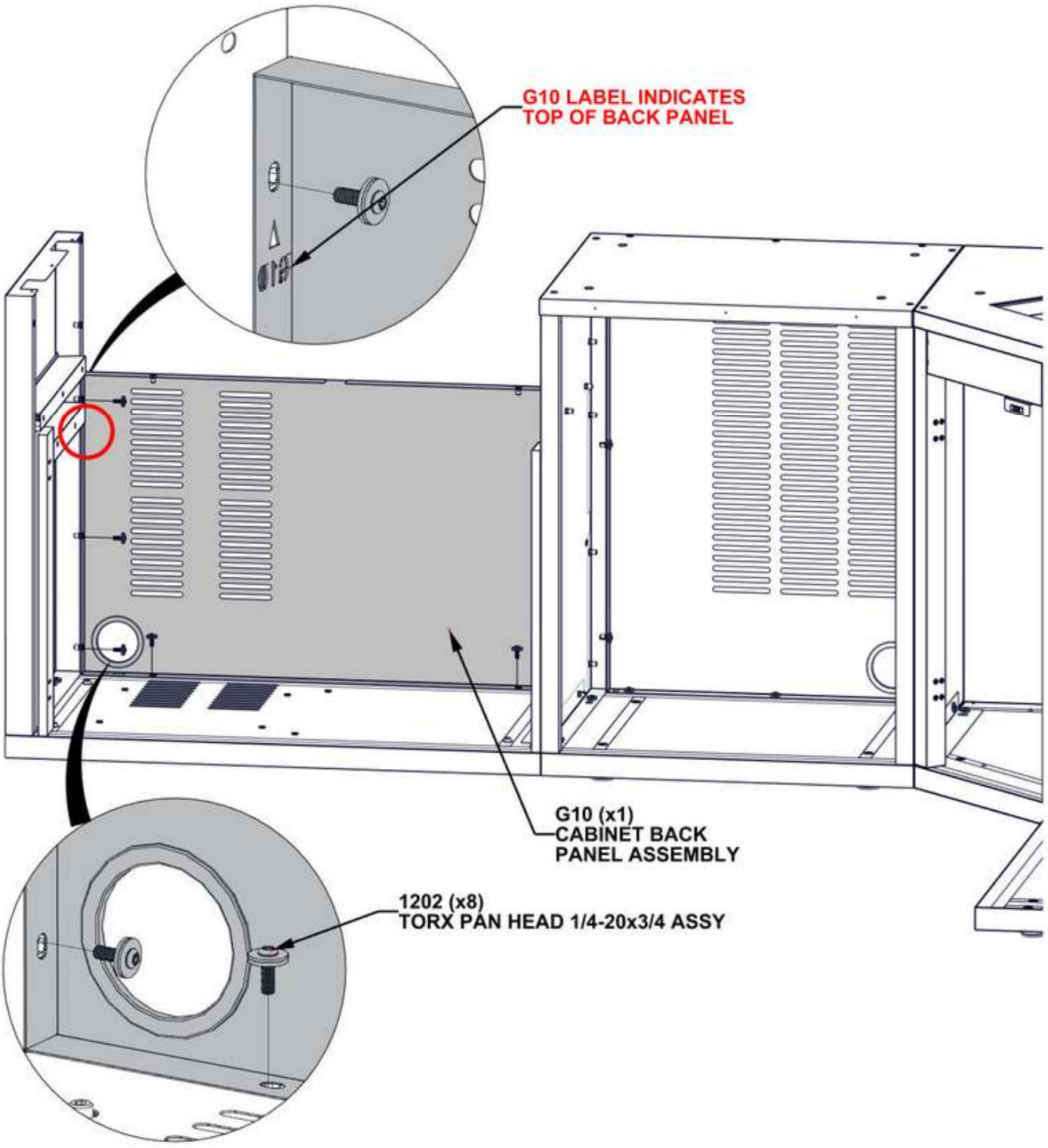

STEP 23 - CABINET ASSEMBLY

Qty	PartNo	Description
2	H101202	TORX PAN HEAD 1/4-20x3/4 ASSY

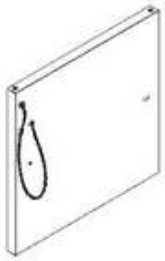

S6 CABINET SIDE PANEL ASSEMBLY M - A4M03586
(x1) 23 3/8"x22 7/8"x1 3/8" (35x581x593)

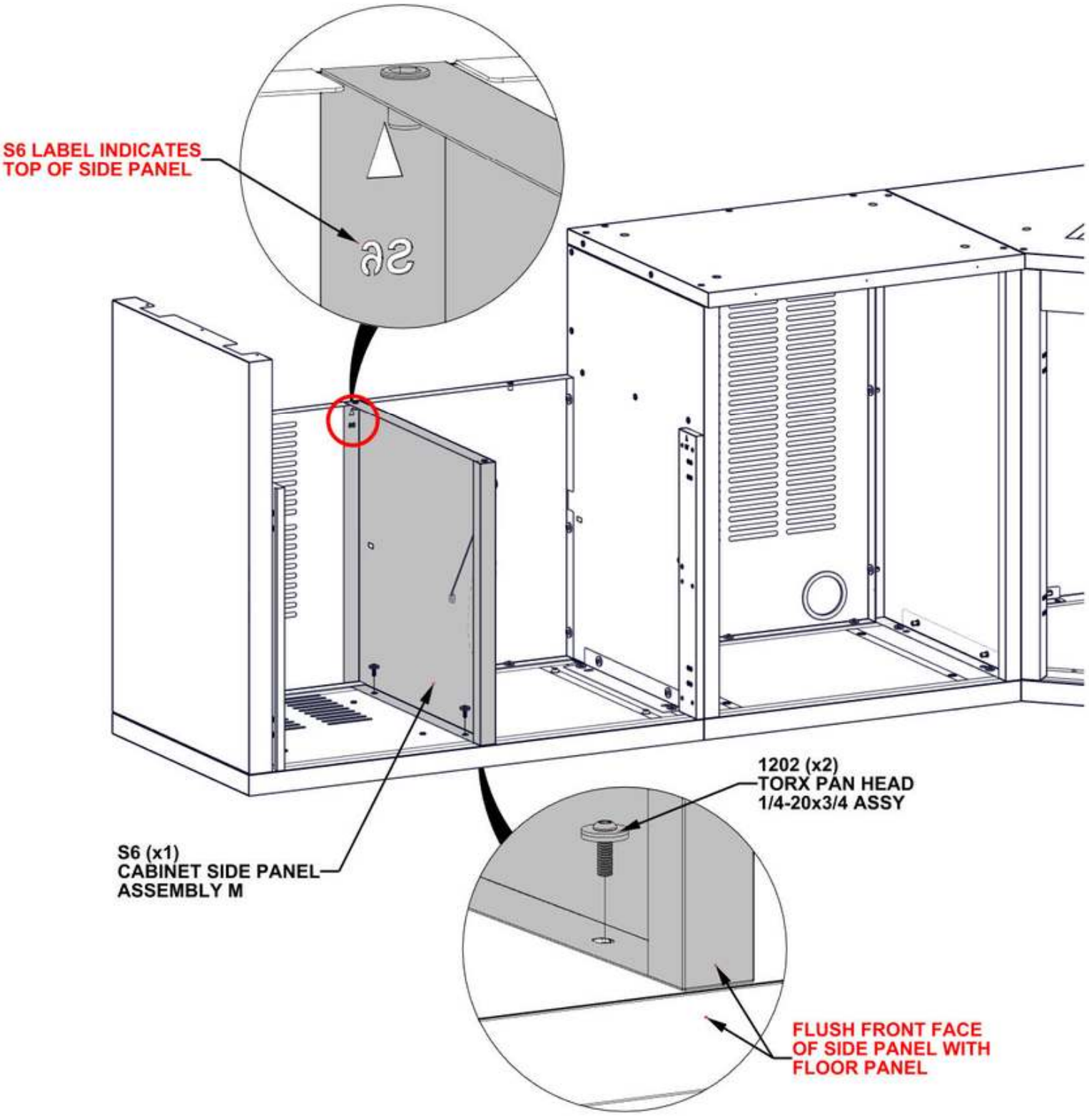

STEP 24A - CABINET ASSEMBLY

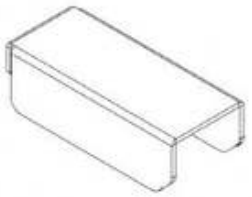

A5 SHELF BRACKET - A4M03141
(x2) 5/8"x7/8"x2 1/16" (16x22x53)

- ATTACH SHELF BRACKETS ON BOTH SIDES OF CENTER CABINET.

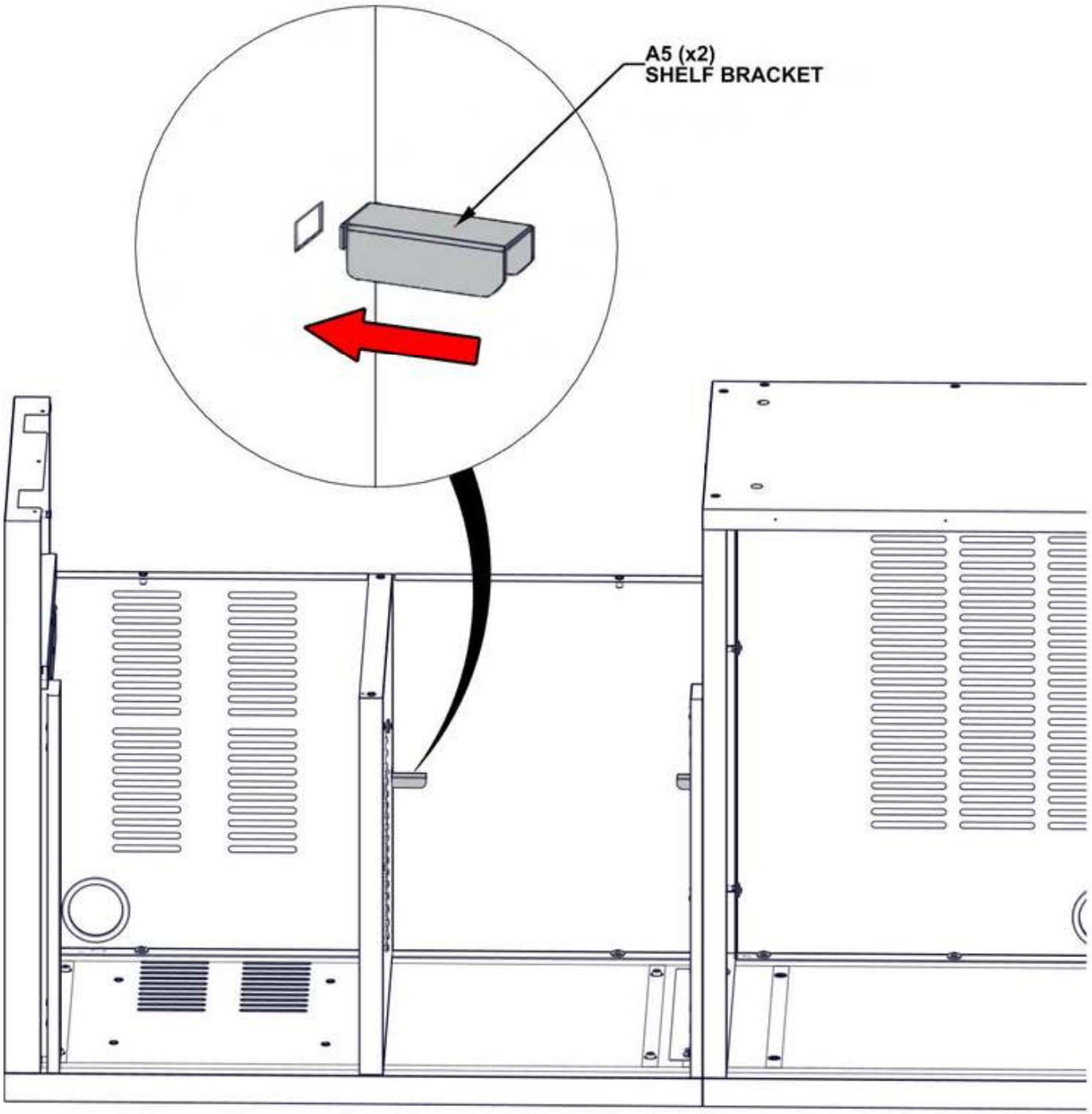

STEP 24B - CABINET ASSEMBLY

Qty	PartNo	Description
3	H101289	PAN HEAD SCREW 8-32x1/2" SS

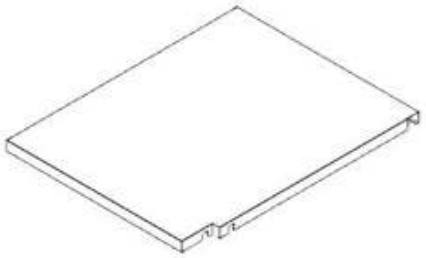

L2 CABINET SHELF - A4M03589
(x1) 23 1/4"x18 3/8"x1" (25.00x467.00x591.00)

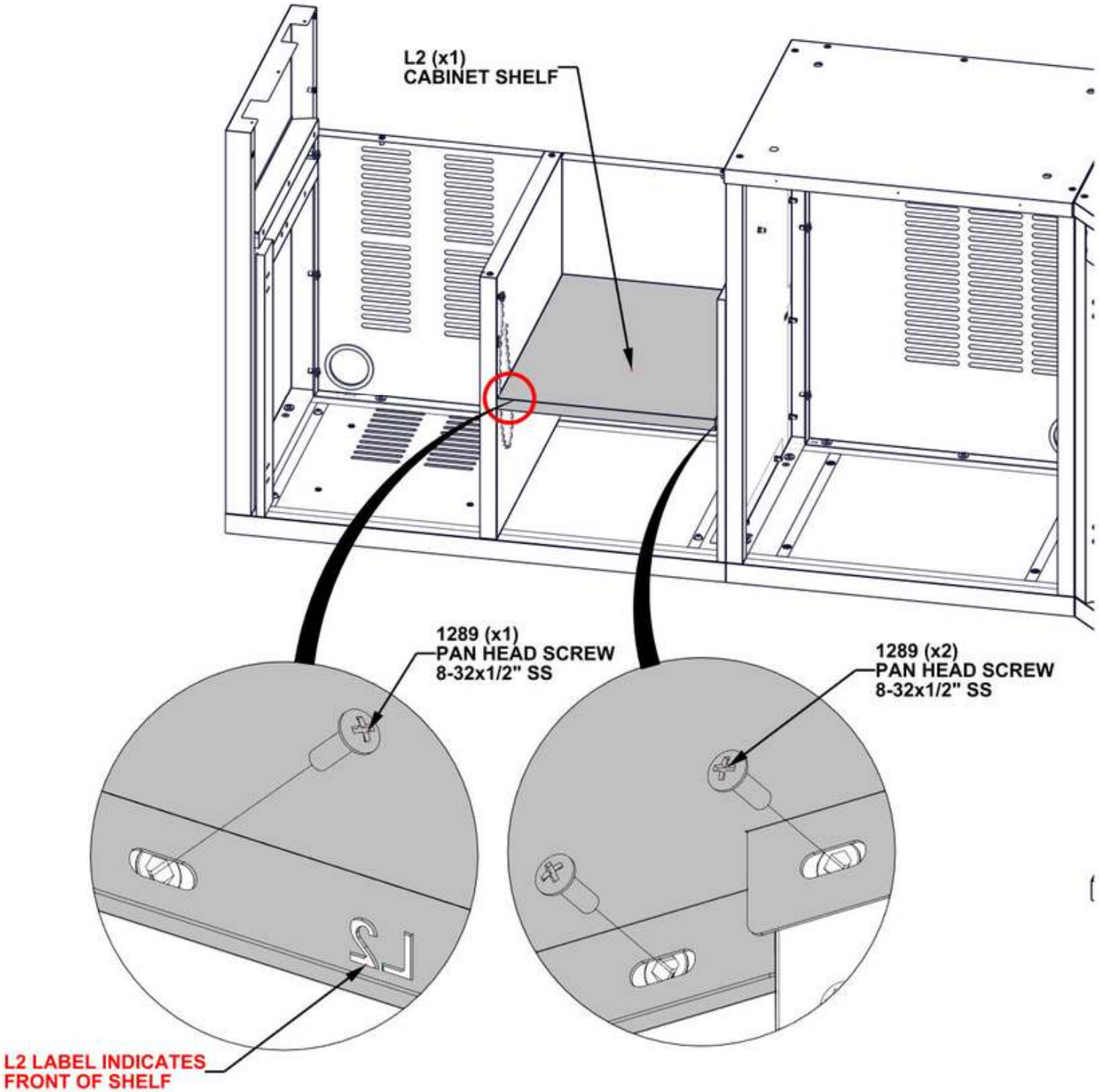

STEP 25 - CABINET ASSEMBLY

Qty	PartNo	Description
2	H101202	TORX PAN HEAD 1/4-20x3/4 ASSY

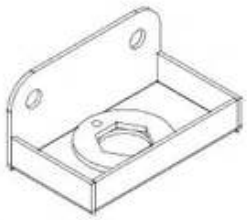

A9 HOSE BRACKET ASSEMBLY - A4M03060
(x1) 1 1/4"x1 7/16"x2 9/16" (31.5x36.5x65)

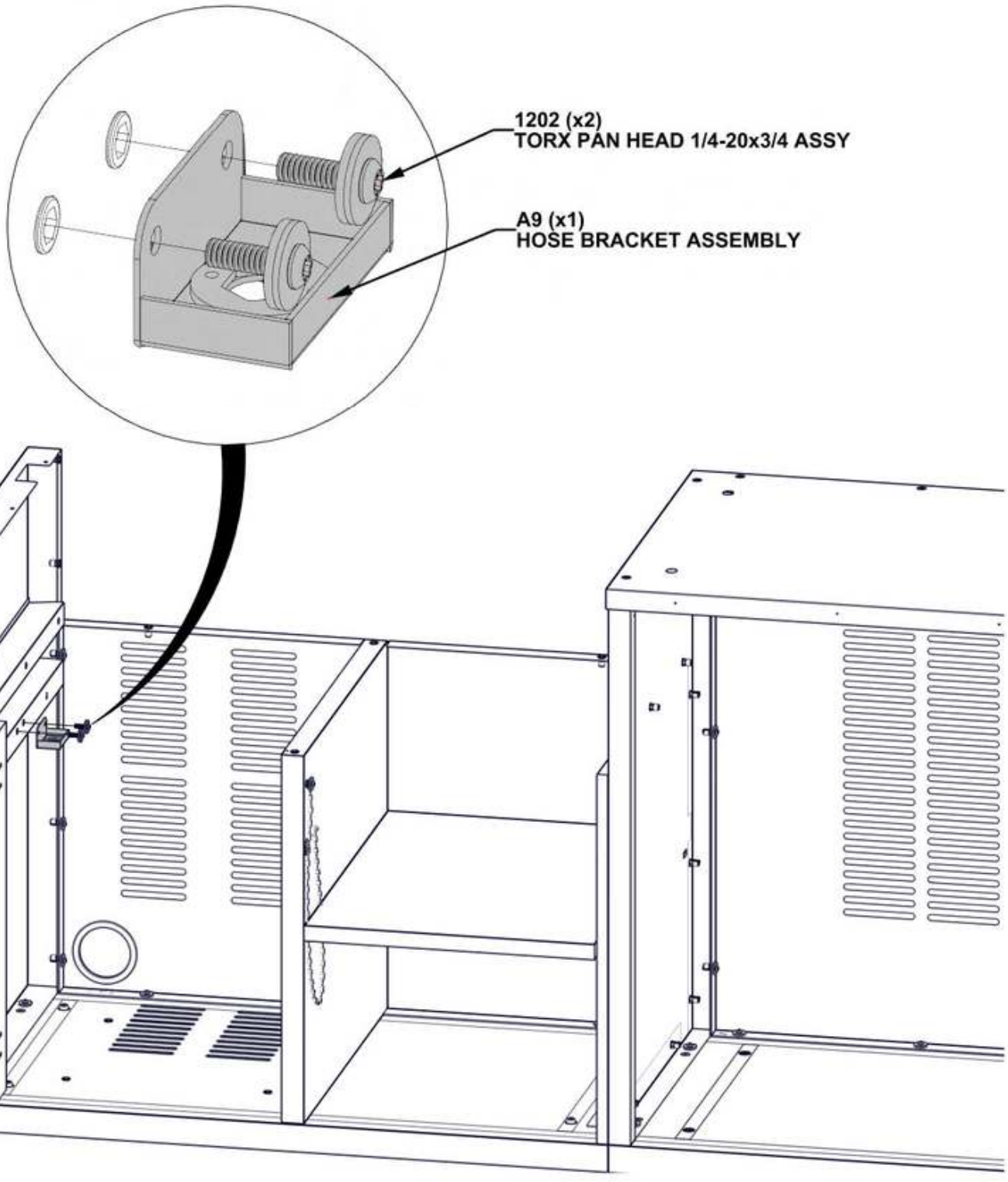

STEP 26 - CABINET ASSEMBLY

Qty	PartNo	Description
4	H101292	TORX PAN HEAD 1/4-20x13/32"

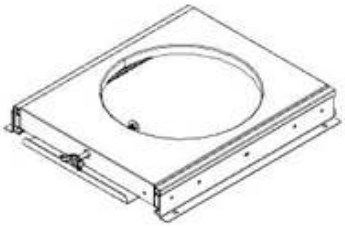

A13 GAS TANK HOLDER ASSEMBLY - A4M03047
(x1) 1 15/16"x12 7/8"x14 3/4" (49x327x374)

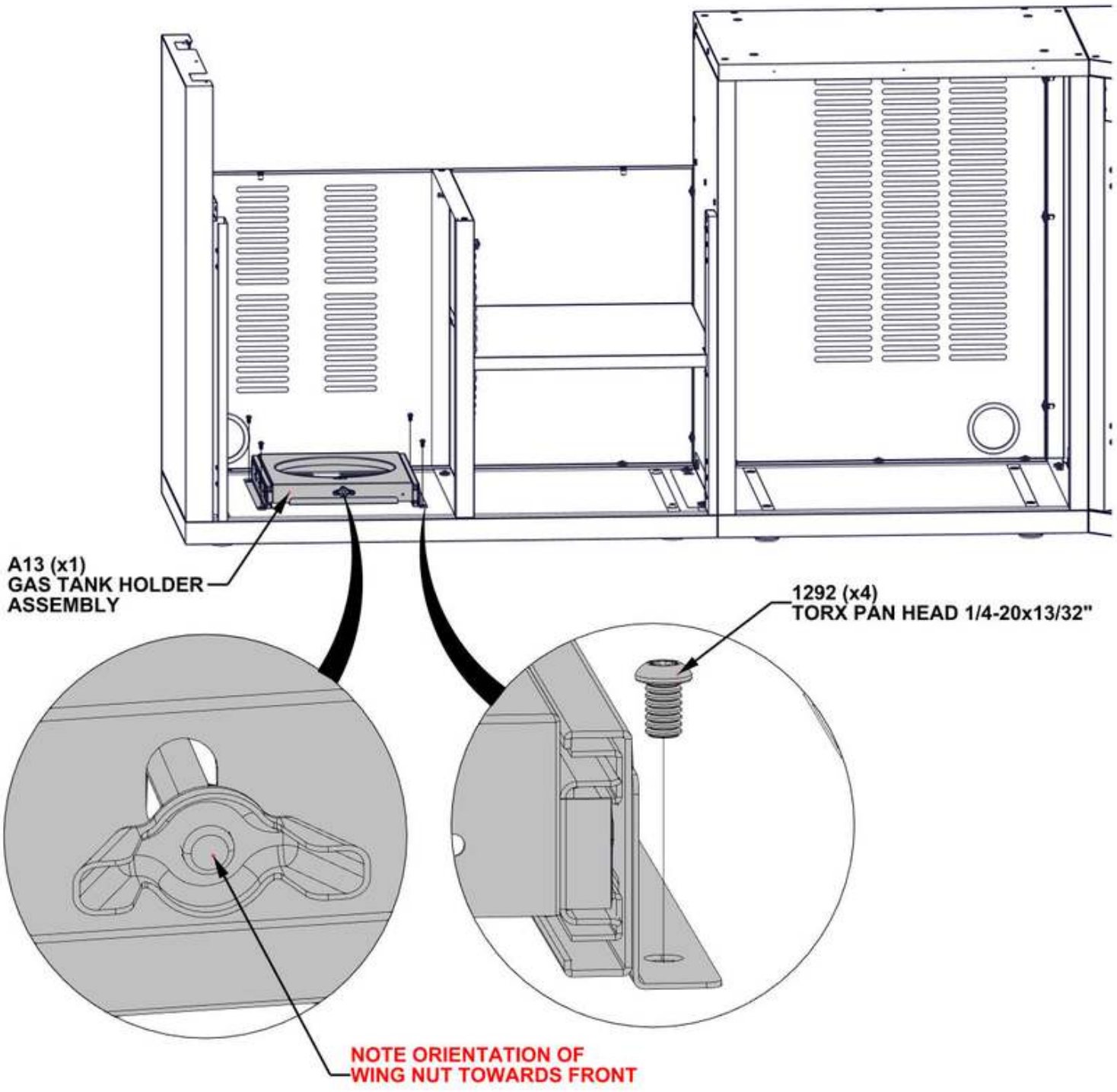

STEP 27A - CABINET ASSEMBLY

Qty	PartNo	Description
4	H101289	PAN HEAD SCREW 8-32x1/2" SS

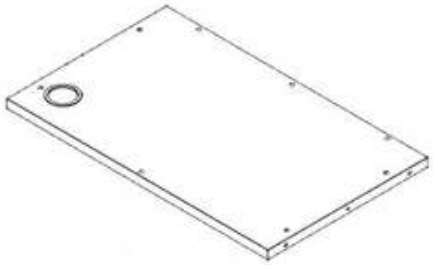

T13 TABLETOP ASSEMBLY - A4M04668
(x1) 1 1/4"x23 3/8"x38 3/16" (32x594x970)



A2 MAGNET BRACKET - A4M03026
(x2) 1"x1 1/4"x3 1/8" (25x31x80)

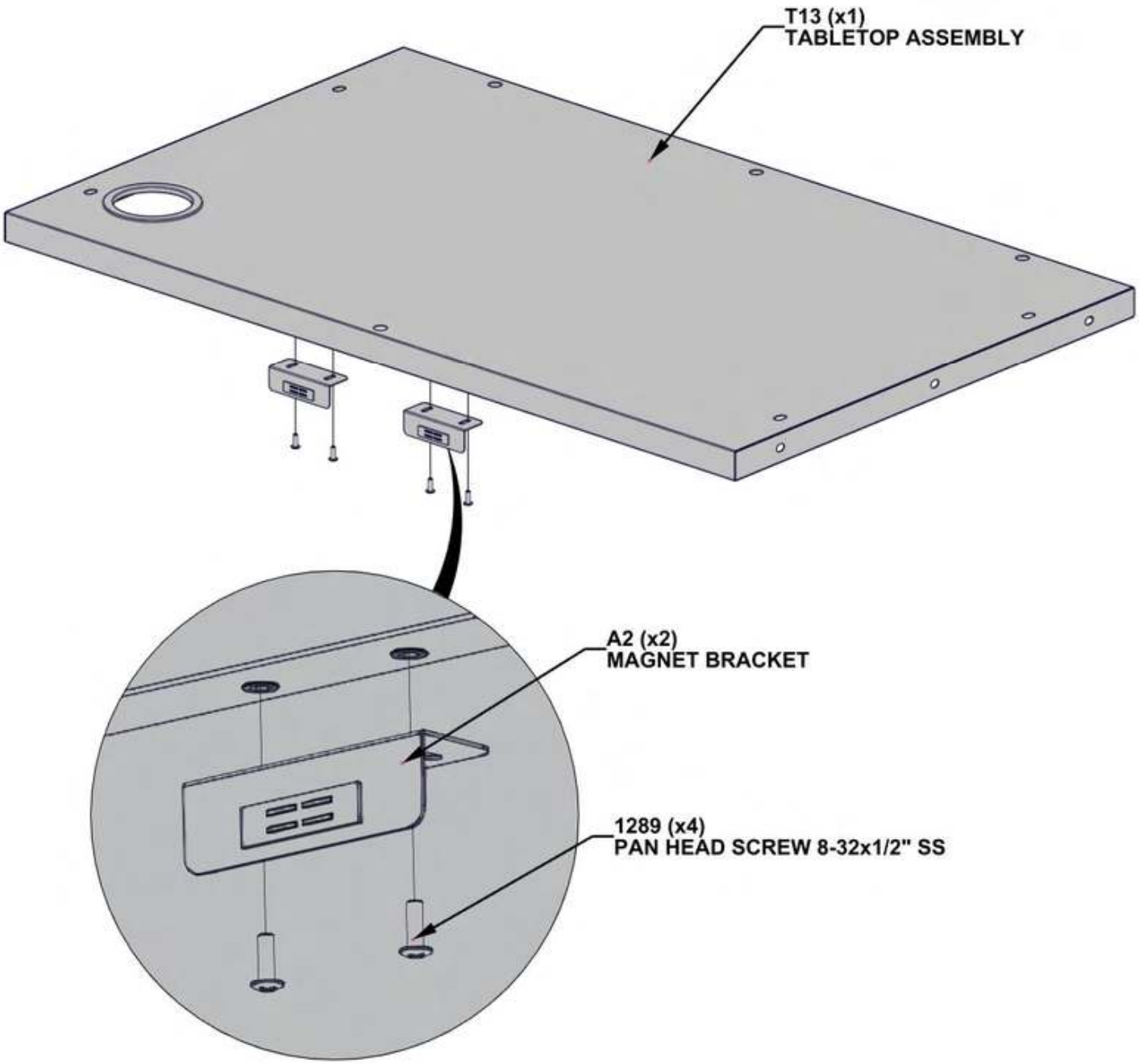

STEP 27B - CABINET ASSEMBLY

Qty	PartNo	Description
6	H101202	TORX PAN HEAD 1/4-20x3/4 ASSY

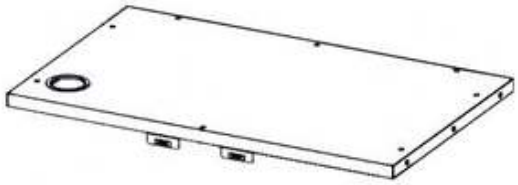

CABINET ASSEMBLY FROM STEP 27A

- HARDWARE ATTACHES ON INSIDE OF CABINET

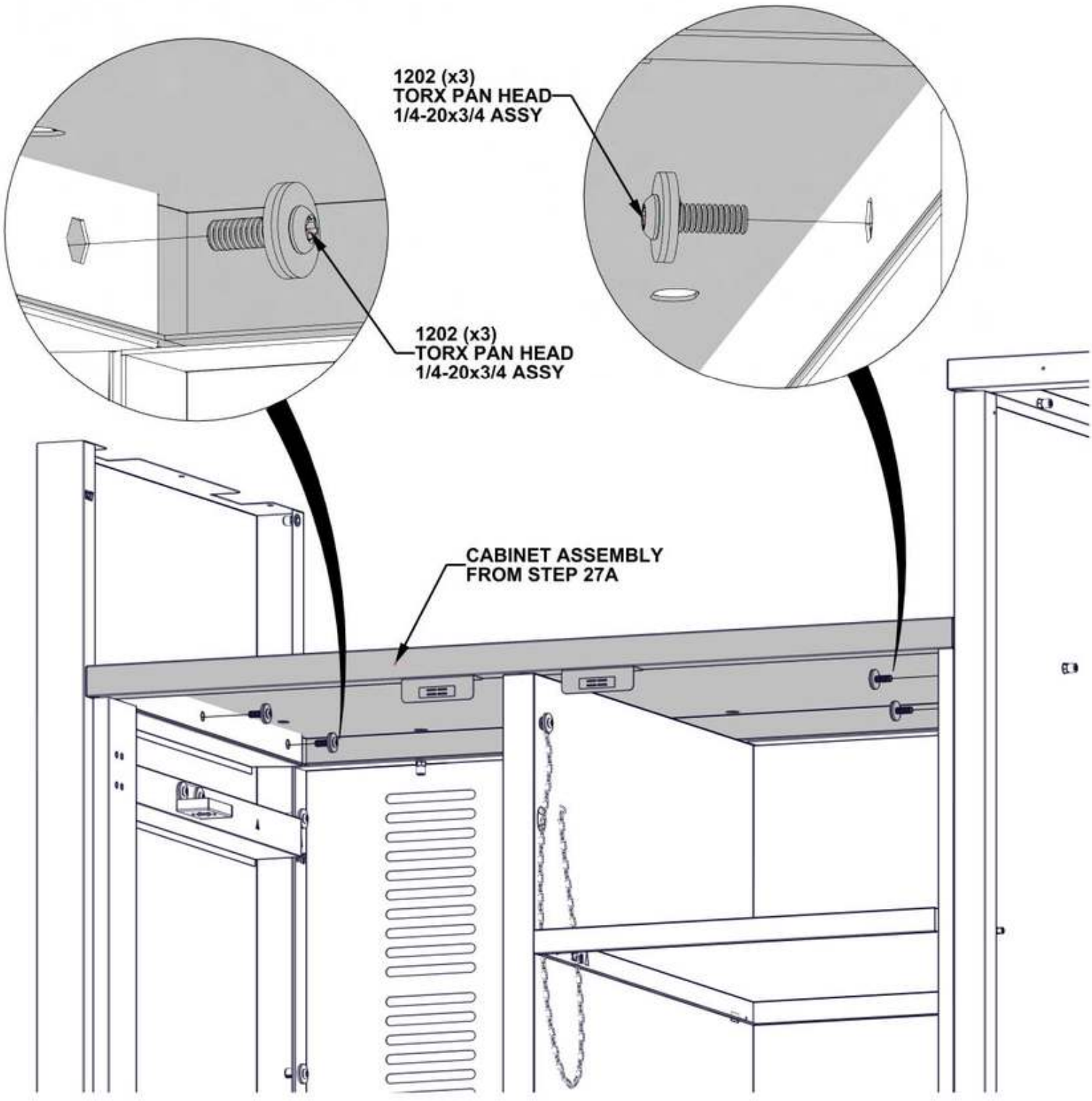

STEP 27C - CABINET ASSEMBLY

Qty	PartNo	Description
4	H101103	TORX SOCKET SCREW 1/4-20

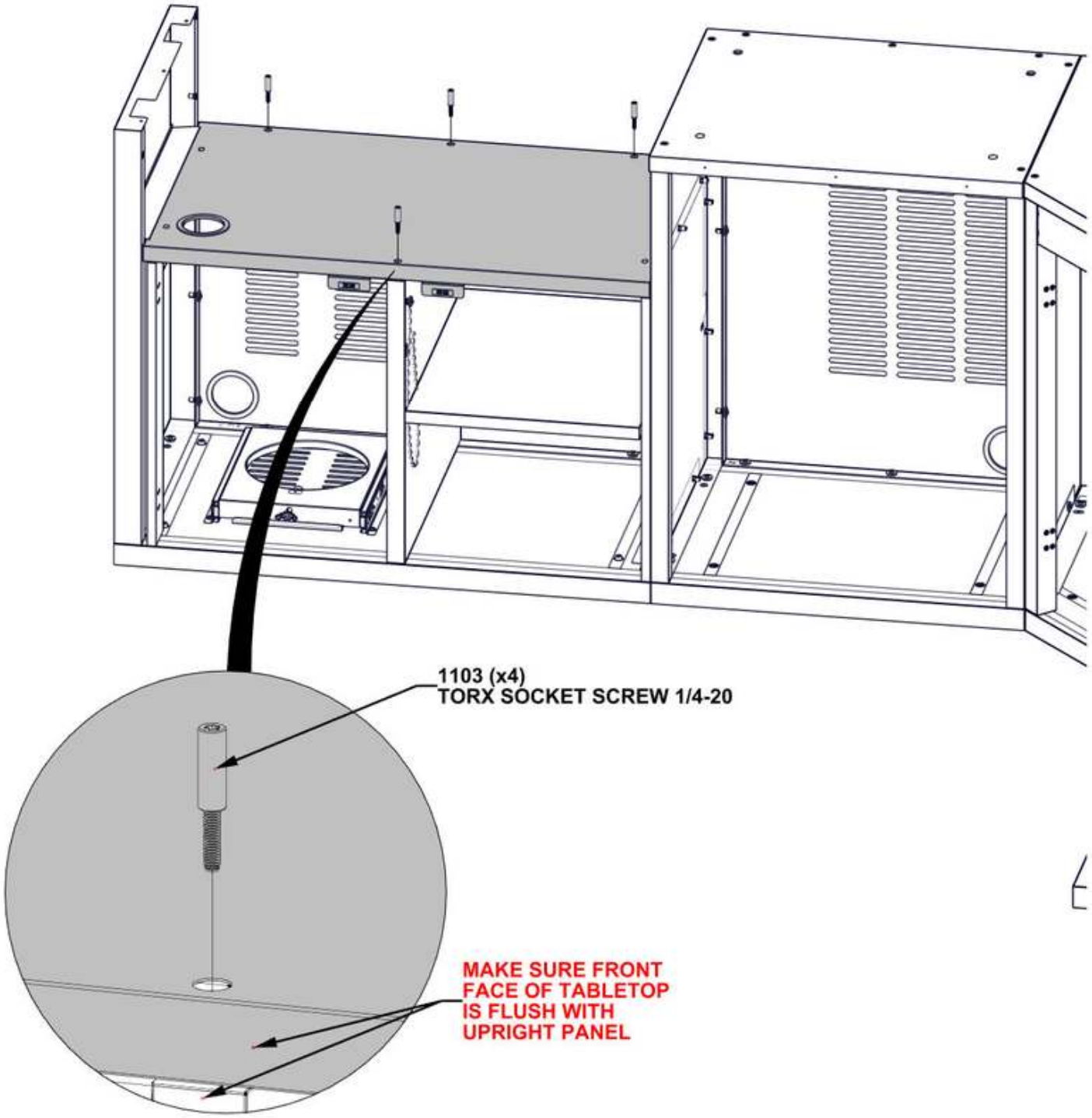

STEP 28 - CABINET ASSEMBLY

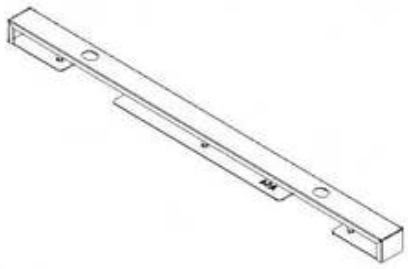

Qty	PartNo	Description
3	H101289	PAN HEAD SCREW 8-32x1/2" SS

A14 COUNTERTOP BRACKET ASSEMBLY - A4M04846
(x1) 24 3/16"x1 3/8"x1 1/4" (31.00x35.00x614.00)

- ALIGN SCREW HOLES.

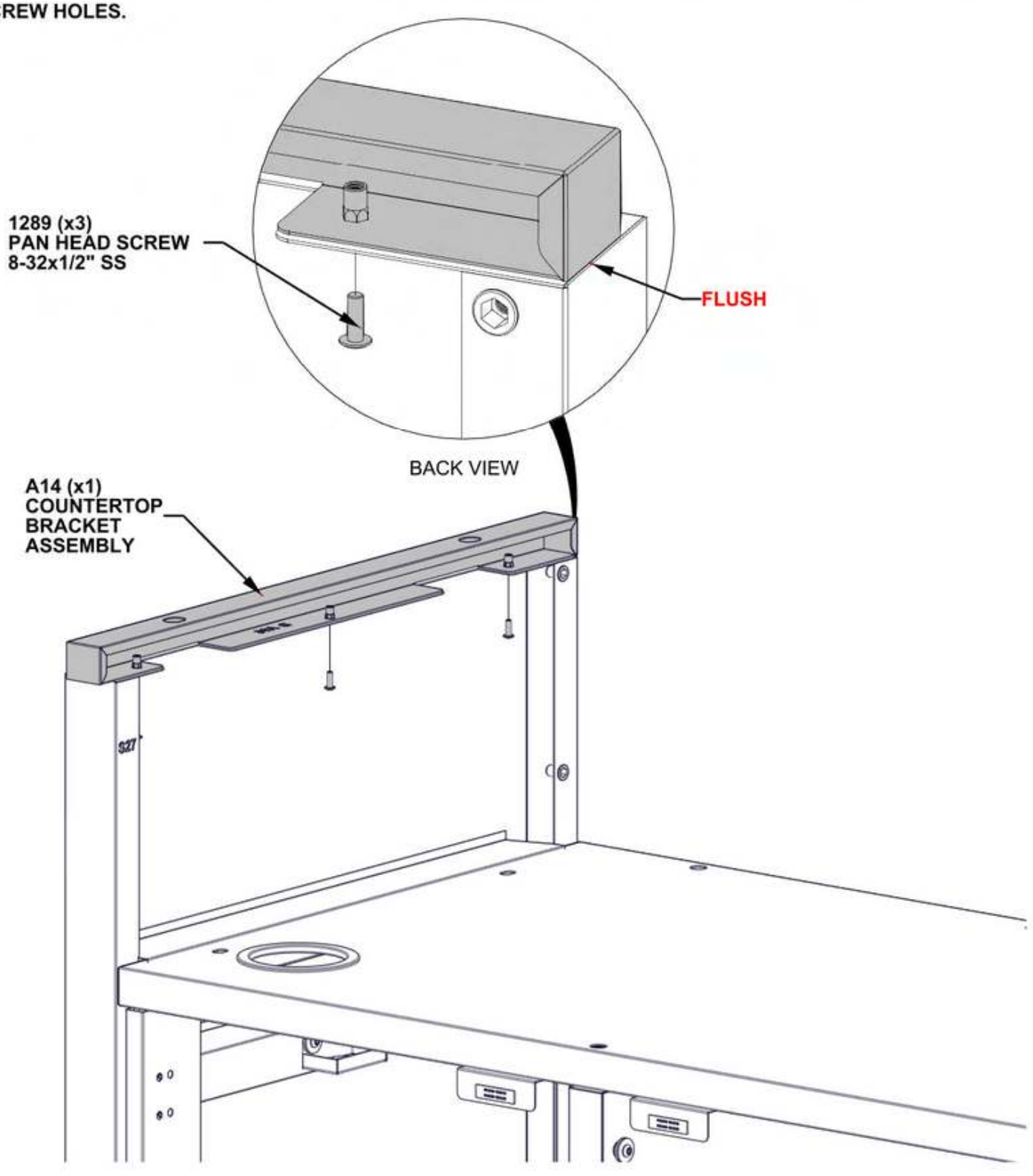

STEP 29 - CABINET ASSEMBLY

Qty	PartNo	Description
4	H101202	TORX PAN HEAD 1/4-20x3/4 ASSY

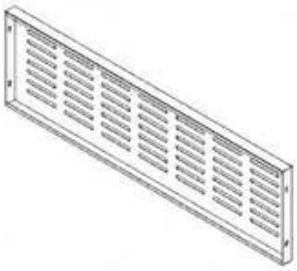

G11 VENTILATION PANEL - A4M03056
(x1) 1 5/16"x11 3/16"x38 3/16" (33x284x970)

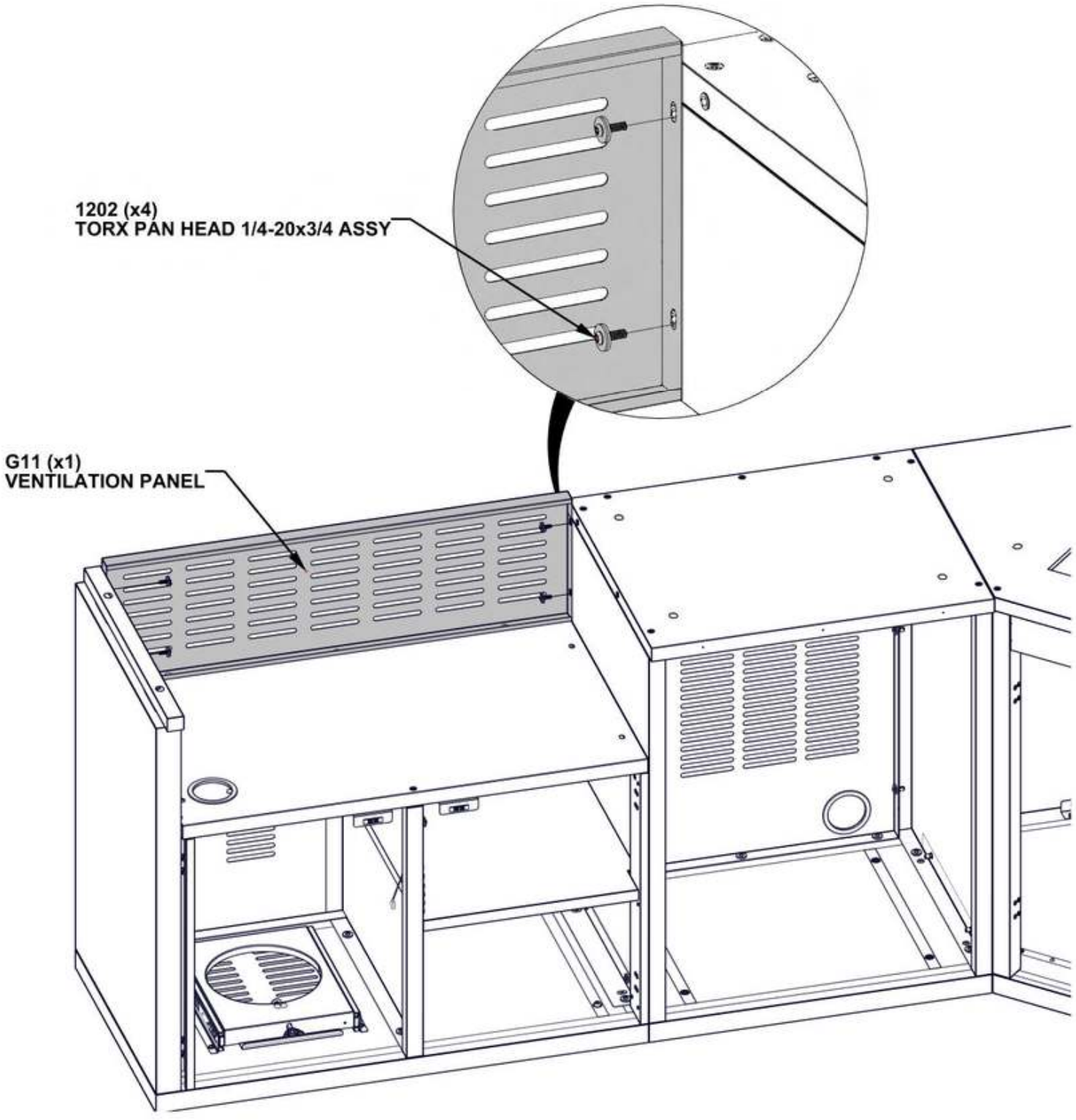

STEP 30 - LEFT STORAGE CABINET ASSEMBLY

Qty	PartNo	Description
2	H101202	TORX PAN HEAD 1/4-20x3/4 ASSY



S31 CABINET SIDE PANEL ASSEMBLY - A4M04838
(x1) 33 3/8"x23 3/8"x1 15/16" (49.00x594x848.20)

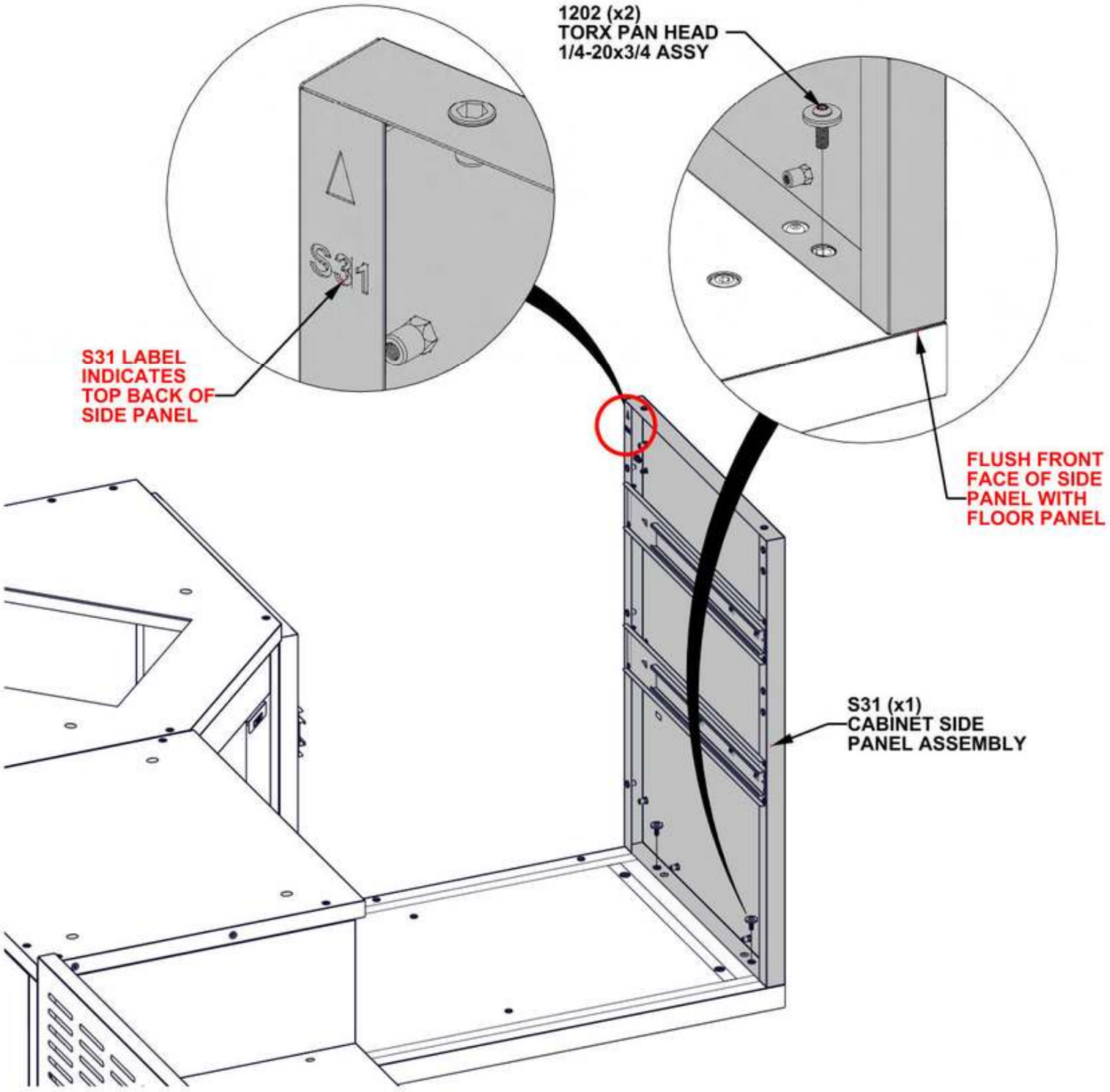

STEP 31 - LEFT STORAGE CABINET ASSEMBLY

Qty	PartNo	Description
6	H101287	PAN HEAD SCREW 8-32x1" SS

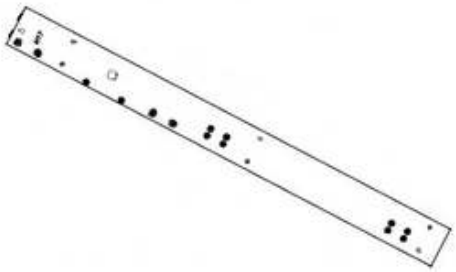

H17 HINGE CHANNEL ASSEMBLY - A4M04841
(x1) 33 3/8"x2 15/16"x11/16" (18.00x74.80x847.00)

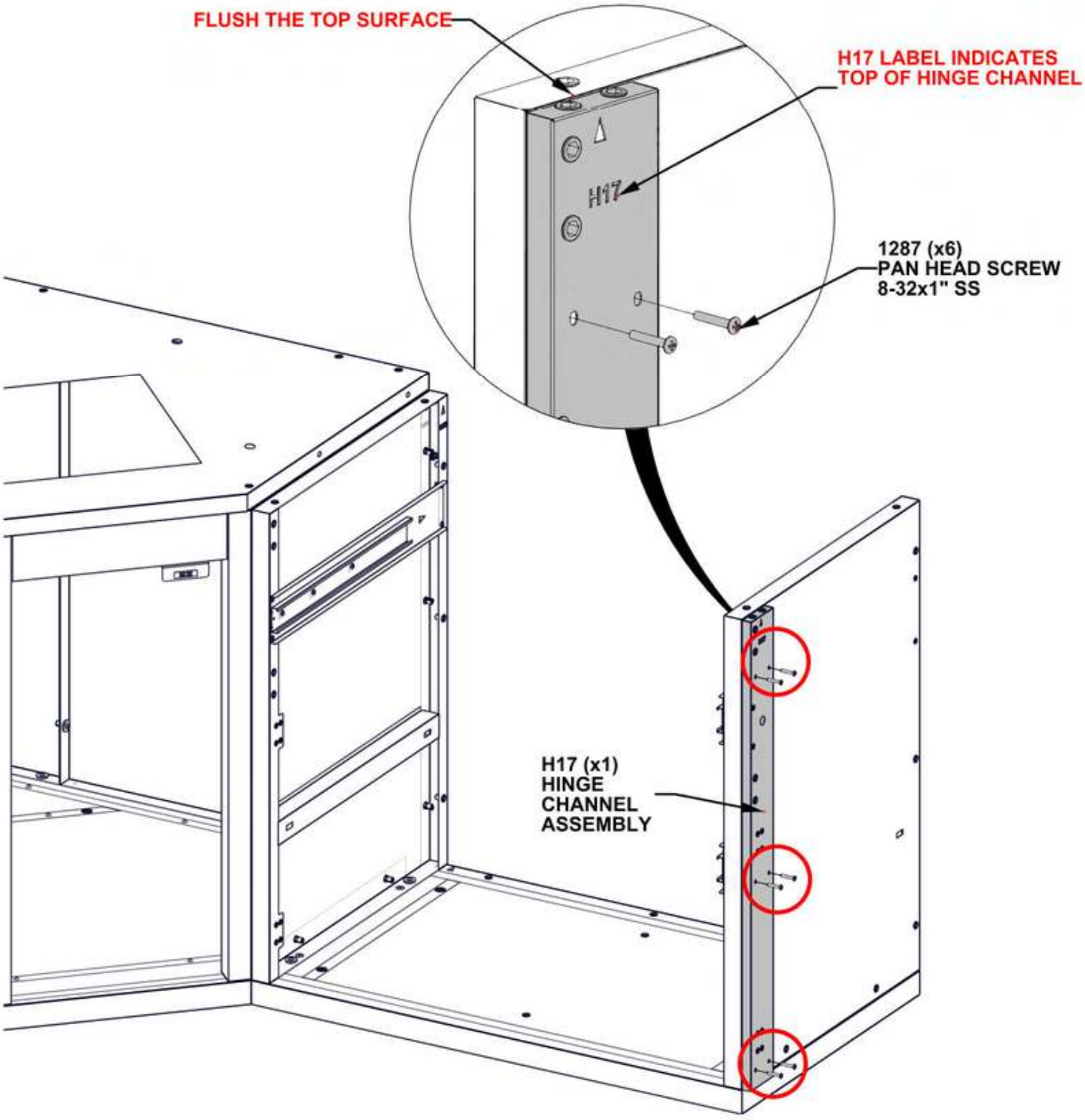

STEP 32 - LEFT STORAGE CABINET ASSEMBLY

Qty	PartNo	Description
9	H101202	TORX PAN HEAD 1/4-20x3/4 ASSY



G15 CABINET BACK PANEL ASSEMBLY - A4M04707
(x1) 34 5/16"x33 3/8"x1 3/16" (30x847.2x1049)

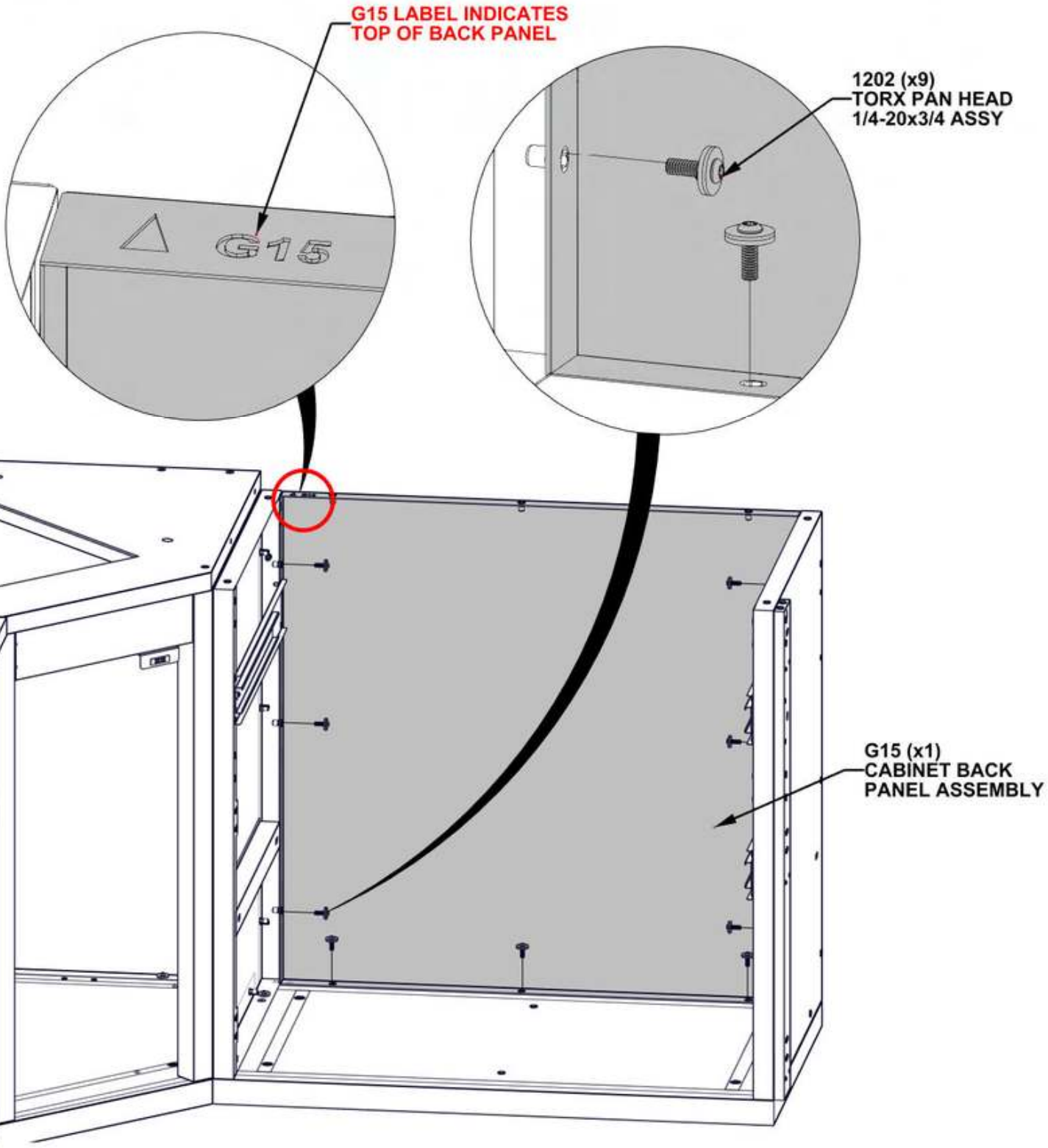

STEP 33 - LEFT STORAGE CABINET ASSEMBLY

Qty	PartNo	Description
2	H101202	TORX PAN HEAD 1/4-20x3/4 ASSY

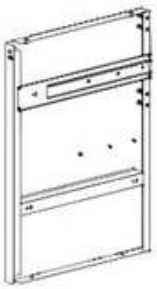

S24 (x1) CABINET SIDE PANEL ASSEMBLY M - A4M04705
33 3/8"x23 3/8"x2 3/16" (56.2x593x847)

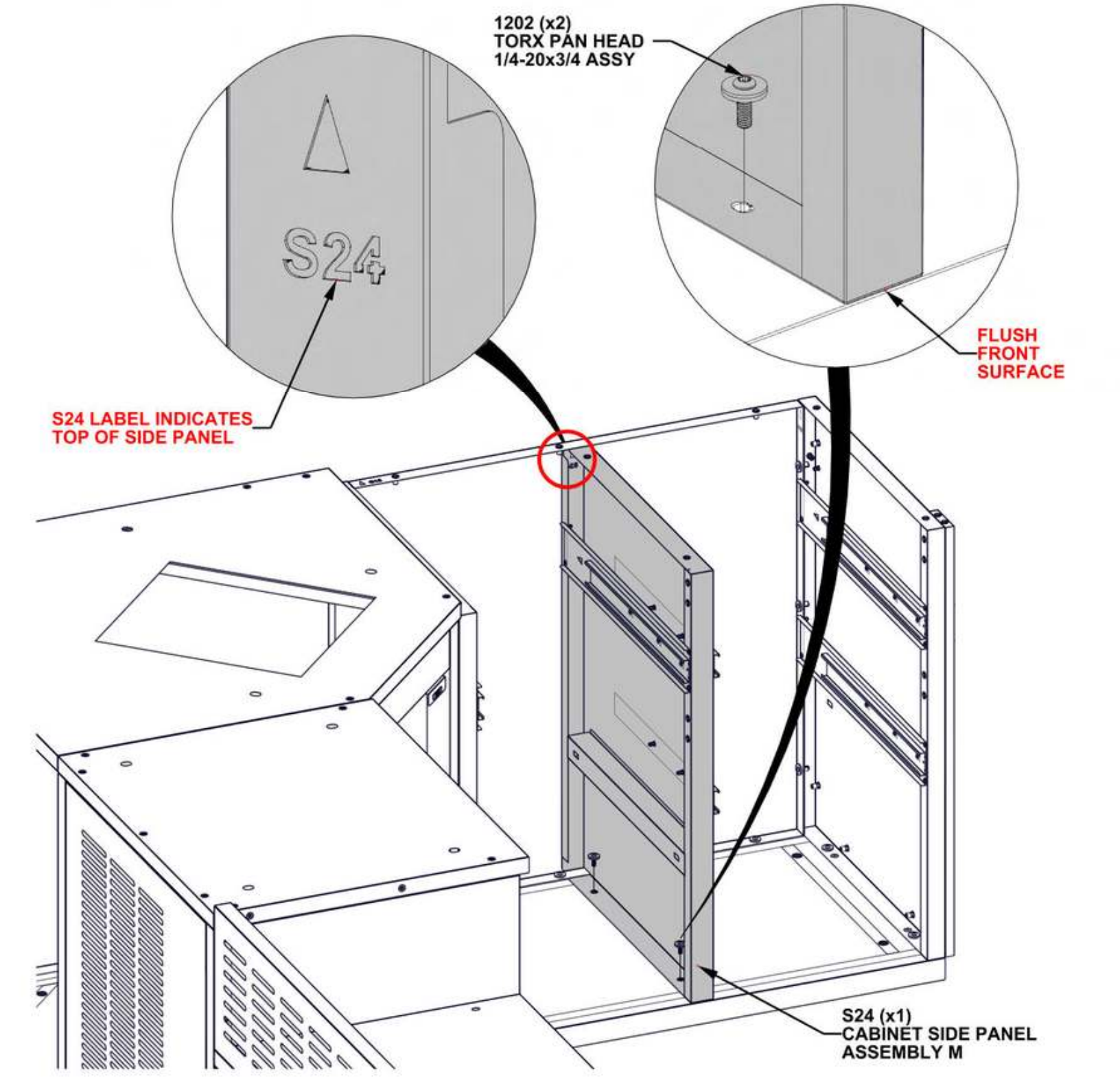

STEP 34 - LEFT STORAGE CABINET ASSEMBLY

Qty	PartNo	Description
16	H101202	TORX PAN HEAD 1/4-20x3/4 ASSY

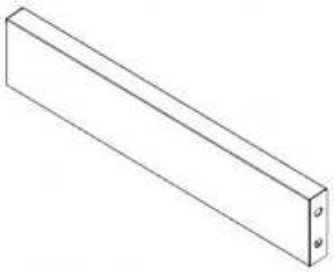

H4 CABINET HORIZONTAL BEAM ASSEMBLY - A4M03575
(x4) 16 1/4"x3 3/8"x1" (25x85x413)

- HARDWARE ATTACHES ON INSIDE OF CABINET

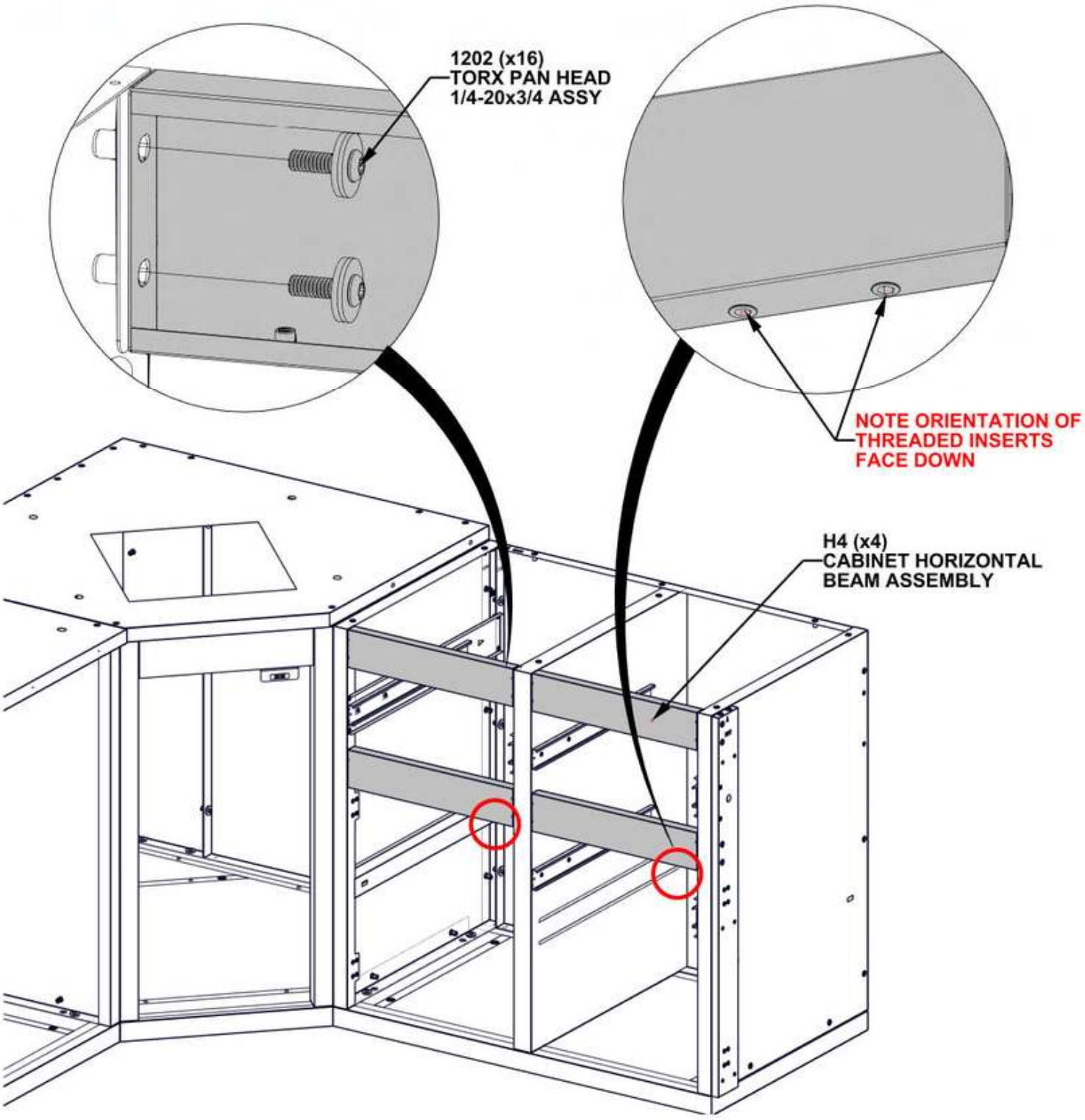

STEP 35 - LEFT STORAGE CABINET ASSEMBLY

Qty	PartNo	Description
2	H101289	PAN HEAD SCREW 8-32x1/2" SS



A2 MAGNET BRACKET - A4M03026
(x1) 1"x1 1/4"x3 1/8" (25x31x80)

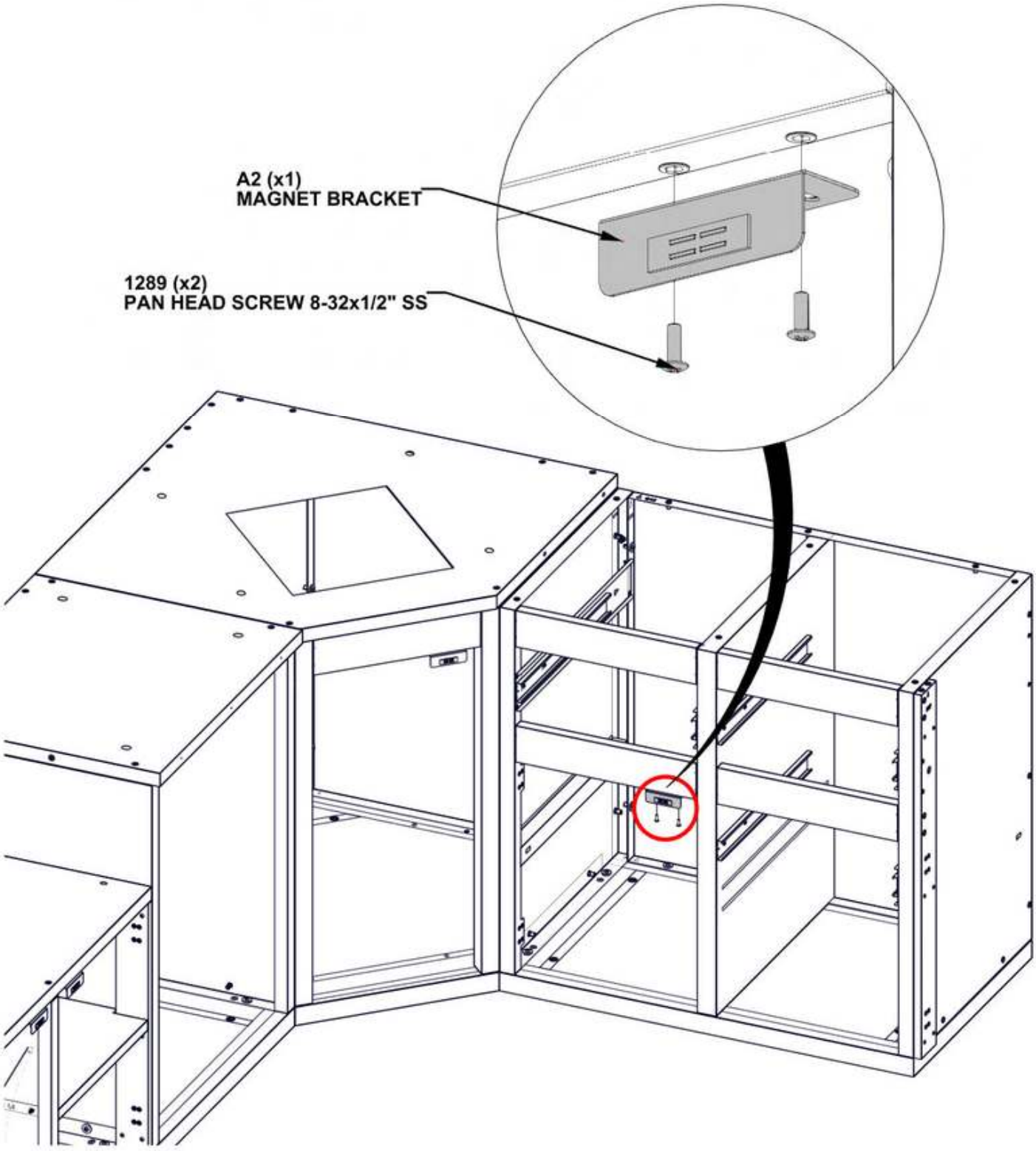

STEP 36 - LEFT STORAGE CABINET ASSEMBLY

Qty	PartNo	Description
9	H101103	TORX SOCKET SCREW 1/4-20

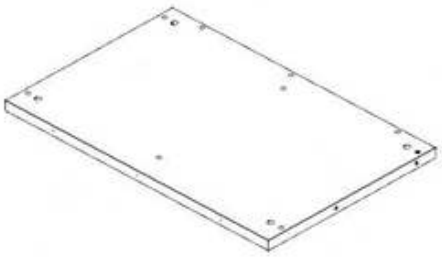

T16 CABINET TABLETOP ASSEMBLY - A4M04708
(x1) 37 3/16"x24 1/8"x1 1/4" (32x612x944)

- FLUSH BACK AND SIDES OF PANEL ASSEMBLY.
- SQUARE ALL SIDES OF CABINET BEFORE TIGHTENING HARDWARE.

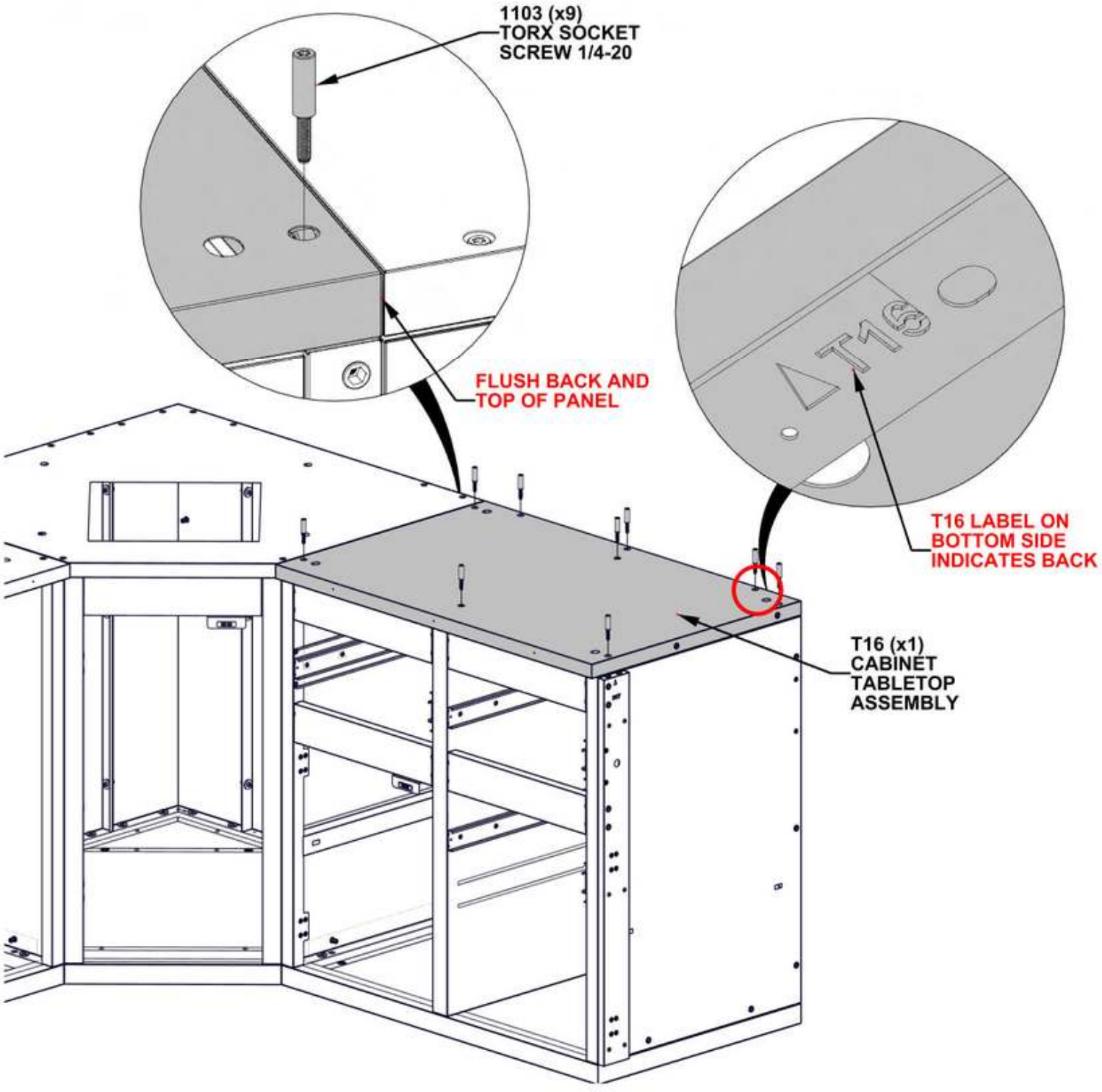

STEP 37 - CONNECT TABLETOPS

Qty	PartNo	Description
4	H101202	TORX PAN HEAD 1/4-20x3/4 ASSY

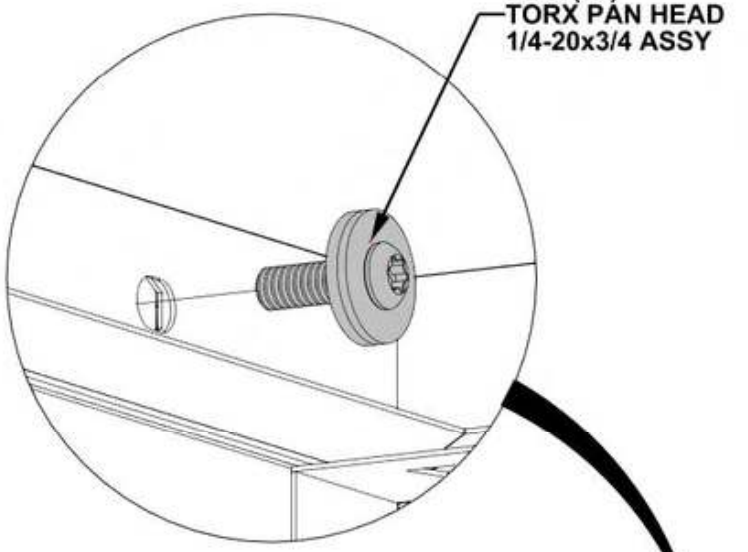

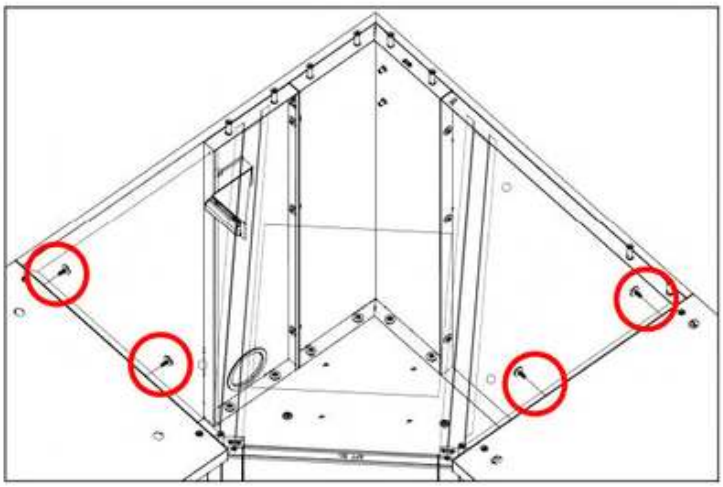

SCREW LOCATION

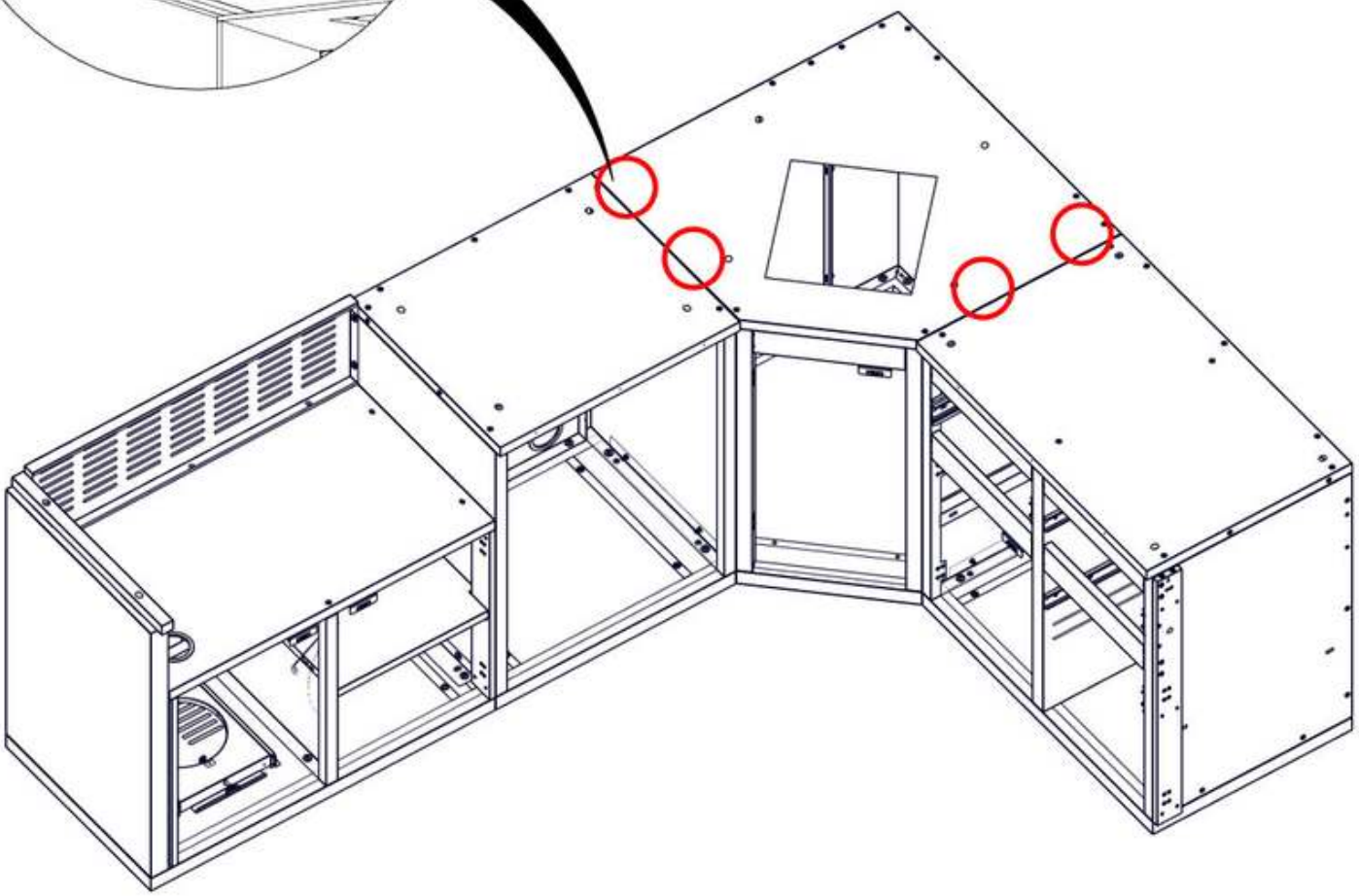

STEP 38 - RIGHT STORAGE CABINET ASSEMBLY

Qty	PartNo	Description
4	H101202	TORX PAN HEAD 1/4-20x3/4 ASSY

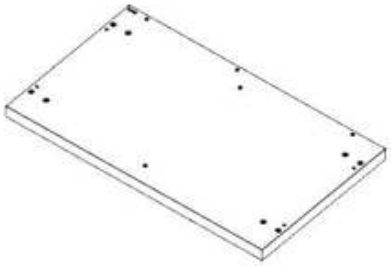

F11 CABINET FLOOR PANEL ASSEMBLY - A4M04840
(x1) 40 3/16"x23 3/8"x2 5/8" (66x594x1020)



A6 ANGLED BRACKET - A4M03053
(x1) 1 3/8"x1 15/16"x17 1/8" (35x50x435)

- POSITION FLOOR PANEL AS SHOWN BELOW.
- EACH FLOOR PANEL HAS FACTORY INSTALLED ADJUSTABLE FEET. USE PROVIDED HEX DRIVER TO ADJUST EACH FOOT UNTIL PANEL IS LEVEL.

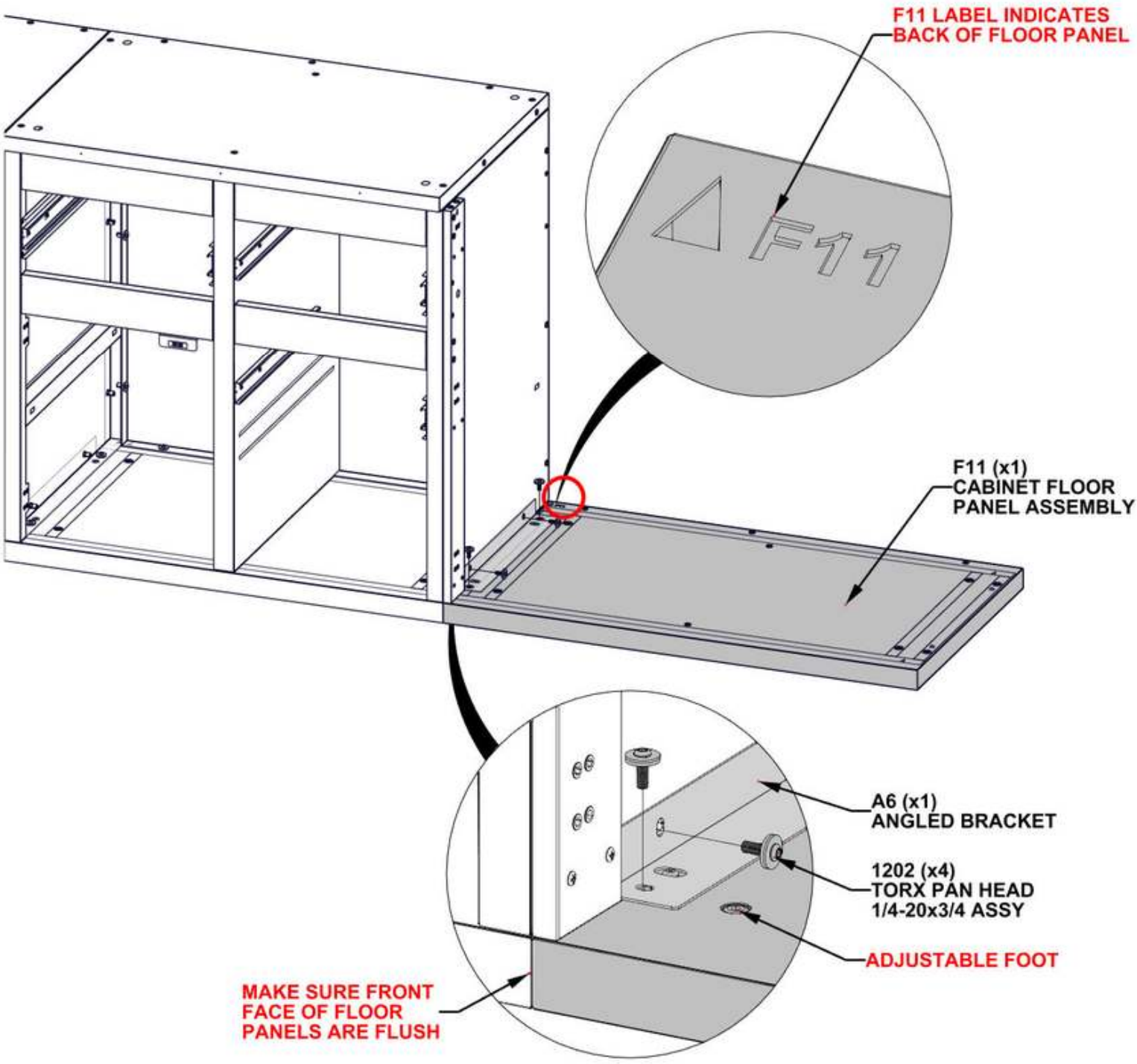

STEP 39 - RIGHT STORAGE CABINET ASSEMBLY

Qty	PartNo	Description
2	H101202	TORX PAN HEAD 1/4-20x3/4 ASSY



S33 CABINET SIDE PANEL ASSEMBLY - A4M04836
(x1) 33 3/8"x23 3/8"x1 15/16" (49.00x594x848)

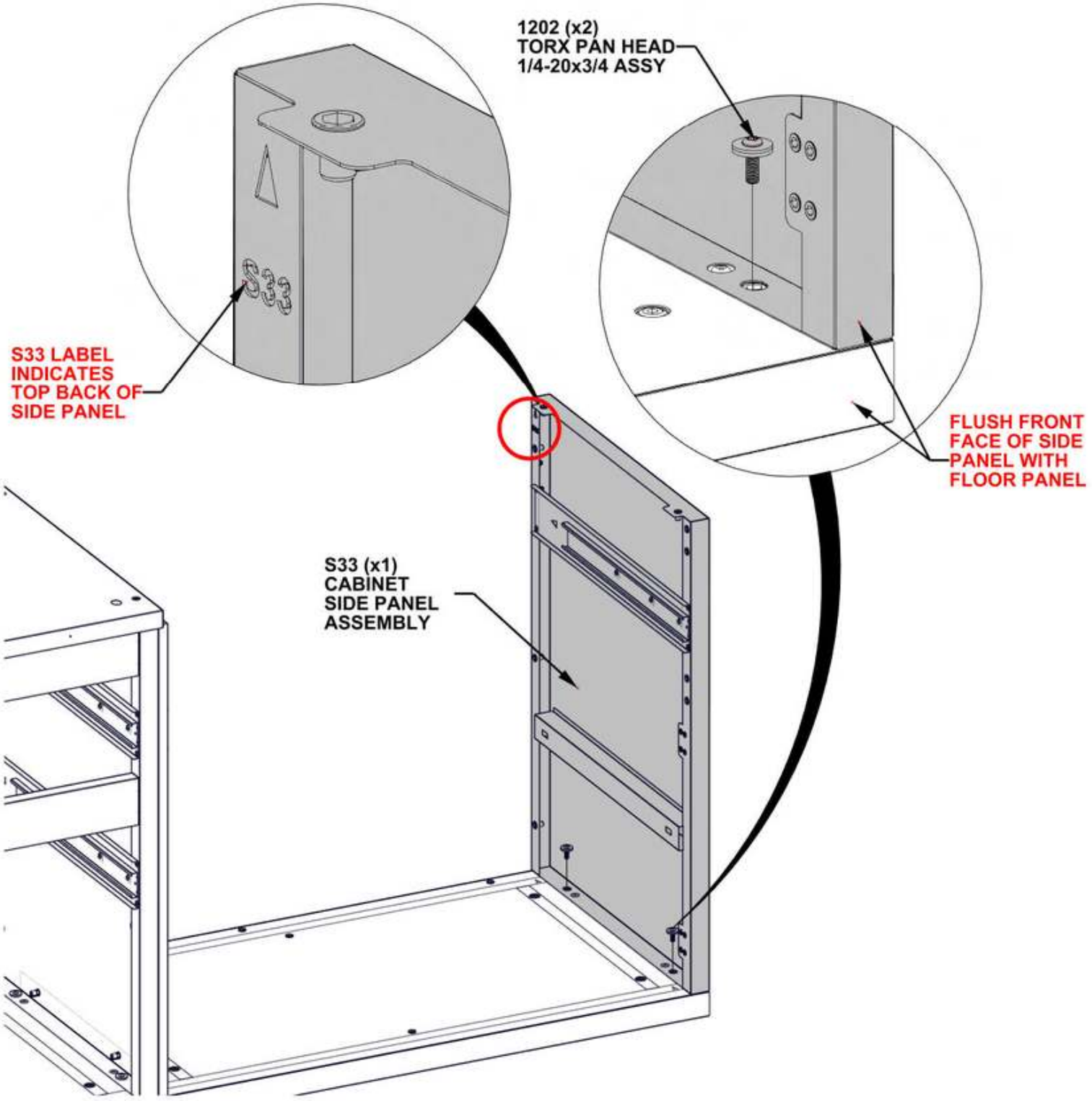

STEP 40 - RIGHT STORAGE CABINET ASSEMBLY

Qty	PartNo	Description
9	H101202	TORX PAN HEAD 1/4-20x3/4 ASSY



G16 CABINET BACK PANEL ASSEMBLY - A4M04839
(x1) 38 3/4"x33 3/8"x1 3/16" (30.00x847.20847.20x984.00)

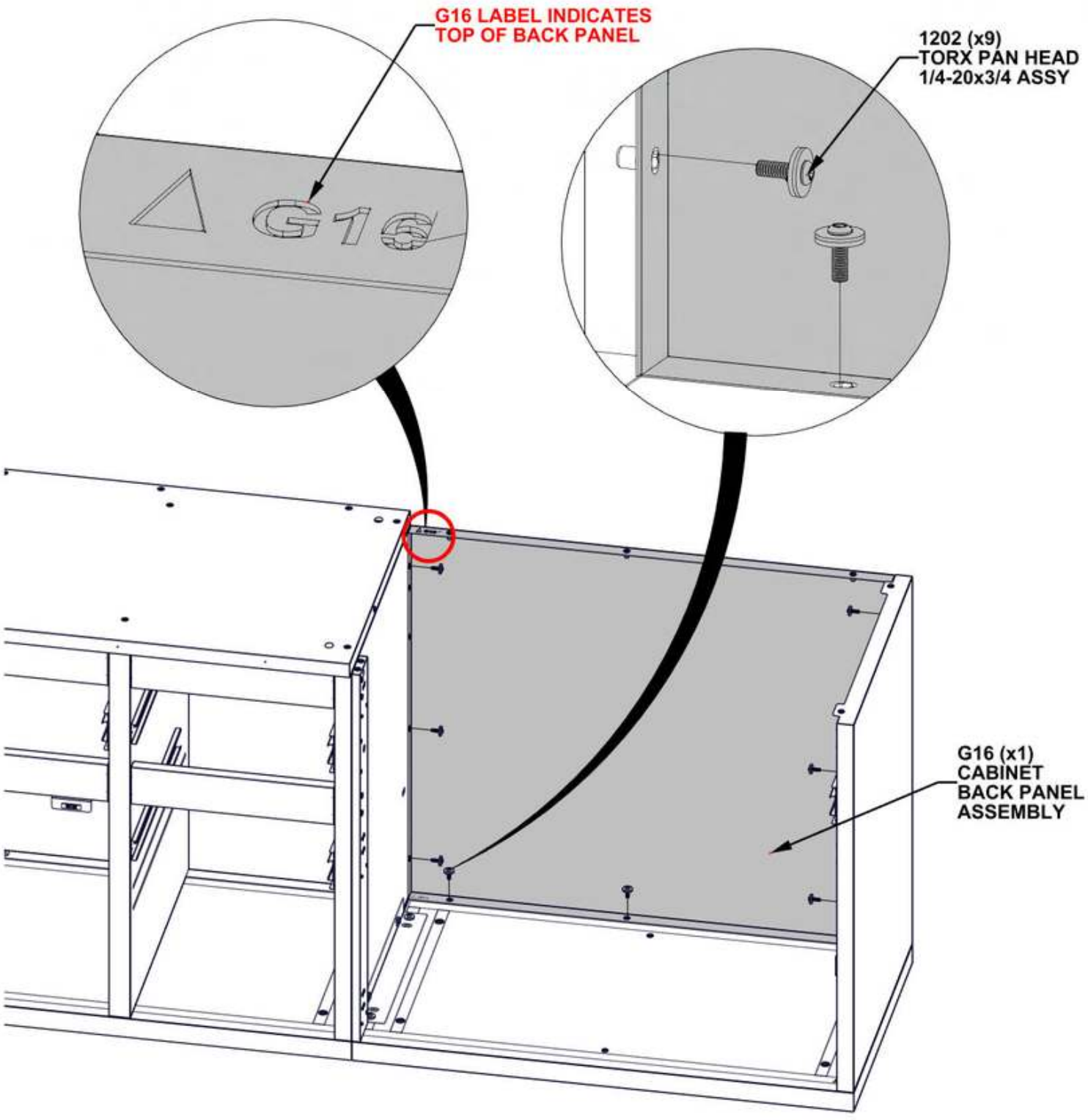

STEP 41A - RIGHT STORAGE CABINET ASSEMBLY

Qty	PartNo	Description
2	H101289	PAN HEAD SCREW 8-32x1/2" SS



H11 DRAWER FIXING PIECE ASSEMBLY - A4M03692
(x1) 5 3/8"x1 1/16"x11/16" (17.20x27.00x137.00)

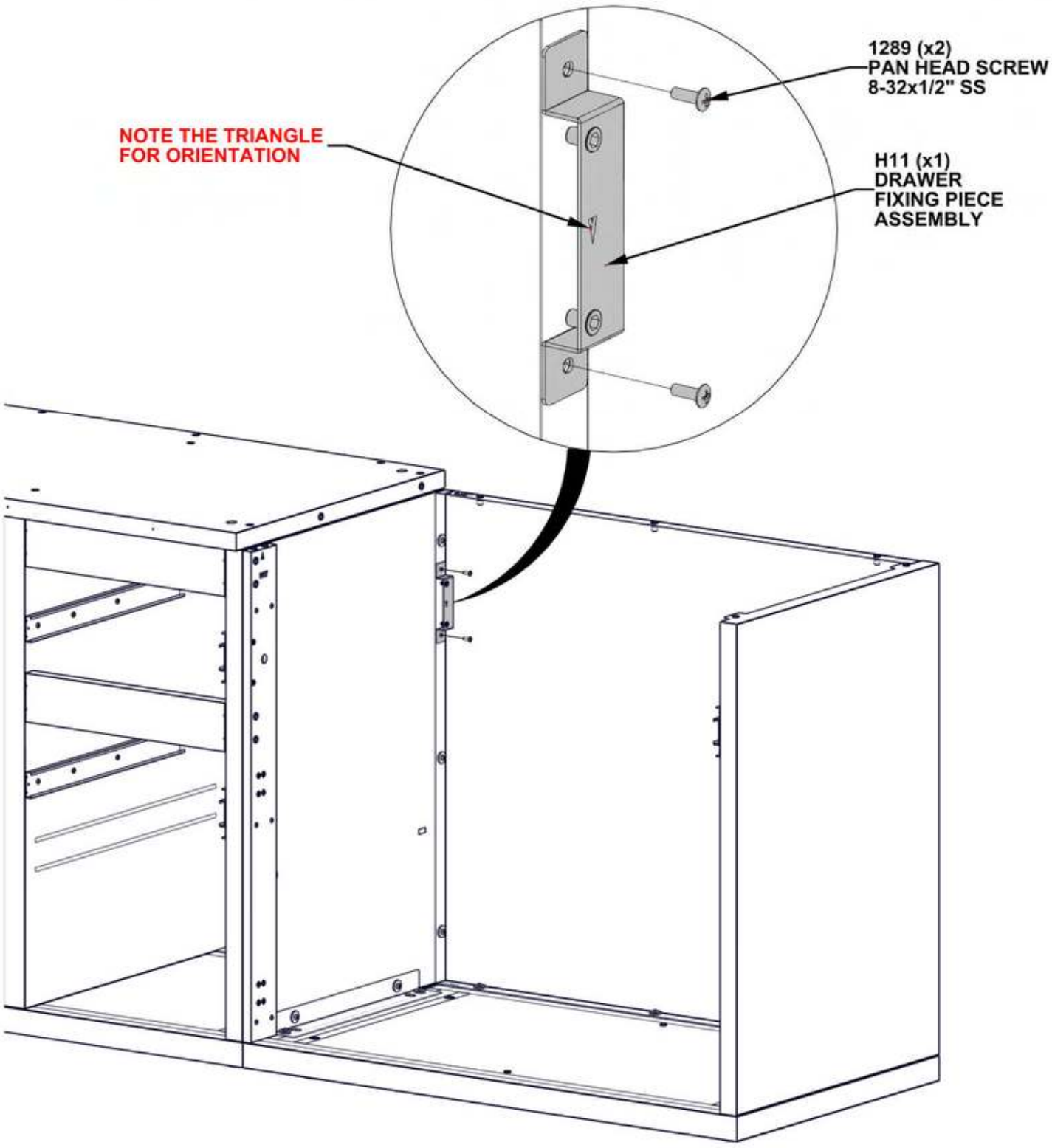

STEP 41B - RIGHT STORAGE CABINET ASSEMBLY

Qty	PartNo	Description
4	H101289	PAN HEAD SCREW 8-32x1/2" SS

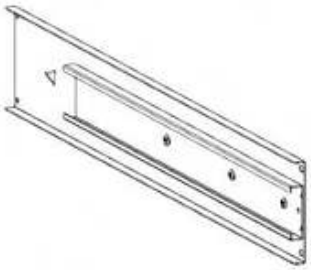

A10 SLIDE BRACKET ASSEMBLY - A4M03083
(x1) 15/16"x3 3/8"x22 5/8" (23x85x575)

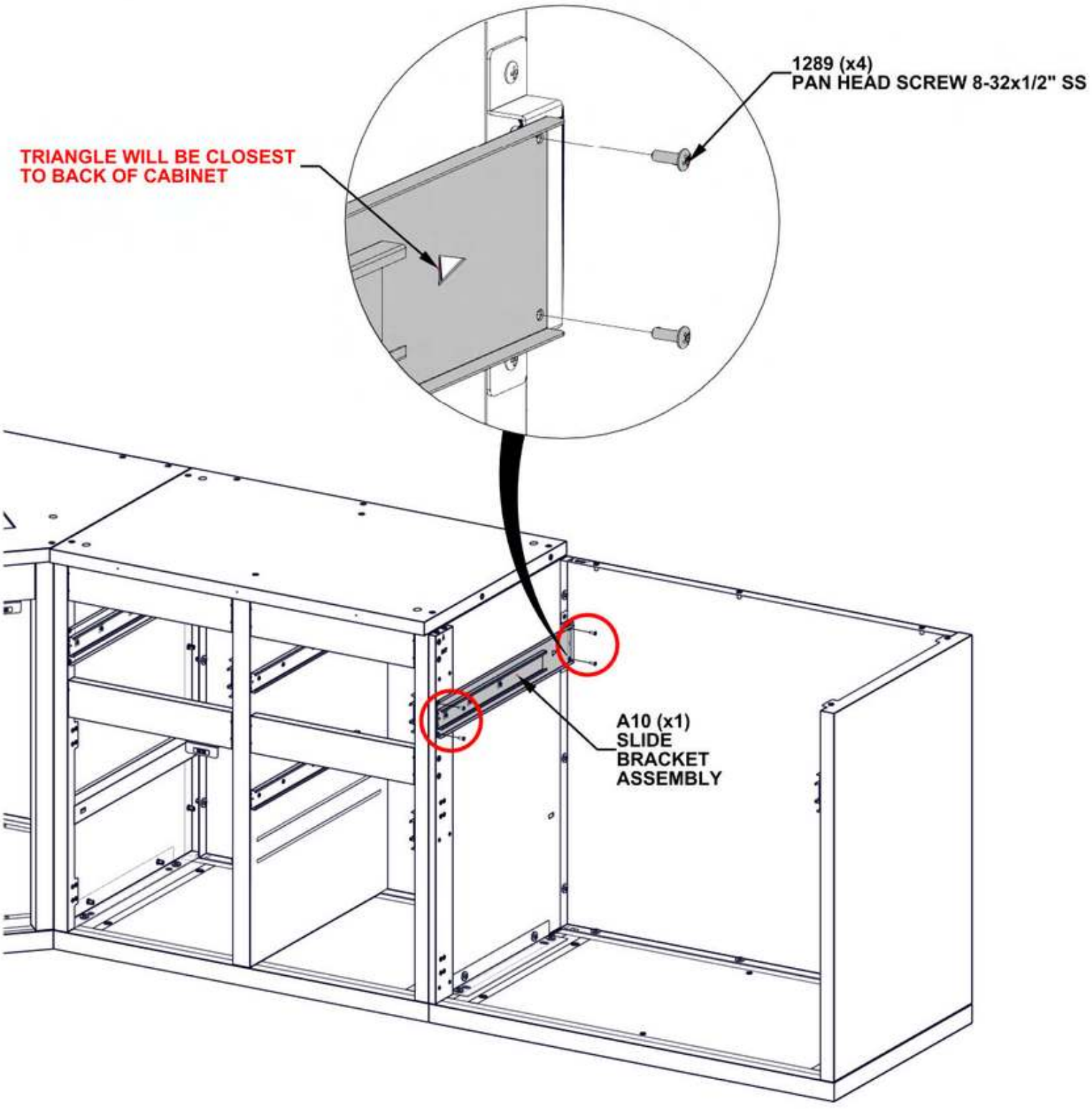

STEP 42 - RIGHT STORAGE CABINET ASSEMBLY

Qty	PartNo	Description
2	H101202	TORX PAN HEAD 1/4-20x3/4 ASSY



S17 CABINET SIDE PANEL ASSEMBLY M - A4M05647
(x1) 33 3/8"x23 3/8"x1 3/8" (35.00x593.20x847.20)

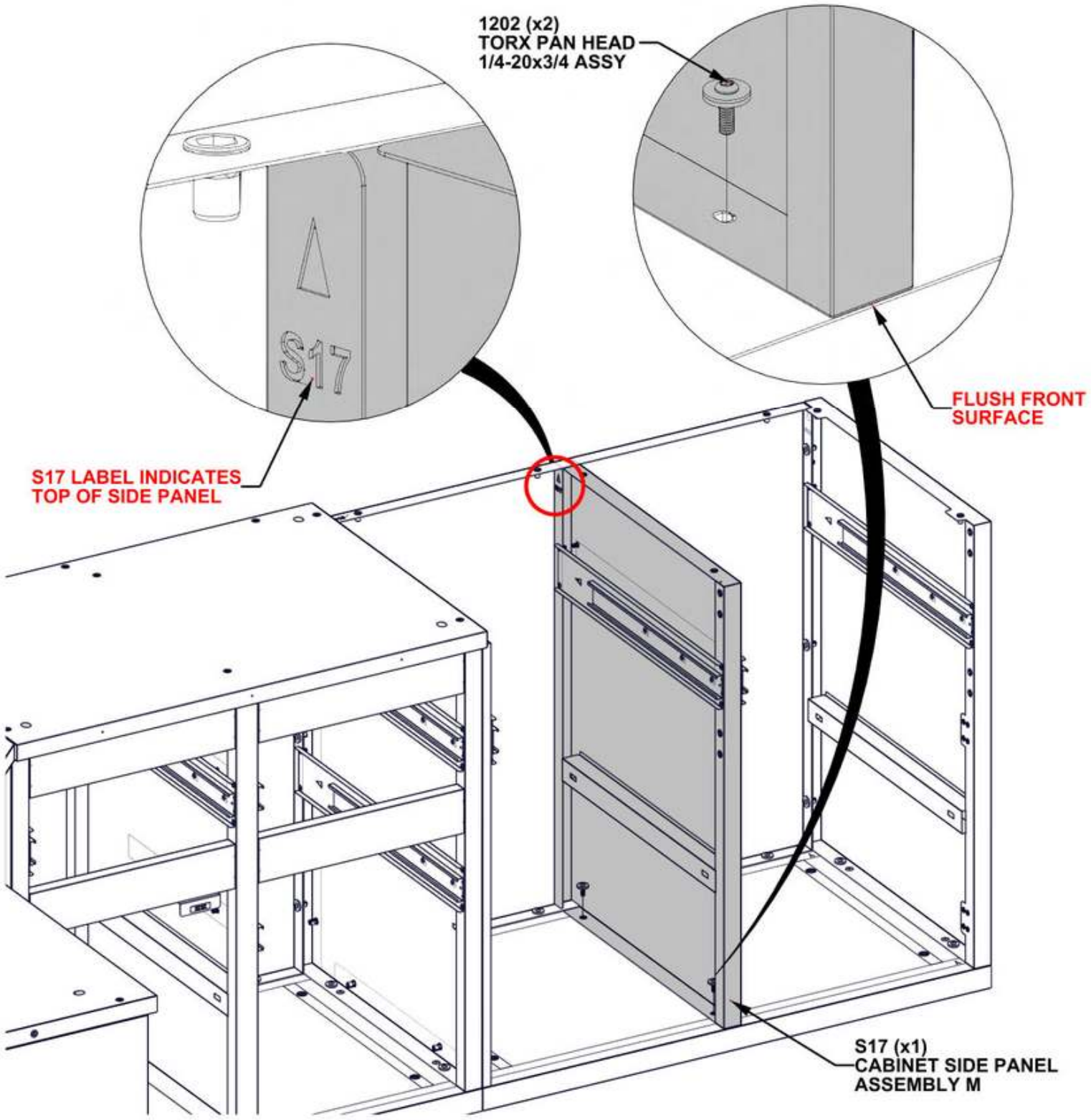

STEP 43 - RIGHT STORAGE CABINET ASSEMBLY

Qty	PartNo	Description
16	H101202	TORX PAN HEAD 1/4-20x3/4 ASSY

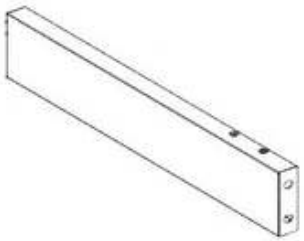

H12 HORIZONTAL BEAM ASSEMBLY - A4M03695
(x4) 18 1/4"x2 15/16"x1" (25.00x75.00x464.00)

- HARDWARE ATTACHES ON INSIDE OF CABINET

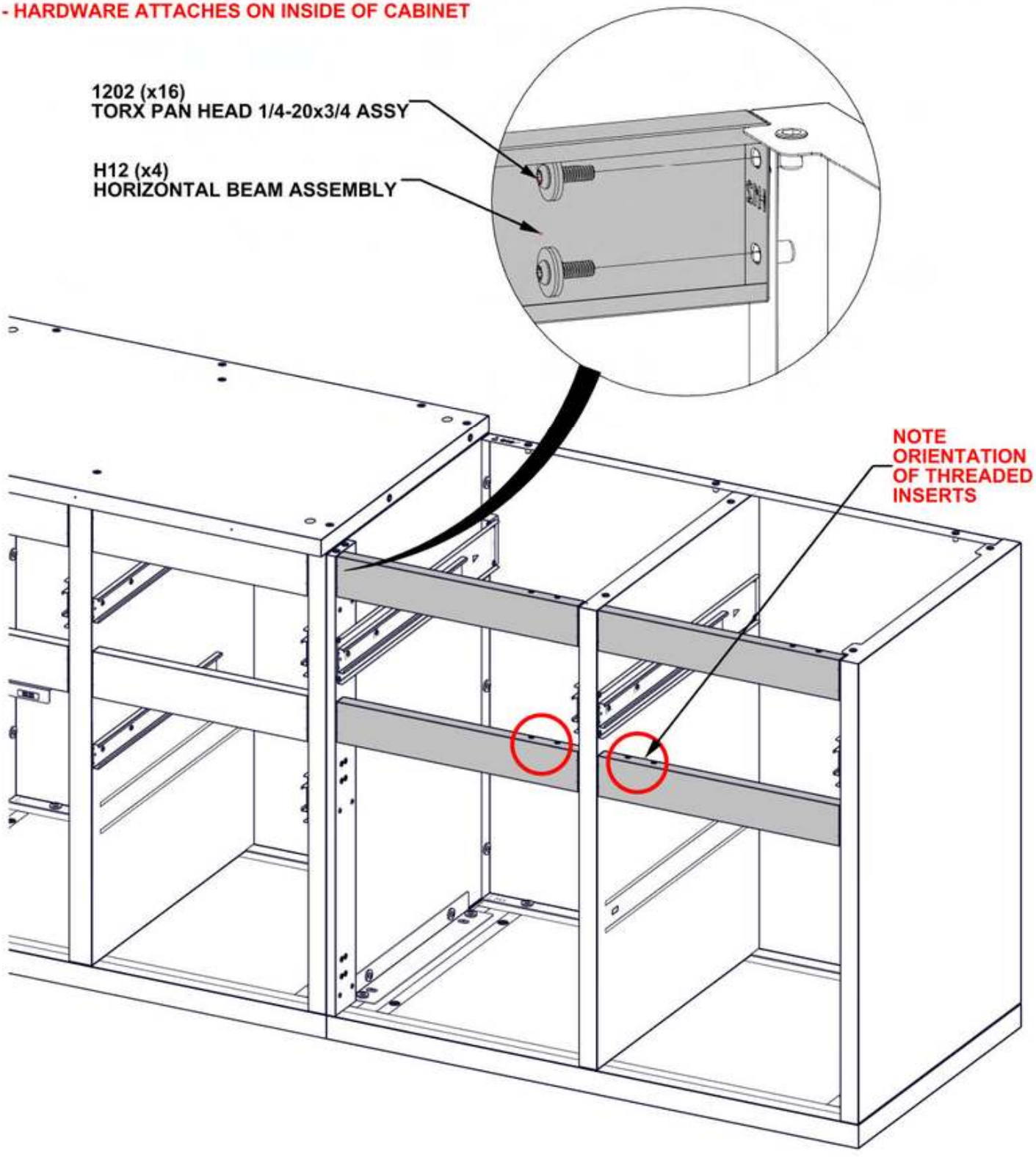

STEP 44 - RIGHT STORAGE CABINET ASSEMBLY

Qty	PartNo	Description
4	H101289	PAN HEAD SCREW 8-32x1/2" SS



A2 MAGNET BRACKET - A4M03026
(x2) 1"x1 1/4"x3 1/8" (25x31x80)

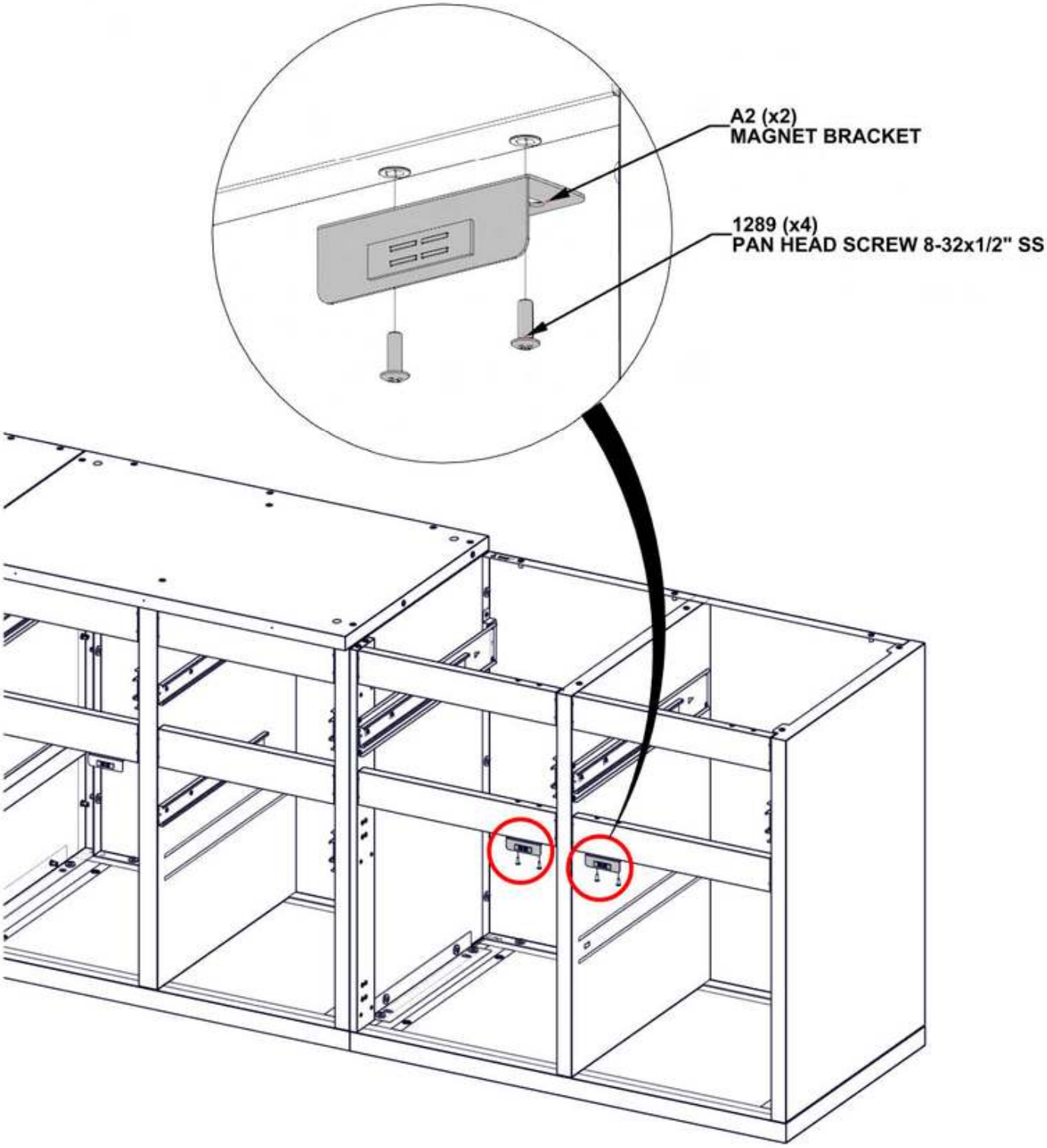

STEP 45 - RIGHT STORAGE CABINET ASSEMBLY

Qty	PartNo	Description
9	H101103	TORX SOCKET SCREW 1/4-20

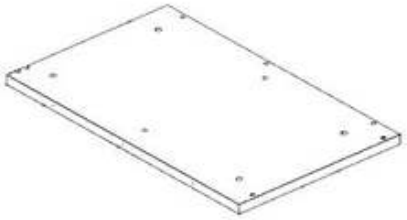

T17 CABINET TABLETOP PANEL ASSEMBLY - A4M04842
(x1) 39 7/16"x24 1/8"x1 1/4"1 1/4" (32.00x612.00x1001.00)

- FLUSH BACK AND SIDES OF PANEL ASSEMBLY.
- SQUARE ALL SIDES OF CABINET BEFORE TIGHTENING HARDWARE.

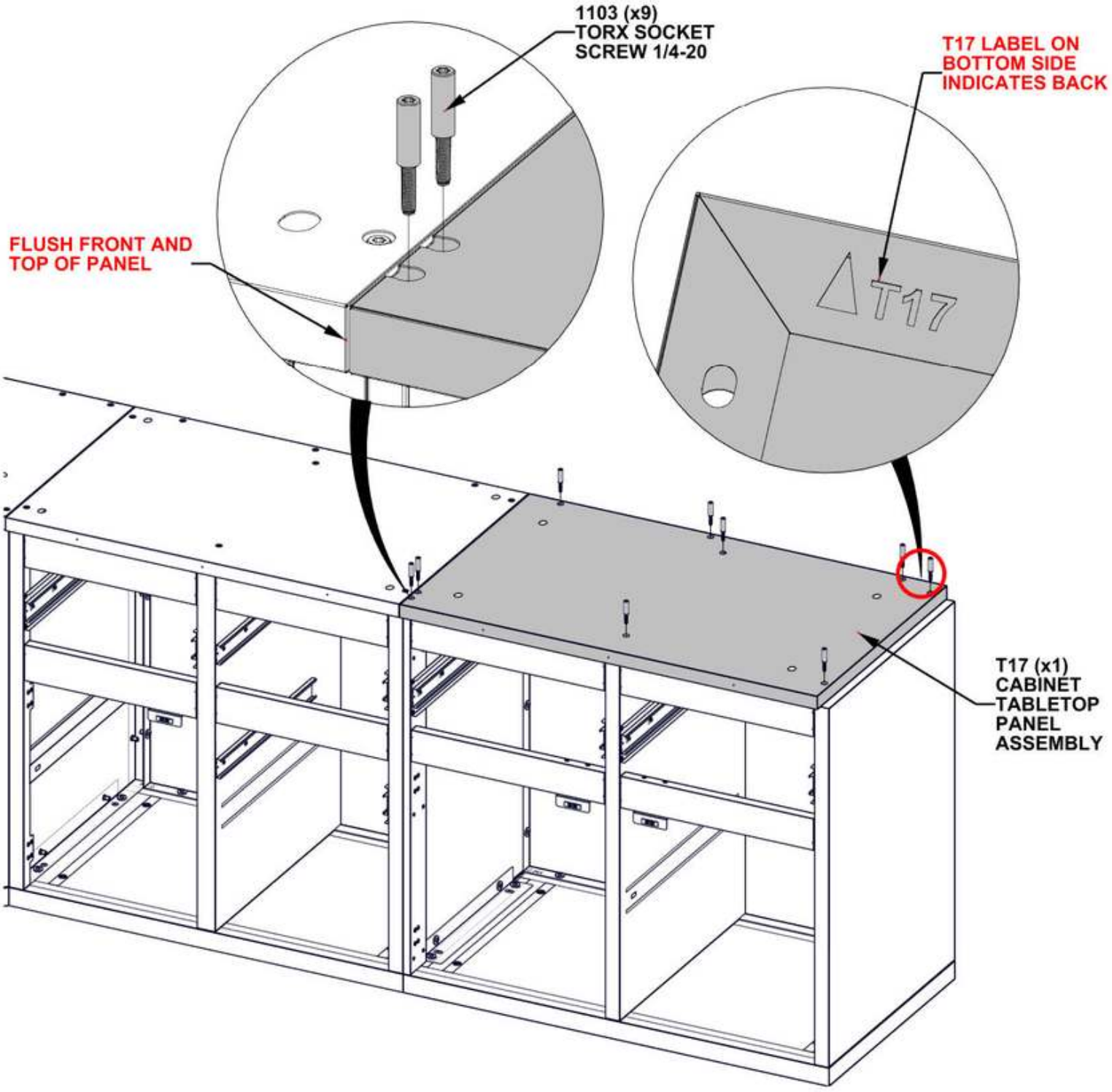

STEP 46A - SINK INSTALLATION

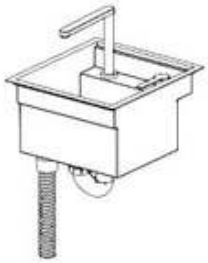

A16 SINK ASSEMBLY - A4M03143
(x1) 15 1/8"x15 5/16"x16 7/8" (384x389x429)

1. INSTALLING THE SINK DRAIN

- SET DRAIN INSIDE OF SINK BODY, PLACING FOAM GASKET BETWEEN SURFACES.
- FASTEN IN PLACE USING RUBBER GASET AND DRAIN NUT FROM BOTTOM SIDE.

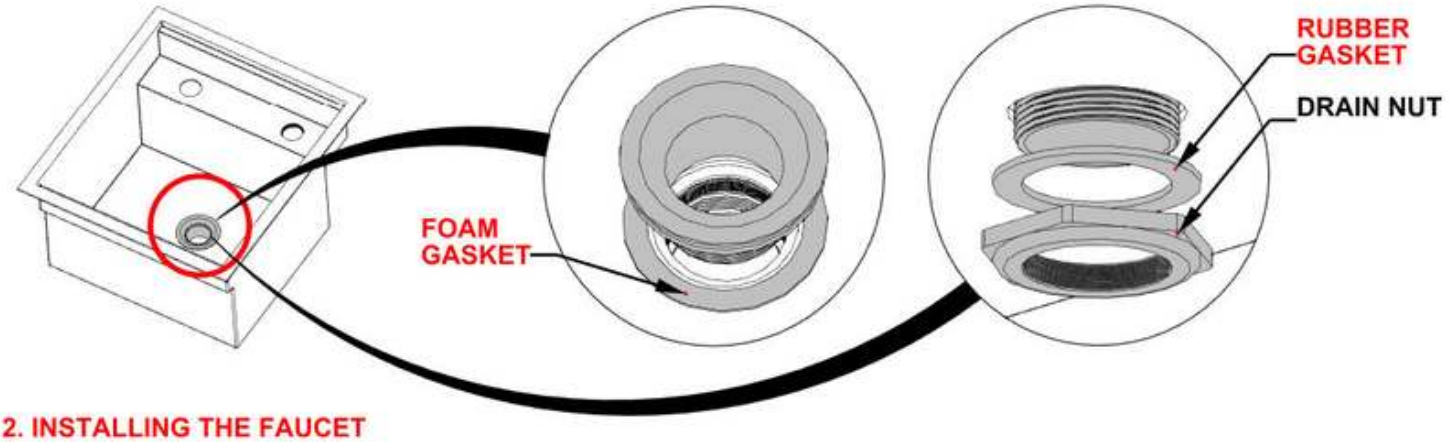

2. INSTALLING THE FAUCET

- INSTALL FAUCET BY PLACING HANDLE AND SPOUT INTO SINK OPENINGS AND SECURING IN PLACE VIA NUT.
- INSERT SCREWS TO LOCK.
- CONNECT WATER FAUCET LINES TOGETHER.

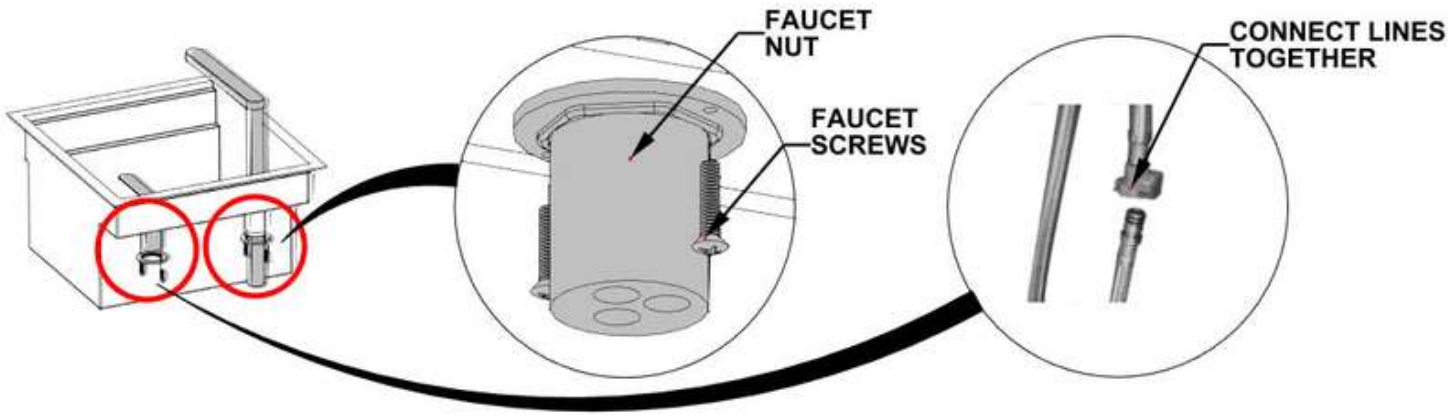

3. INSTALLING THE DRAIN FITTING

- ATTACH DRAIN FITTING TO SINK DRAIN.

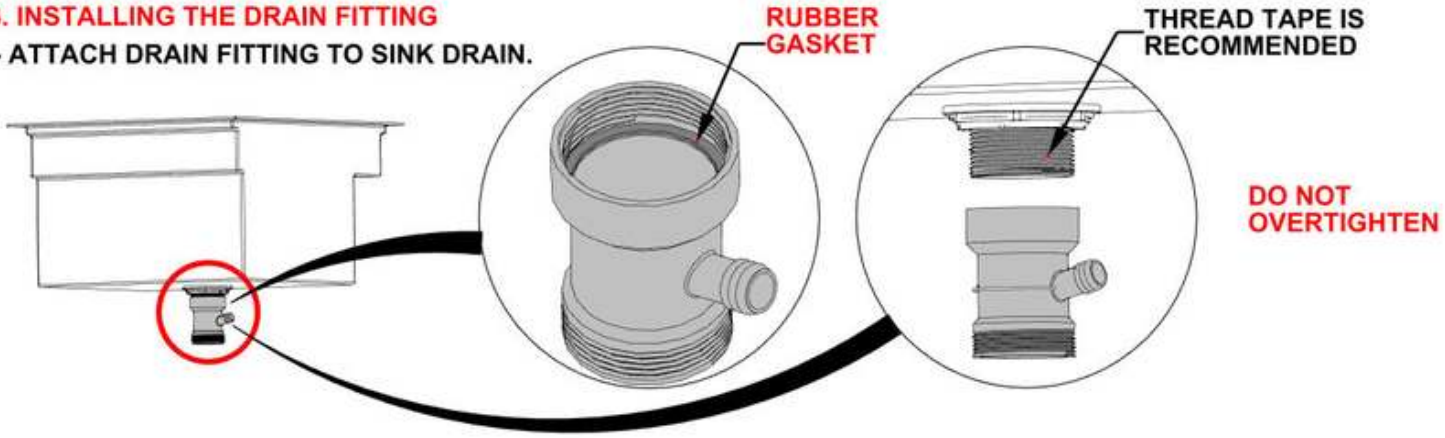

STEP 46B - SINK INSTALLATION

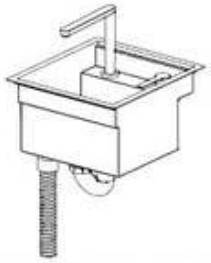

A16 SINK ASSEMBLY - A4M03143
(x1) 15 1/8"x15 5/16"x16 7/8" (384x389x429)

4. INSTALLING THE OVERFLOW DRAIN

- MAKE SURE RUBBER GASKET IS INSTALLED IN OVERFLOW DRAIN.
- INSERT DRAIN SCREW TO HOLD IN PLACE.

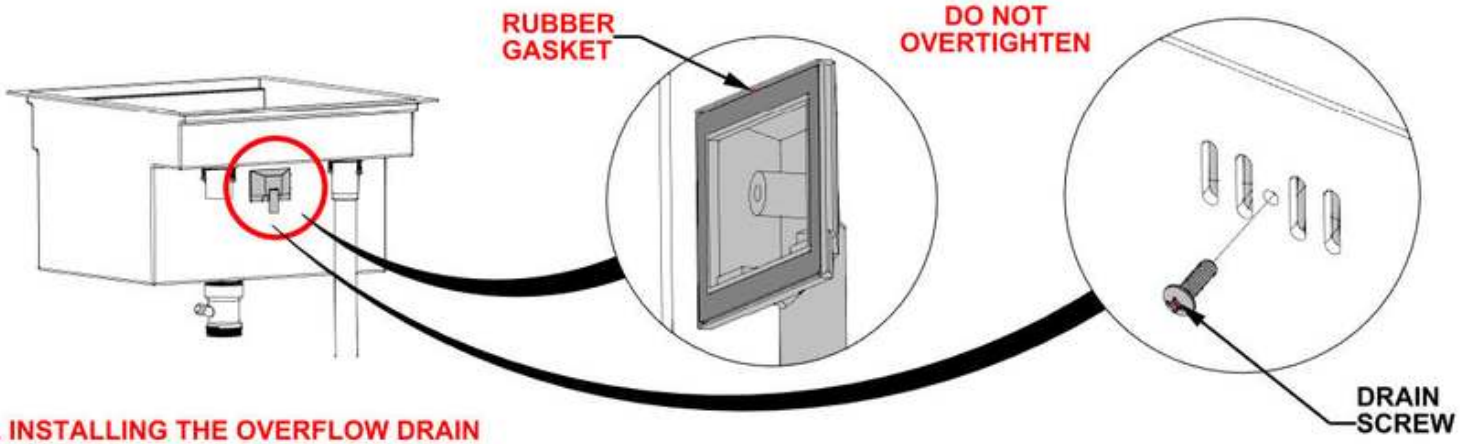

5. INSTALLING THE OVERFLOW DRAIN

- ATTACH OVERFLOW DRAIN BY CONNECTING EACH END AS SHOWN.

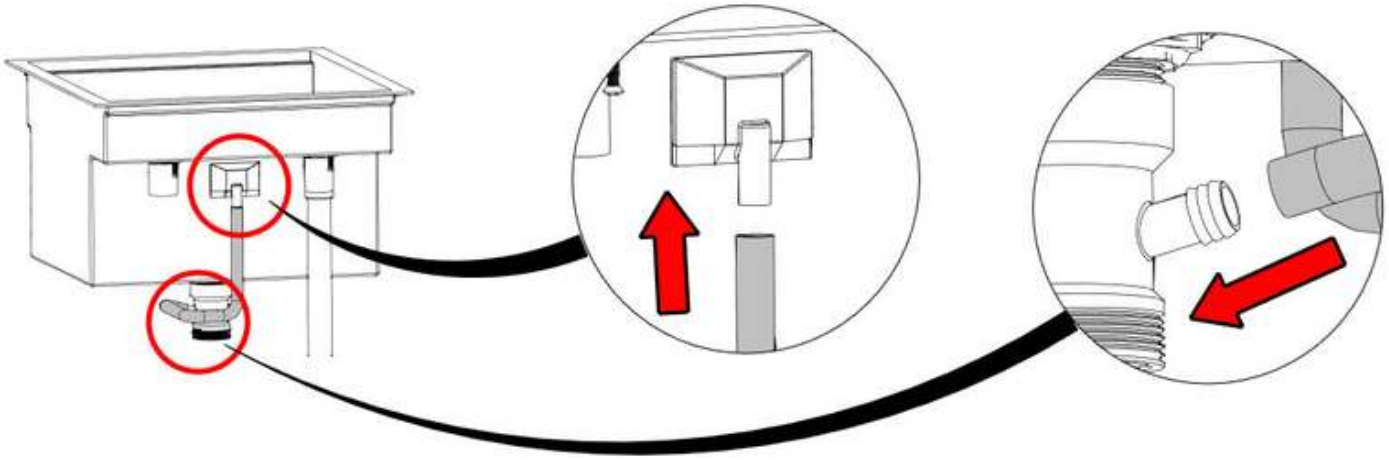

6. INSTALLING THE MAIN DRAIN AND TRAP

- ATTACH TRAP AND CORRUGATED DRAIN HOSE TO DRAIN FITTING.

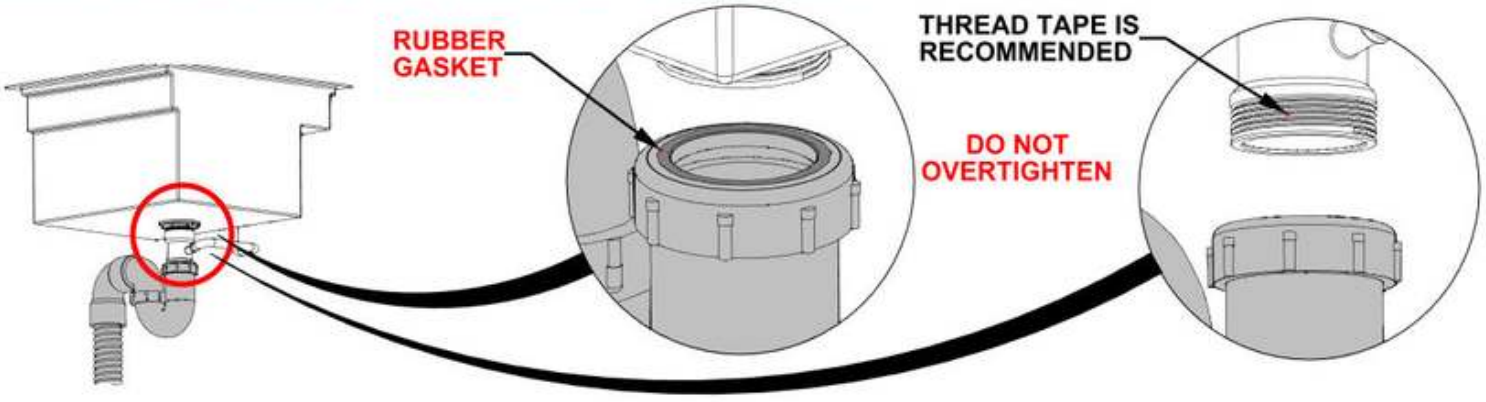

STEP 46C - SINK INSTALLATION

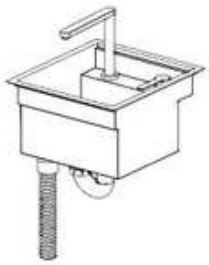

A16 (x1) SINK ASSEMBLY - A4M03143
15 1/8"x15 5/16"x16 7/8" (384x389x429)



A4M03151 (x1) GARDEN HOSE ADAPTER

- SINK IS DESIGNED TO FIT SNUG. GENTLY PRESS THE SIDES OF THE SINK IN AS YOU LOWER SINK BODY INTO PANEL.
- DRAIN STRAINER MUST BE USED WHEN DISCARDING FOOD INSIDE OF SINK.
- DO NOT LET SOLID MATERIAL ENTER SINK BASIN.

OPTIONS FOR WATER INLET SUPPLY HOOKUP:

- GARDEN HOSE ATTACHMENT USING PROVIDED ADAPTER
- WATER INLET SUPPLY LINE

OPTIONS FOR DRAIN DISCHARGE:

- BUCKET OR GREY WATER CONTAINER
- FRENCH DRAIN OR DRY BASIN
- INTEGRATED SEWER SYSTEM
- CHECK YOUR LOCAL REQUIRMENTS.

ATTACH ADAPTER TO INLET LINE AND TIGHTEN WITH WRENCH

3151 (x1) GARDEN HOSE ADAPTER

IT IS RECOMMENDED TO APPLY A FINE BEAD OF SILICONE, TO UNDERNEATH SIDE OF ALL SINK FLANGES BEFORE INSTALLING

A16 (x1) SINK ASSEMBLY

PRESS THE SIDES OF THE SINK IN AS YOU LOWER SINK BODY INTO PANEL

STEP 47A - BAR TABLE INSTALLATION

Qty	PartNo	Description
12	H101202	TORX PAN HEAD 1/4-20x3/4 ASSY

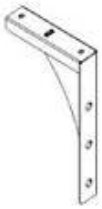

A19 TRIANGLE BRACKET L - A4M04727
(x2) 14 11/16"x7 7/8"x1 15/16" (50x200.00x373.1)



A20 TRIANGLE BRACKET R - A4M04722
(x2) 14 11/16"x7 7/8"x1 15/16" (50x200x373.1)

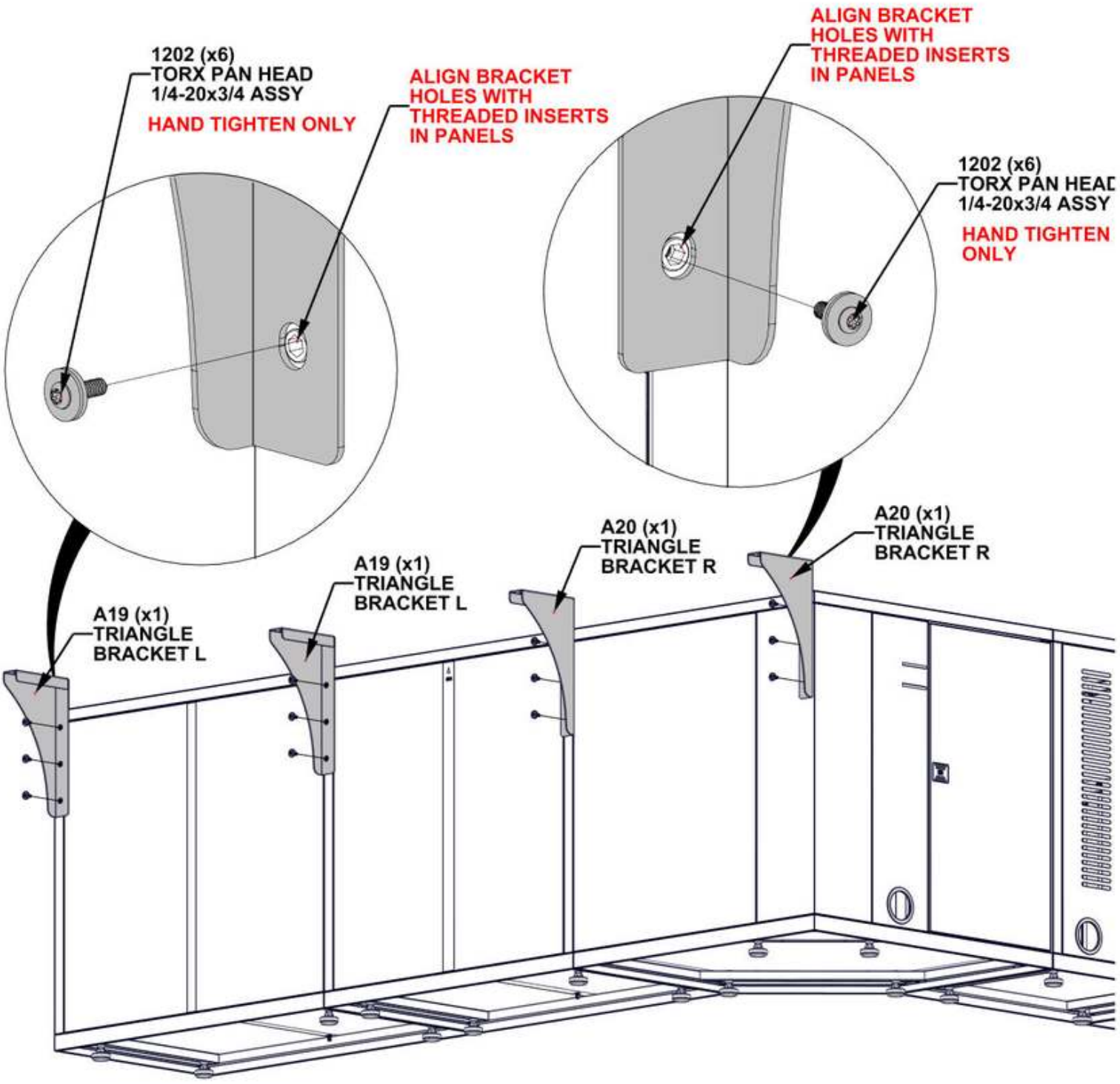

STEP 47B - BAR TABLE INSTALLATION

Qty	PartNo	Description
8	H101202	TORX PAN HEAD 1/4-20x3/4 ASSY

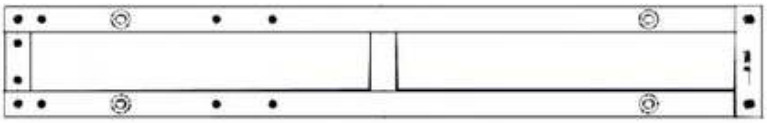

A17 SUPPORT FRAME ASEEMBLY - A4M04723
(x2) 54 1/2"x8 1/4"x1" (25x210x1384.8)

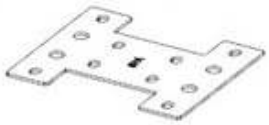

A18 SUPPORT FRAME CONNECTING PIECE - A4M04724
(x1) 1/8"x7 1/16"x8 1/4" (3x180x210)

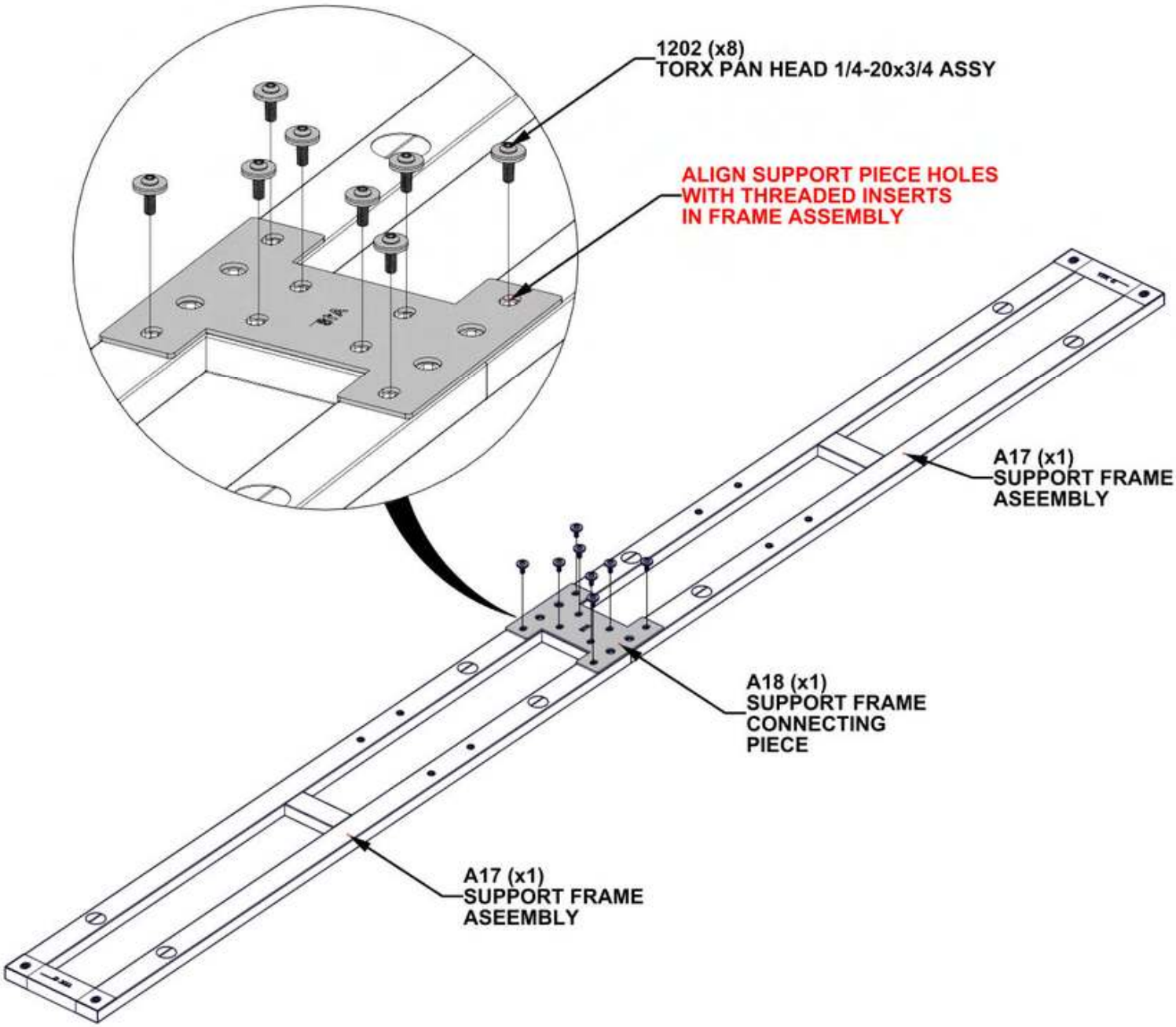

STEP 47C - BAR TABLE INSTALLATION

Qty	PartNo	Description
8	H101202	TORX PAN HEAD 1/4-20x3/4 ASSY

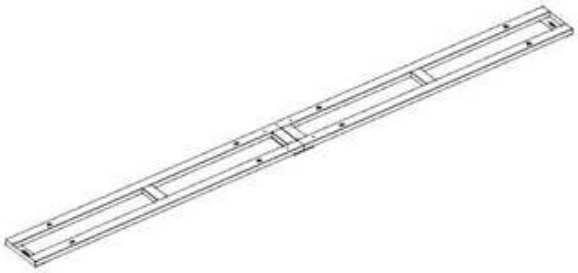

BAR TABLE INSTALLATION FROM STEP 47B

- LEVEL BAR TABLE AS NEEDED BEFORE TIGHTENING HARDWARE.
- TIGHTEN ALL HARDWARE FROM STEP 47A.

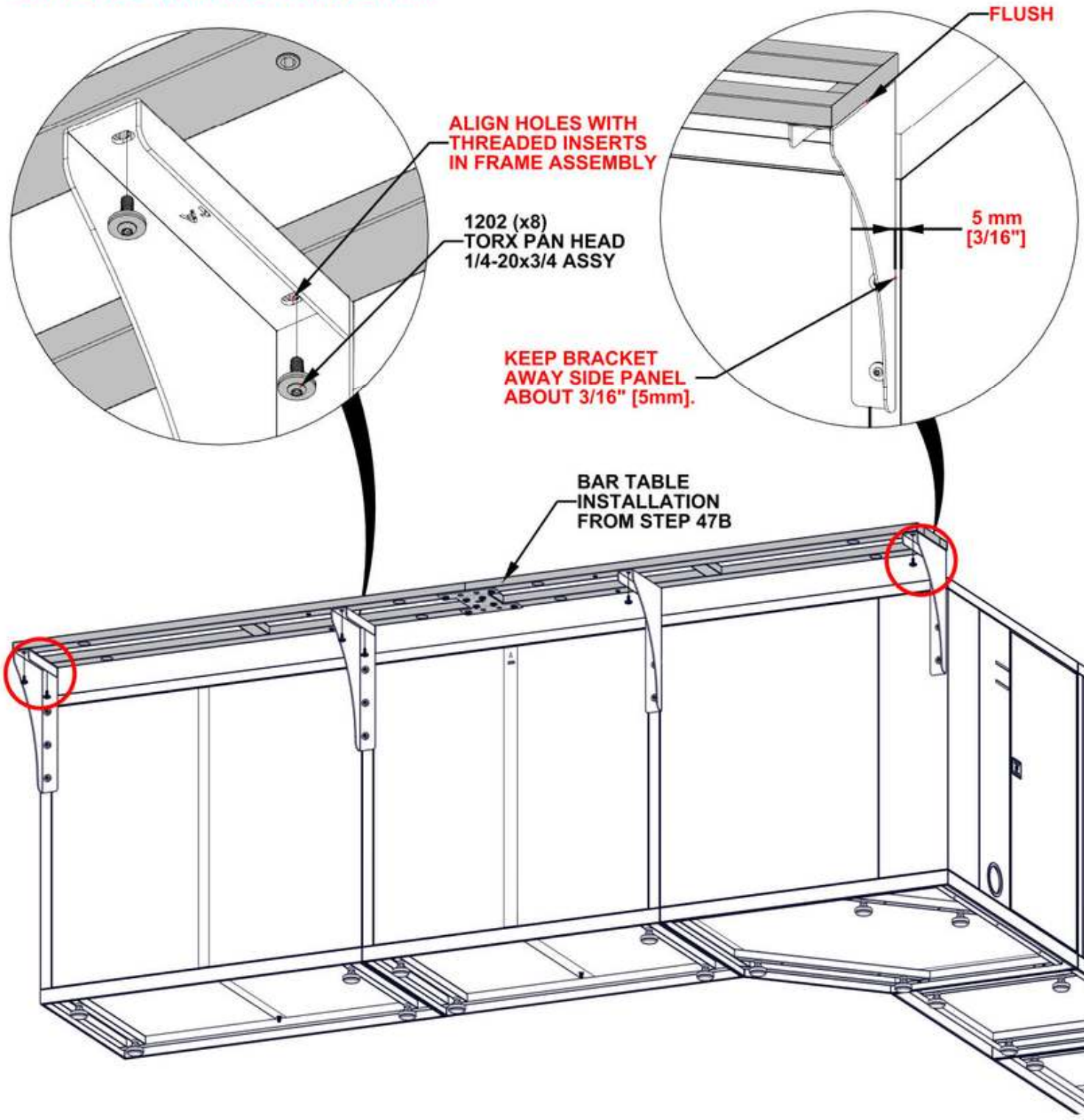

STEP 48A - BAR TABLE COUNTERTOP INSTALLATION



M15 COUNTERTOP - A4M05958
(x1) 56 11/16"x13 3/4"x11/16" (18x350x1440)



M22 COUNTERTOP - A4M05956
(x1) 56 11/16"x13 3/4"x11/16" (18x350x1440)

- IT IS RECOMMENDED TO HAVE AT LEAST TWO PEOPLE SET COUNTERTOP IN PLACE.
- SLIDE IN PLACE UNTIL HOLES IN COUNTERTOP ALIGN WITH THE HOLES IN SUPPORT FRAME.
- WHEN SETTING COUNTERTOP IN PLACE, MAKE SURE YOUR FINGERS ARE CLEAR AND NOT UNDERNEATH COUNTERTOP.

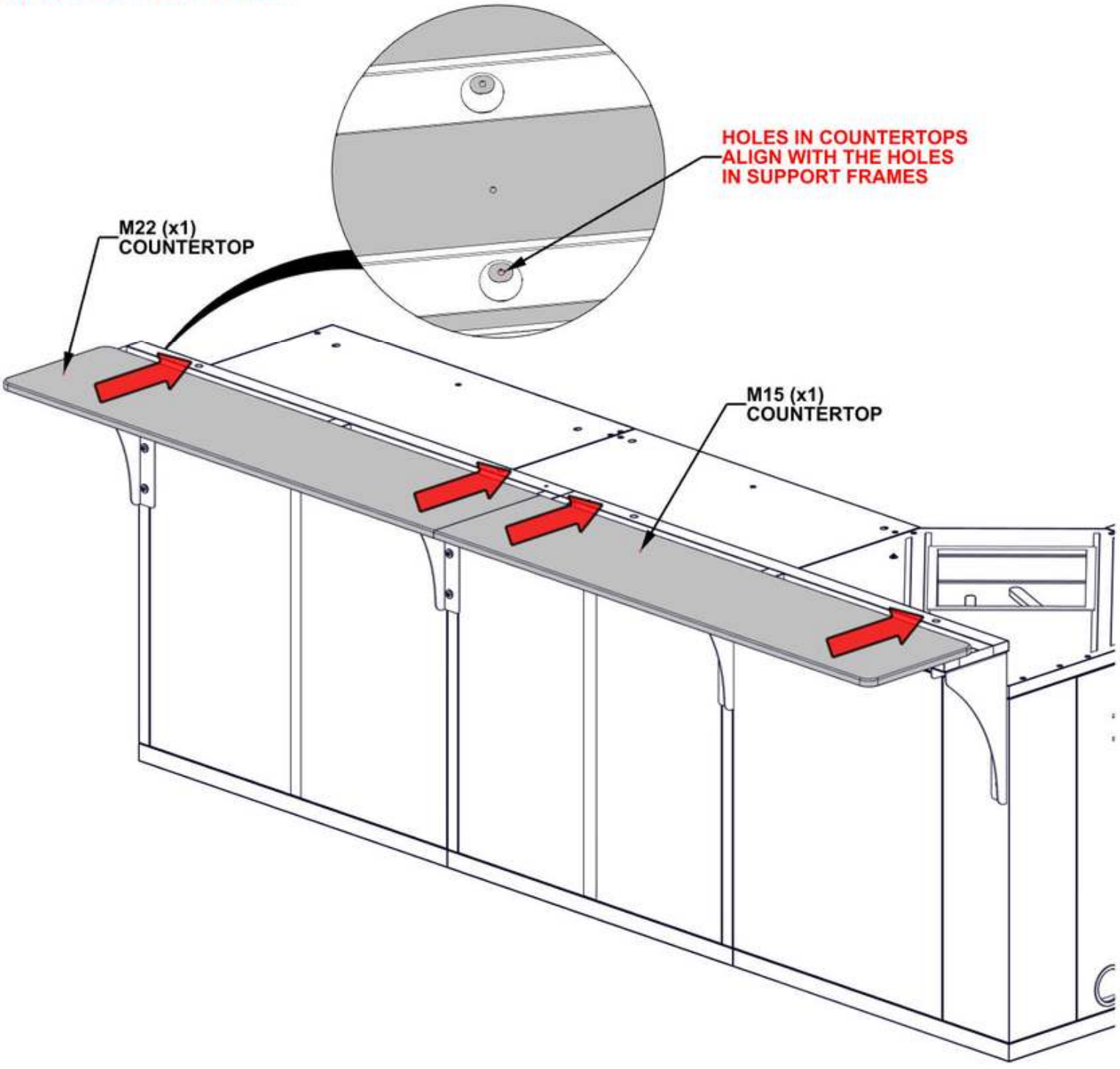

STEP 48B - BAR TABLE COUNTERTOP ADJUSTMENT (AS NEEDED)

Qty	PartNo	Description
4	H101404	TORX SOCKET SCREW 5/16-18x1 1/16"

- LEVEL COUNTERTOP AS NEEDED BEFORE INSERTING HARDWARE.
- USE TORX SOCKET SCREWS TO FINE TUNE ADJUST THE COUNTERTOP SEAM UNTIL TOP SURFACES ARE FLUSH.

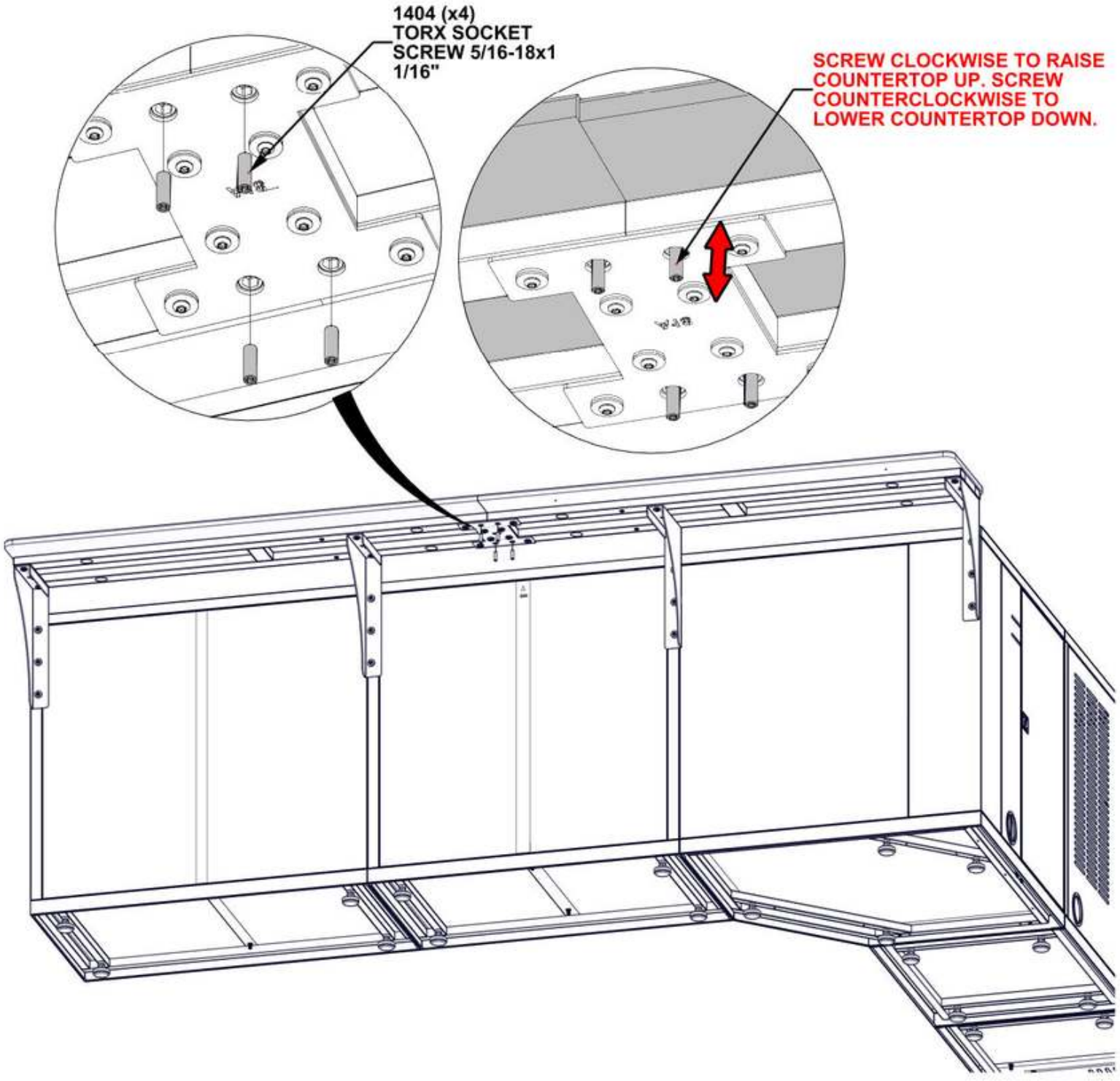

STEP 48C - BAR TABLE COUNTERTOP INSTALLATION

Qty	PartNo	Description
8	H101292	TORX PAN HEAD 1/4-20x13/32"
8	H101053	STEEL WASHER 6x20
8	H101054	SEALANT WASHER

- MAKE SURE YOU ARE USING THE CORRECT HARDWARE FOR THIS STEP.
- ONCE COUNTERTOP IS IN PLACE, IT IS RECOMMENDED TO COVER WITH A PIECE OF CARDBOARD OR FOAM UNTIL ASSEMBLY IS FINISHED TO PREVENT DAMAGE.
- DO NOT USE COUNTERTOP SURFACE AS A WORK BENCH.

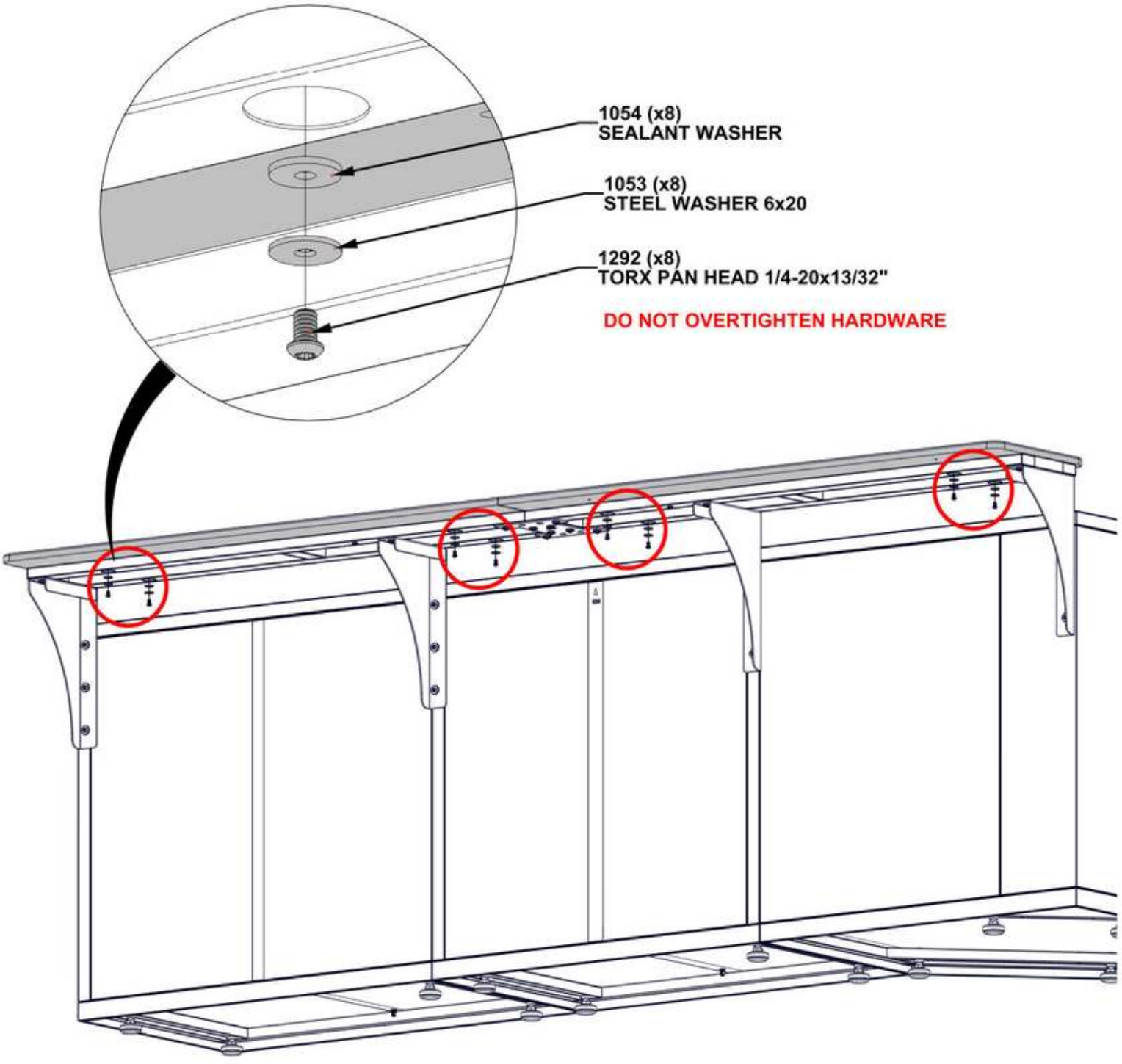

STEP 49A - CABINET COUNTERTOP INSTALLATION

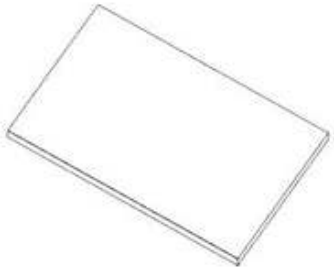

M18 COUNTERTOP - A4M05960
(x1) 40 3/16"x24 15/16"x1 15/16" (50x634x1020)

- IT IS RECOMMENDED TO HAVE AT LEAST TWO PEOPLE SET COUNTERTOP IN PLACE.
- SLIDE IN PLACE UNTIL HOLES IN COUNTERTOP ALIGN WITH THE HOLES IN SUPPORT FRAME.
- WHEN SETTING COUNTERTOP IN PLACE, MAKE SURE YOUR FINGERS ARE CLEAR AND NOT UNDERNEATH COUNTERTOP.

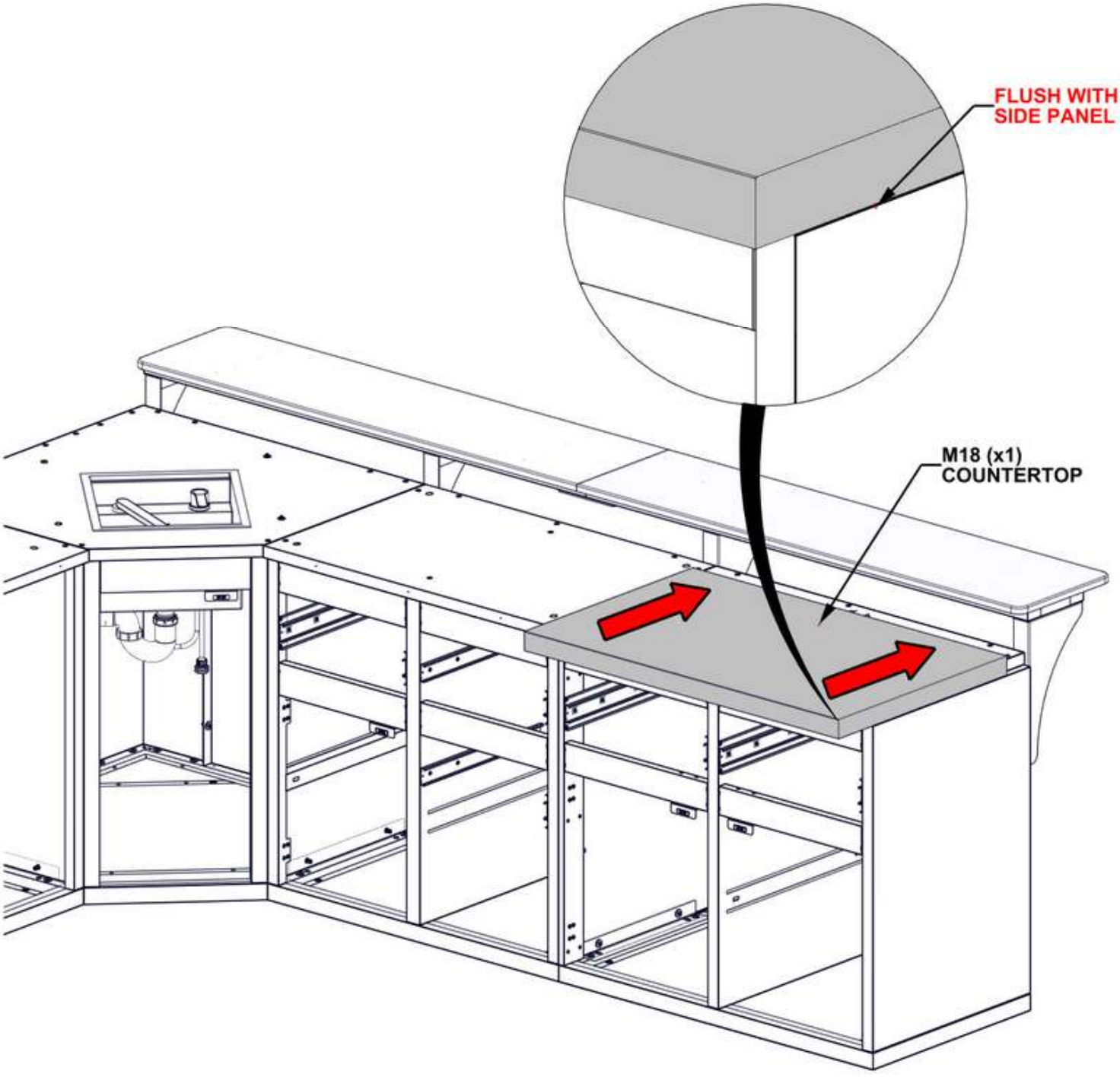

STEP 49B - CABINET COUNTERTOP INSTALLATION

Qty	PartNo	Description
4	H101292	TORX PAN HEAD 1/4-20x13/32"
4	H101053	STEEL WASHER 6x20
4	H101054	SEALANT WASHER

- MAKE SURE YOU ARE USING THE CORRECT HARDWARE FOR THIS STEP.
- ONCE COUNTERTOP IS IN PLACE, IT IS RECOMMENDED TO COVER WITH A PIECE OF CARDBOARD OR FOAM UNTIL ASSEMBLY IS FINISHED TO PREVENT DAMAGE.
- DO NOT USE COUNTERTOP SURFACE AS A WORK BENCH.

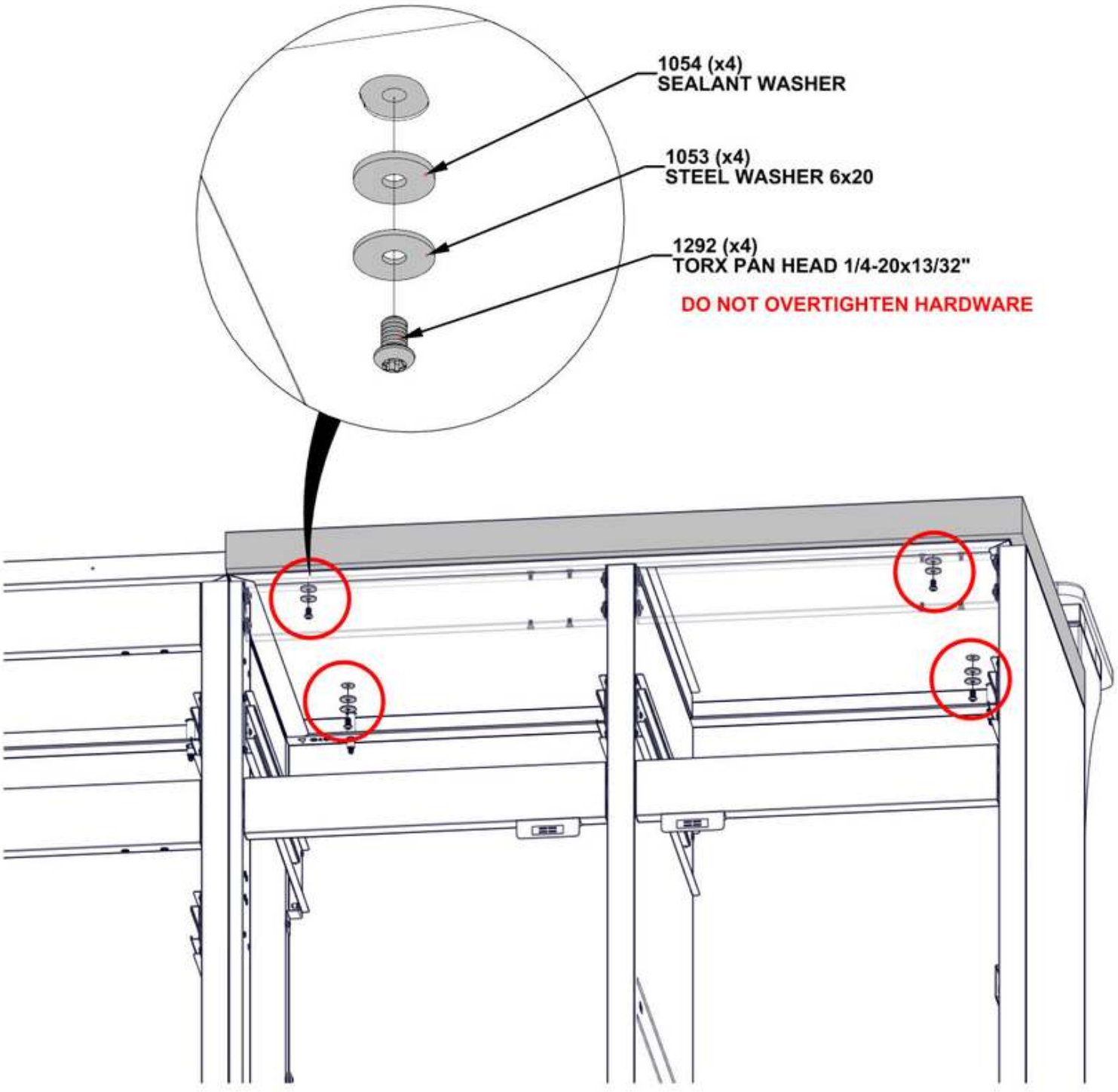

STEP 50A - CABINET COUNTERTOP INSTALLATION

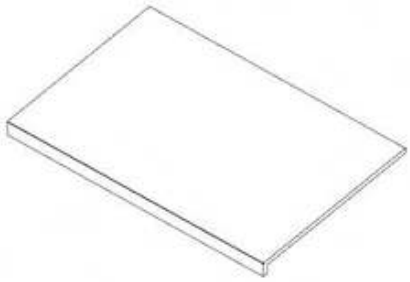

M12 COUNTERTOP - A4M05955
(x1) 37 3/16"x24 15/16"x1 15/16" (50x634x944)

- IT IS RECOMMENDED TO HAVE AT LEAST TWO PEOPLE SET COUNTERTOP IN PLACE.
- SLIDE IN PLACE UNTIL HOLES IN COUNTERTOP ALIGN WITH THE HOLES IN SUPPORT FRAME.
- WHEN SETTING COUNTERTOP IN PLACE, MAKE SURE YOUR FINGERS ARE CLEAR AND NOT UNDERNEATH COUNTERTOP.

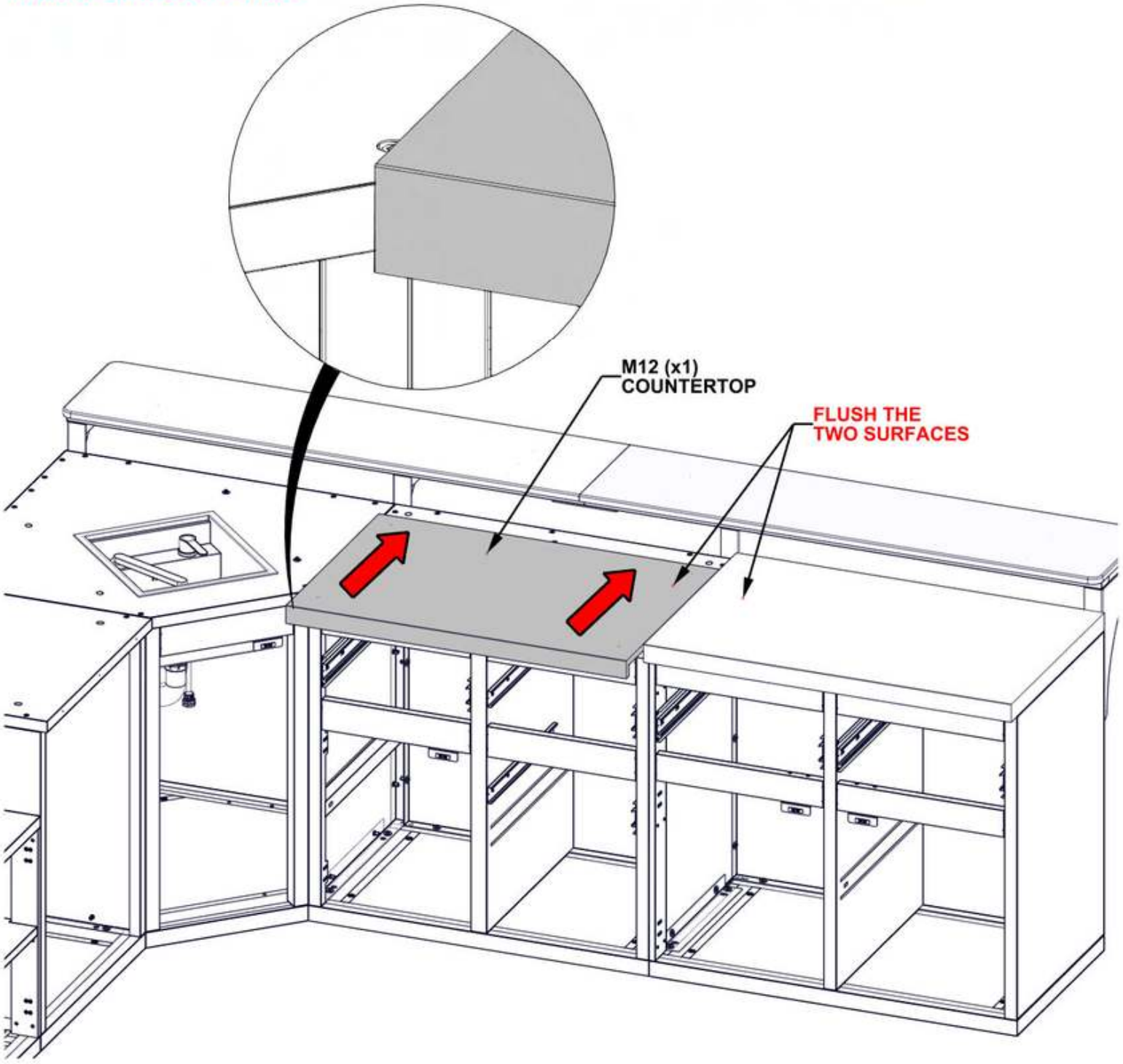

STEP 50B - CABINET COUNTERTOP INSTALLATION

Qty	PartNo	Description
4	H101292	TORX PAN HEAD 1/4-20x13/32"
4	H101053	STEEL WASHER 6x20
4	H101054	SEALANT WASHER

- MAKE SURE YOU ARE USING THE CORRECT HARDWARE FOR THIS STEP.
- ONCE COUNTERTOP IS IN PLACE, IT IS RECOMMENDED TO COVER WITH A PIECE OF CARDBOARD OR FOAM UNTIL ASSEMBLY IS FINISHED TO PREVENT DAMAGE.
- DO NOT USE COUNTERTOP SURFACE AS A WORK BENCH.

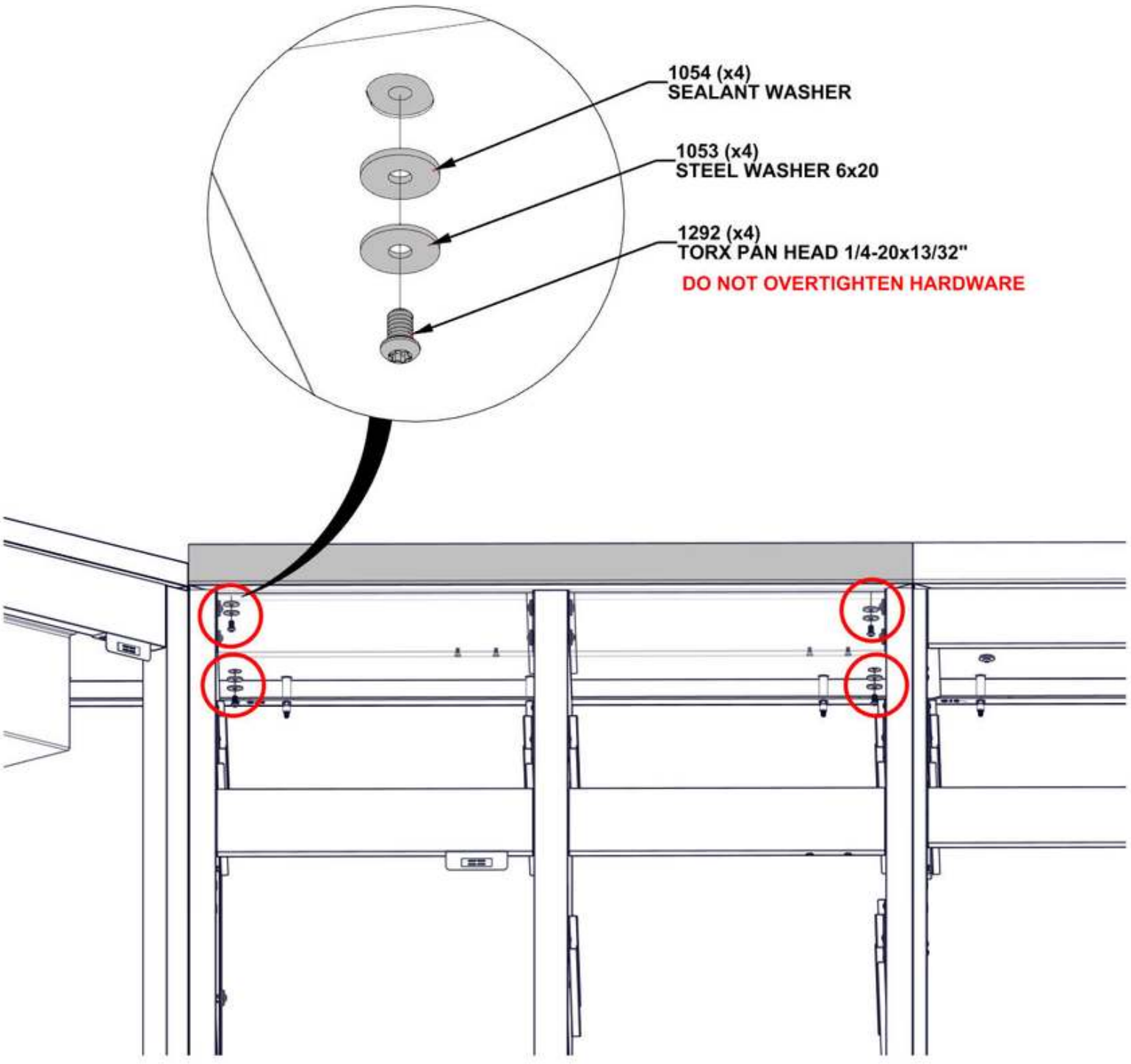

STEP 51A - SINK CABINET COUNTERTOP INSTALLATION

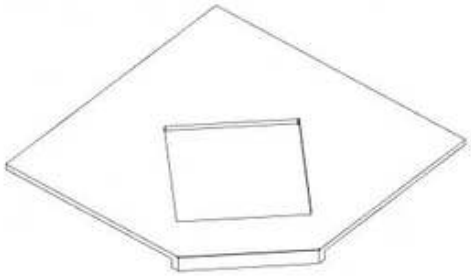

M14 COUNTERTOP - A4M05954
(x1) 36"x36"x1 15/16" (50x914x914)

- IT IS RECOMMENDED TO HAVE AT LEAST TWO PEOPLE SET COUNTERTOP IN PLACE.
- SLIDE IN PLACE UNTIL HOLES IN COUNTERTOP ALIGN WITH THE HOLES IN SUPPORT FRAME.
- WHEN SETTING COUNTERTOP IN PLACE, MAKE SURE YOUR FINGERS ARE CLEAR AND NOT UNDERNEATH COUNTERTOP.

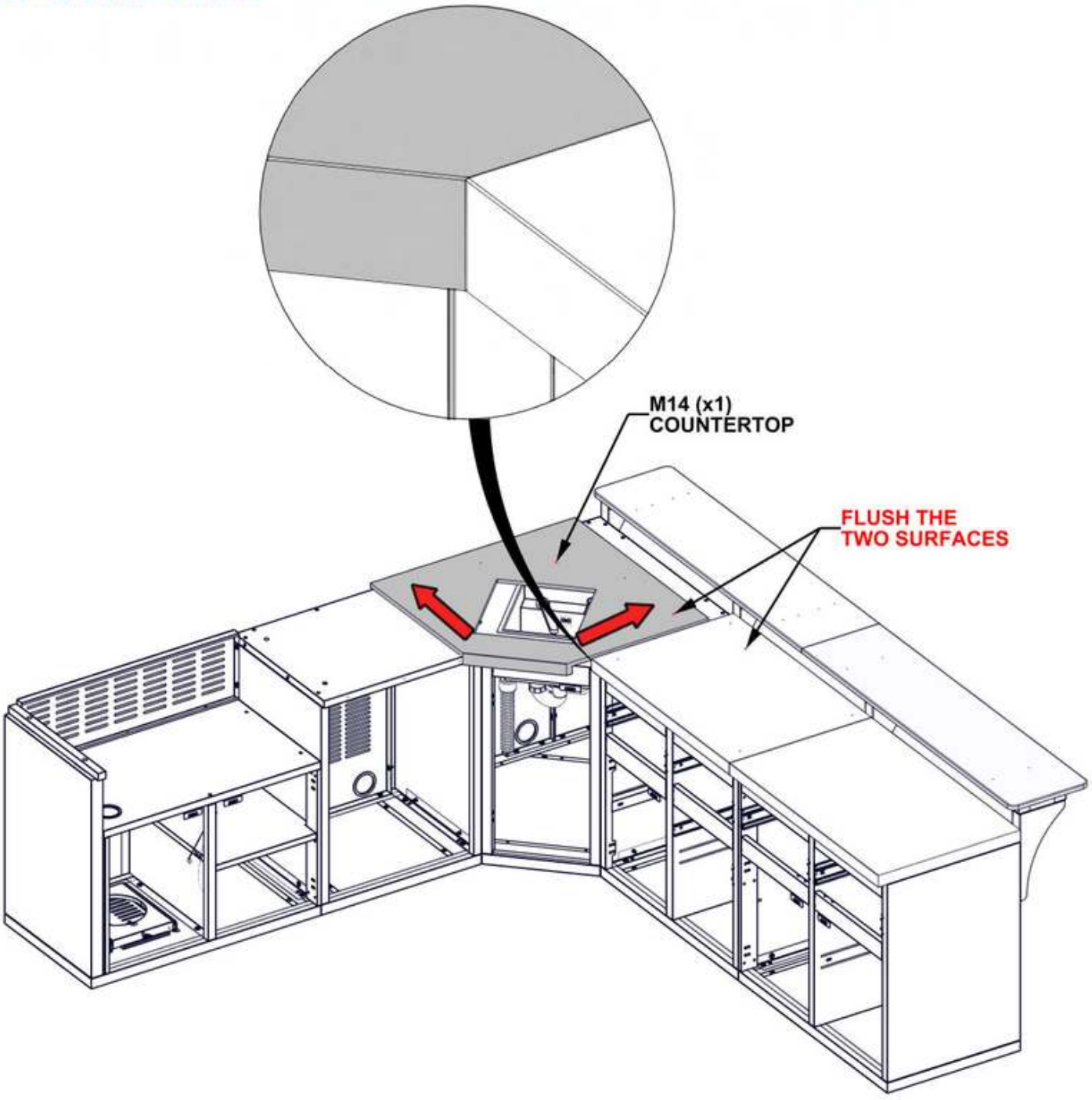

STEP 51B - SINK CABINET COUNTERTOP INSTALLATION

Qty	PartNo	Description
2	H101292	TORX PAN HEAD 1/4-20x13/32"
2	H101053	STEEL WASHER 6x20
2	H101054	SEALANT WASHER

- IT IS RECOMMENDED TO USE THE 6" MAGNETIC DRIVER EXTENSION PROVIDED IN YOUR HARDWARE KIT FOR THIS STEP.
- MAKE SURE YOU ARE USING THE CORRECT HARDWARE FOR THIS STEP.
- ONCE COUNTERTOP IS IN PLACE, IT IS RECOMMENDED TO COVER WITH A PIECE OF CARDBOARD OR FOAM UNTIL ASSEMBLY IS FINISHED TO PREVENT DAMAGE.
- DO NOT USE COUNTERTOP SURFACE AS A WORK BENCH.

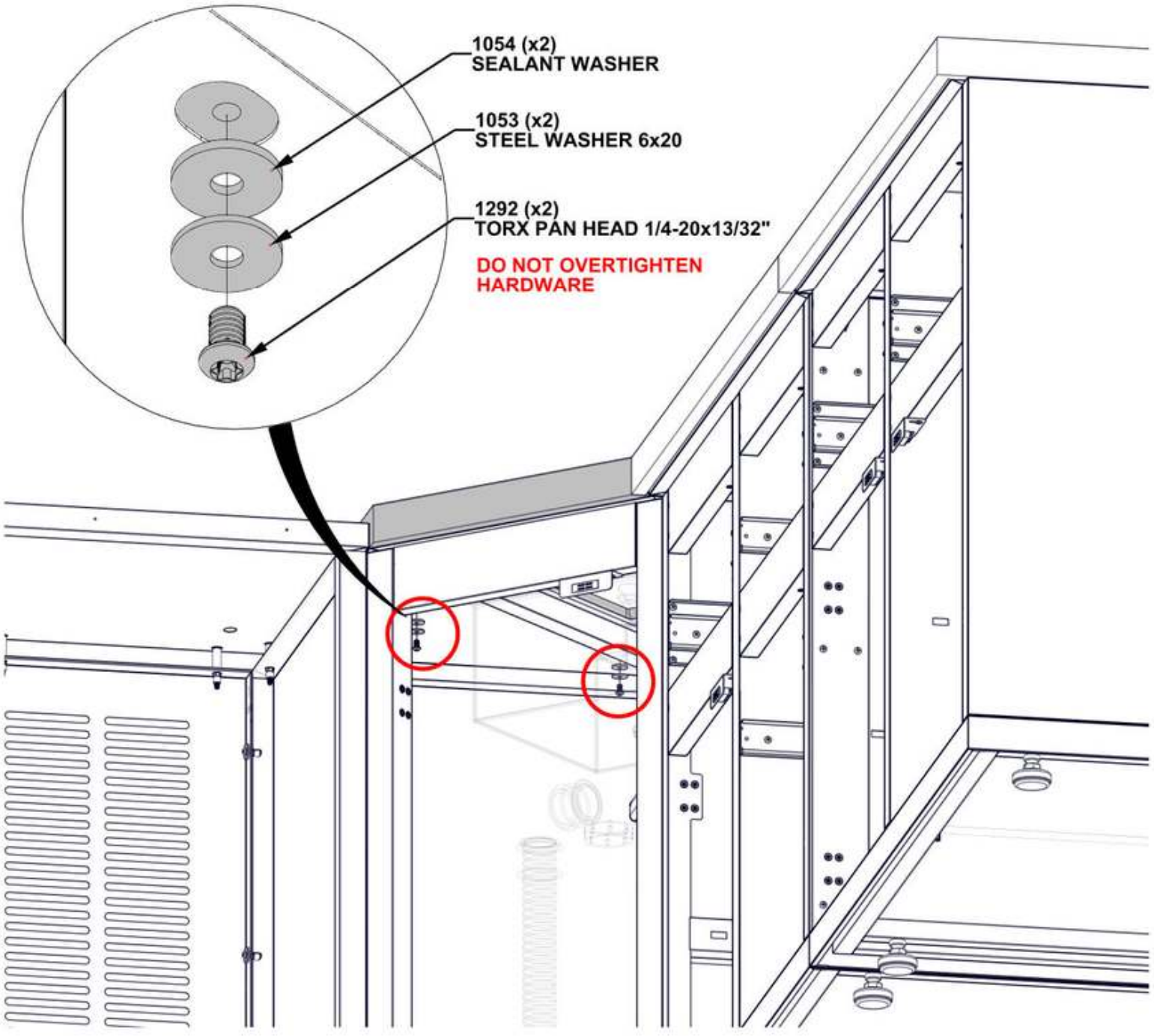

STEP 51C - SINK CABINET COUNTERTOP INSTALLATION

Qty	PartNo	Description
2	H101292	TORX PAN HEAD 1/4-20x13/32"
2	H101053	STEEL WASHER 6x20
2	H101054	SEALANT WASHER

- MAKE SURE YOU ARE USING THE CORRECT HARDWARE FOR THIS STEP.
- ONCE COUNTERTOP IS IN PLACE, IT IS RECOMMENDED TO COVER WITH A PIECE OF CARDBOARD OR FOAM UNTIL ASSEMBLY IS FINISHED TO PREVENT DAMAGE.
- DO NOT USE COUNTERTOP SURFACE AS A WORK BENCH.

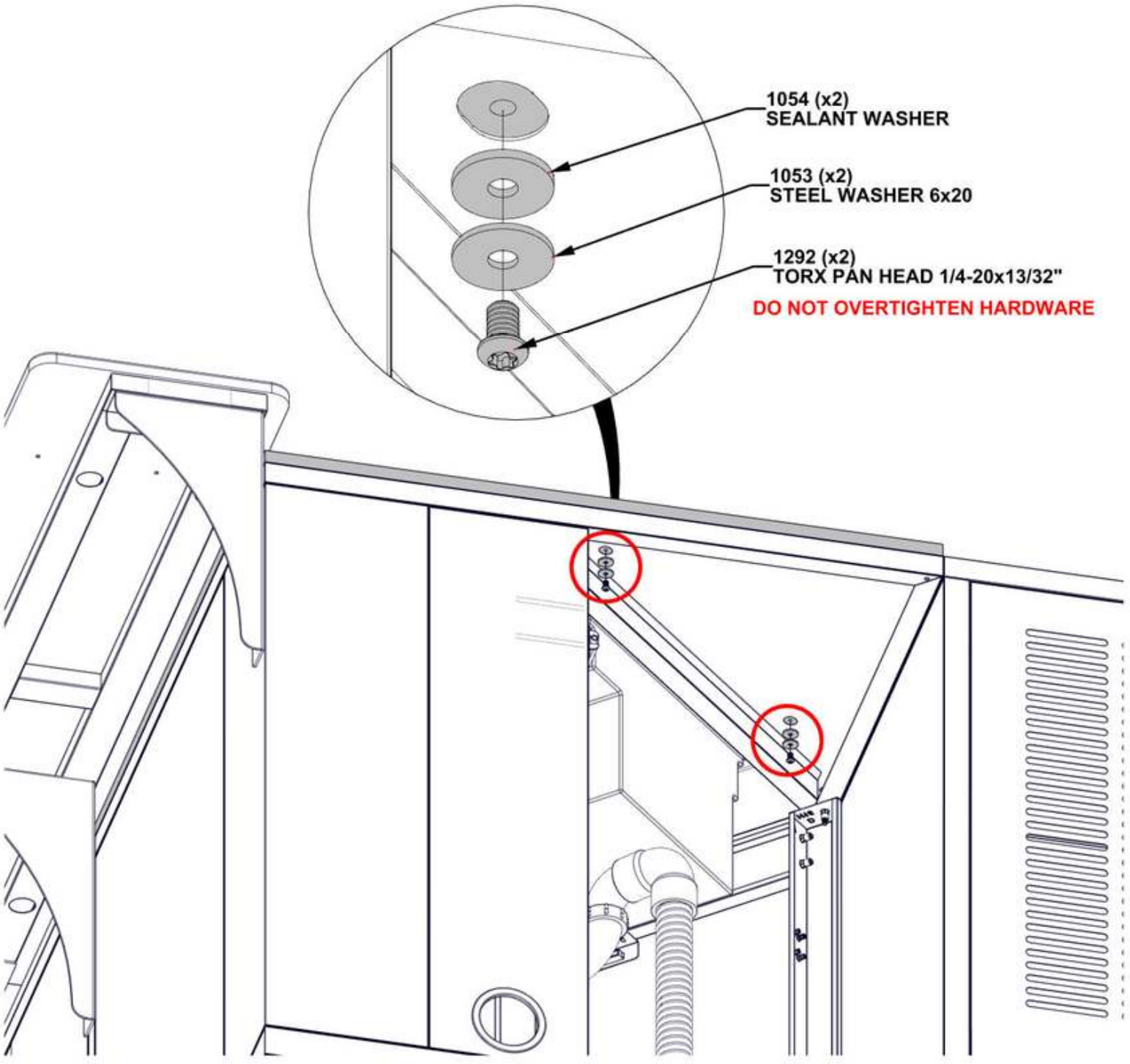

STEP 52 - SINK CABINET COUNTERTOP INSTALLATION



M5 SINK COVER COUNTERTOP - A4M05949
(x1) 11/16"x14 3/4"x16 5/16" (18x375x415)

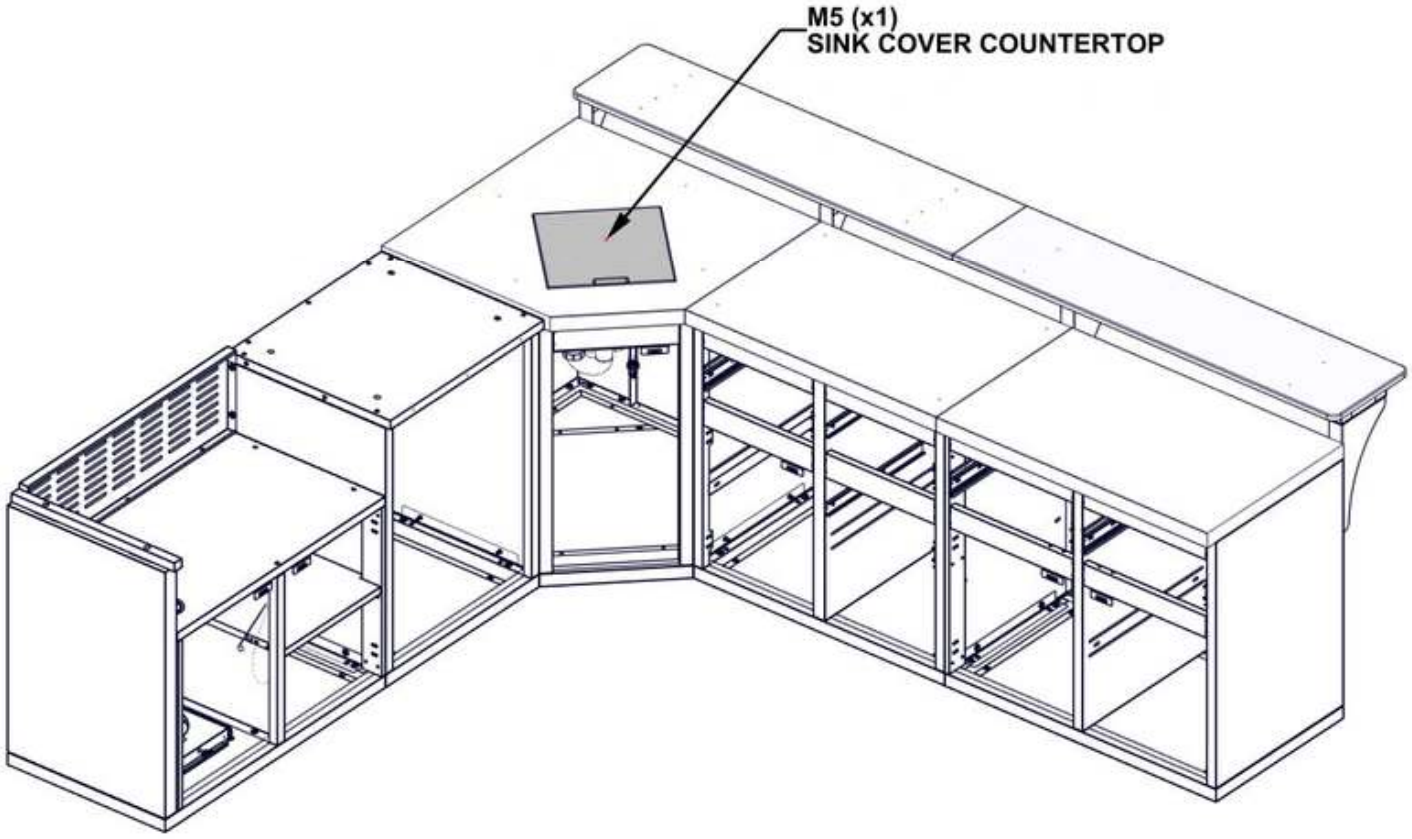

STEP 53A - FRIDGE CABINET COUNTERTOP INSTALLATION



M13 COUNTERTOP - A4M05953
(x1) 28 1/8"x24 15/16"x1 15/16" (50x634x715)

- IT IS RECOMMENDED TO HAVE AT LEAST TWO PEOPLE SET COUNTERTOP IN PLACE.
- SLIDE IN PLACE UNTIL HOLES IN COUNTERTOP ALIGN WITH THE HOLES IN SUPPORT FRAME.
- WHEN SETTING COUNTERTOP IN PLACE, MAKE SURE YOUR FINGERS ARE CLEAR AND NOT UNDERNEATH COUNTERTOP.

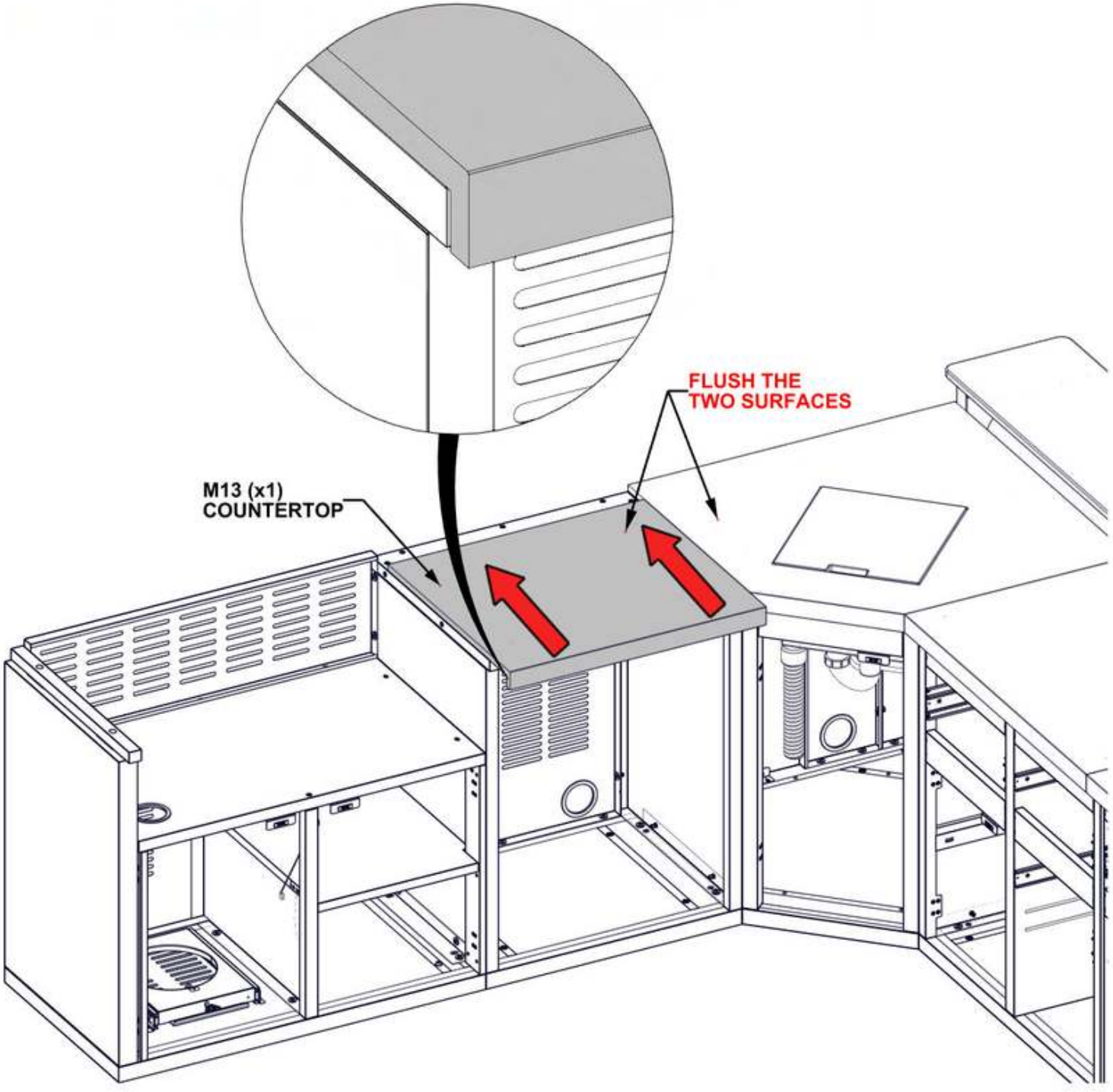

STEP 53B - FRIDGE CABINET COUNTERTOP INSTALLATION

Qty	PartNo	Description
4	H101292	TORX PAN HEAD 1/4-20x13/32"
4	H101053	STEEL WASHER 6x20
4	H101054	SEALANT WASHER

- MAKE SURE YOU ARE USING THE CORRECT HARDWARE FOR THIS STEP.
- ONCE COUNTERTOP IS IN PLACE, IT IS RECOMMENDED TO COVER WITH A PIECE OF CARDBOARD OR FOAM UNTIL ASSEMBLY IS FINISHED TO PREVENT DAMAGE.
- DO NOT USE COUNTERTOP SURFACE AS A WORK BENCH.

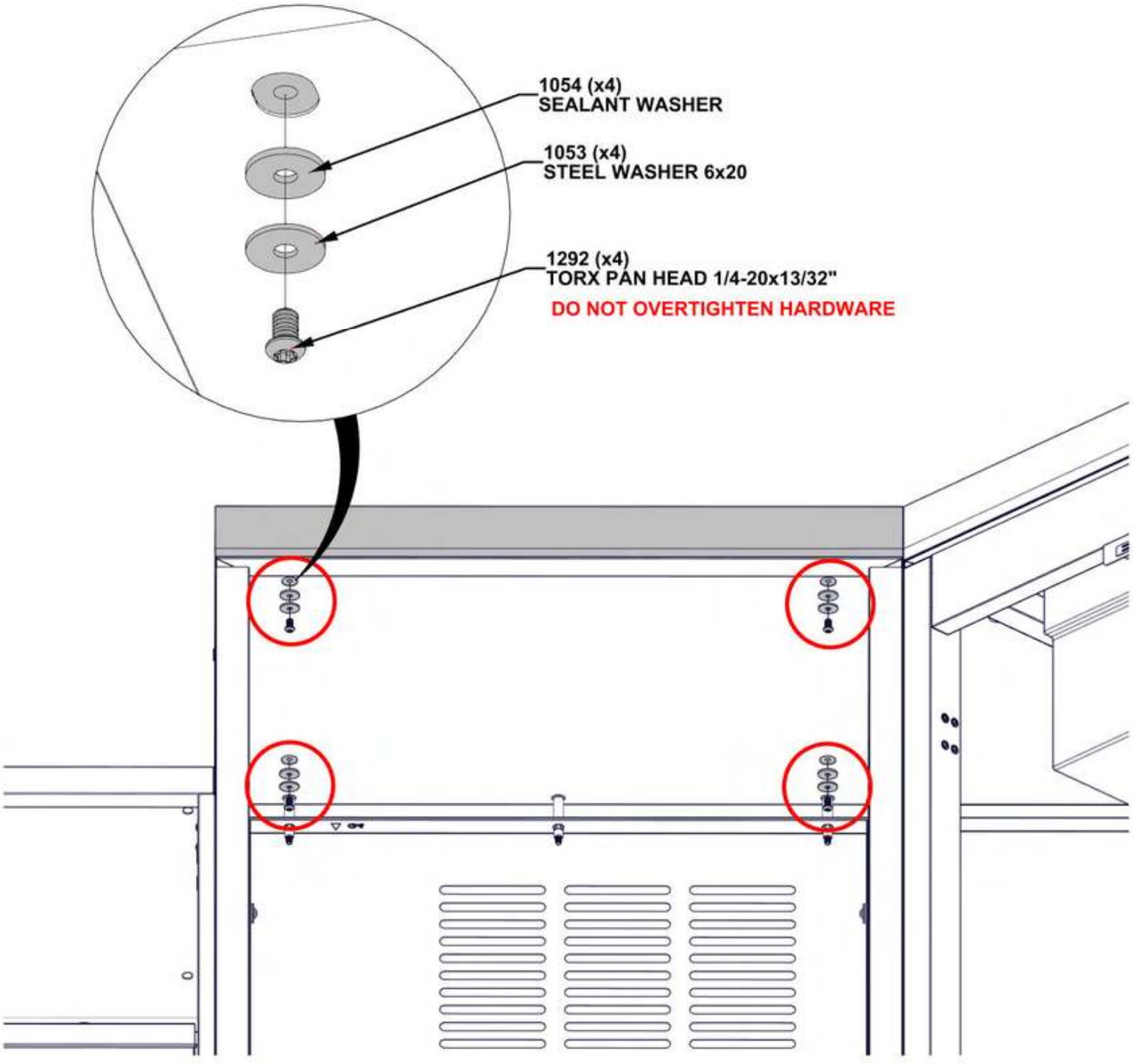

STEP 54A - CABINET COUNTERTOP INSTALLATION



M16 COUNTERTOP - A4M05959
(x1) 24 15/16"x2 1/16"x1 15/16" (50x53x634)

- IT IS RECOMMENDED TO HAVE AT LEAST TWO PEOPLE SET COUNTERTOP IN PLACE.
- SLIDE IN PLACE UNTIL HOLES IN COUNTERTOP ALIGN WITH THE HOLES IN SUPPORT FRAME.
- WHEN SETTING COUNTERTOP IN PLACE, MAKE SURE YOUR FINGERS ARE CLEAR AND NOT UNDERNEATH COUNTERTOP.

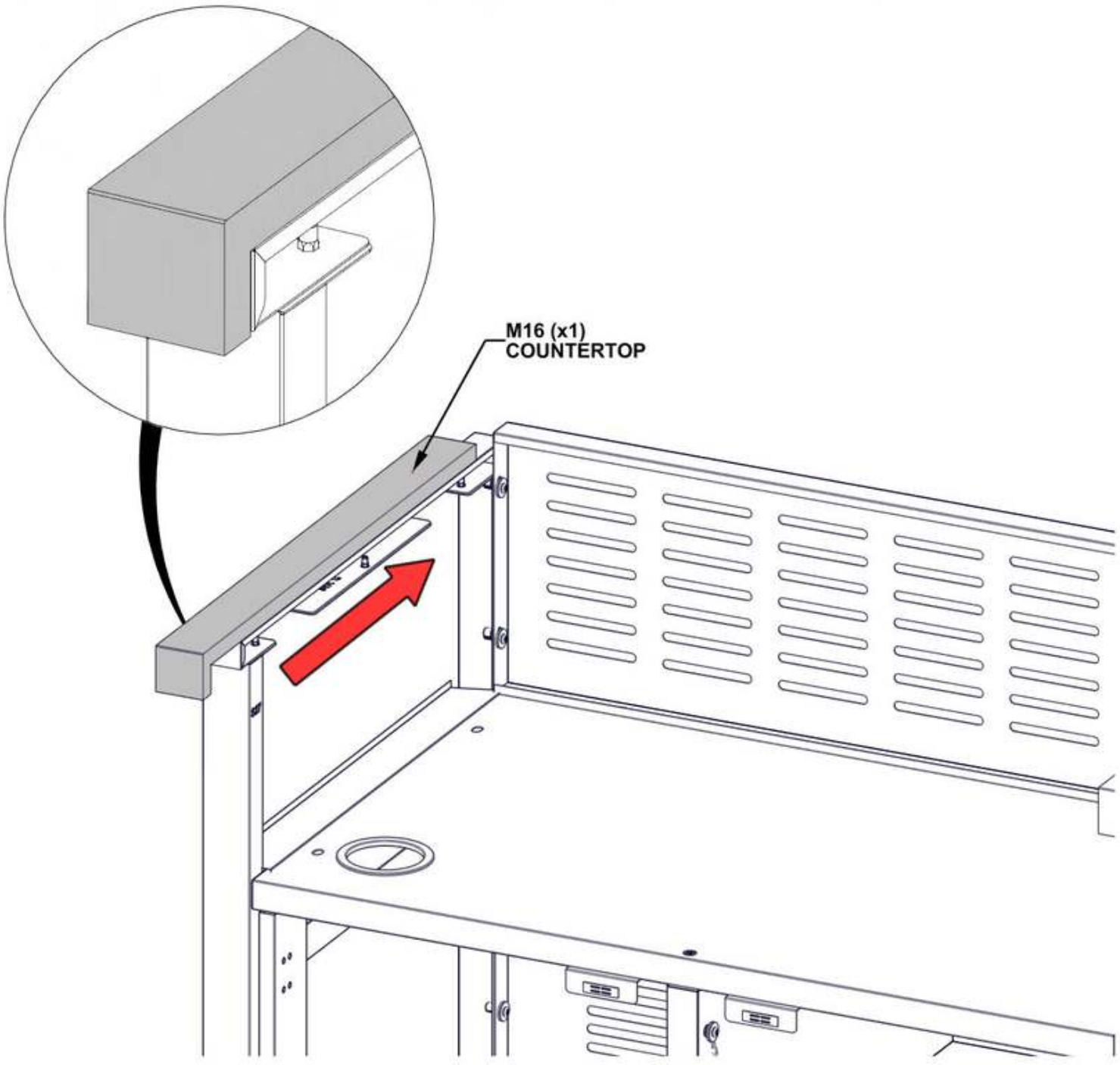

STEP 54B - CABINET COUNTERTOP INSTALLATION

Qty	PartNo	Description
2	H101292	TORX PAN HEAD 1/4-20x13/32"
2	H101053	STEEL WASHER 6x20
2	H101054	SEALANT WASHER

- MAKE SURE YOU ARE USING THE CORRECT HARDWARE FOR THIS STEP.
- ONCE COUNTERTOP IS IN PLACE, IT IS RECOMMENDED TO COVER WITH A PIECE OF CARDBOARD OR FOAM UNTIL ASSEMBLY IS FINISHED TO PREVENT DAMAGE.
- DO NOT USE COUNTERTOP SURFACE AS A WORK BENCH.

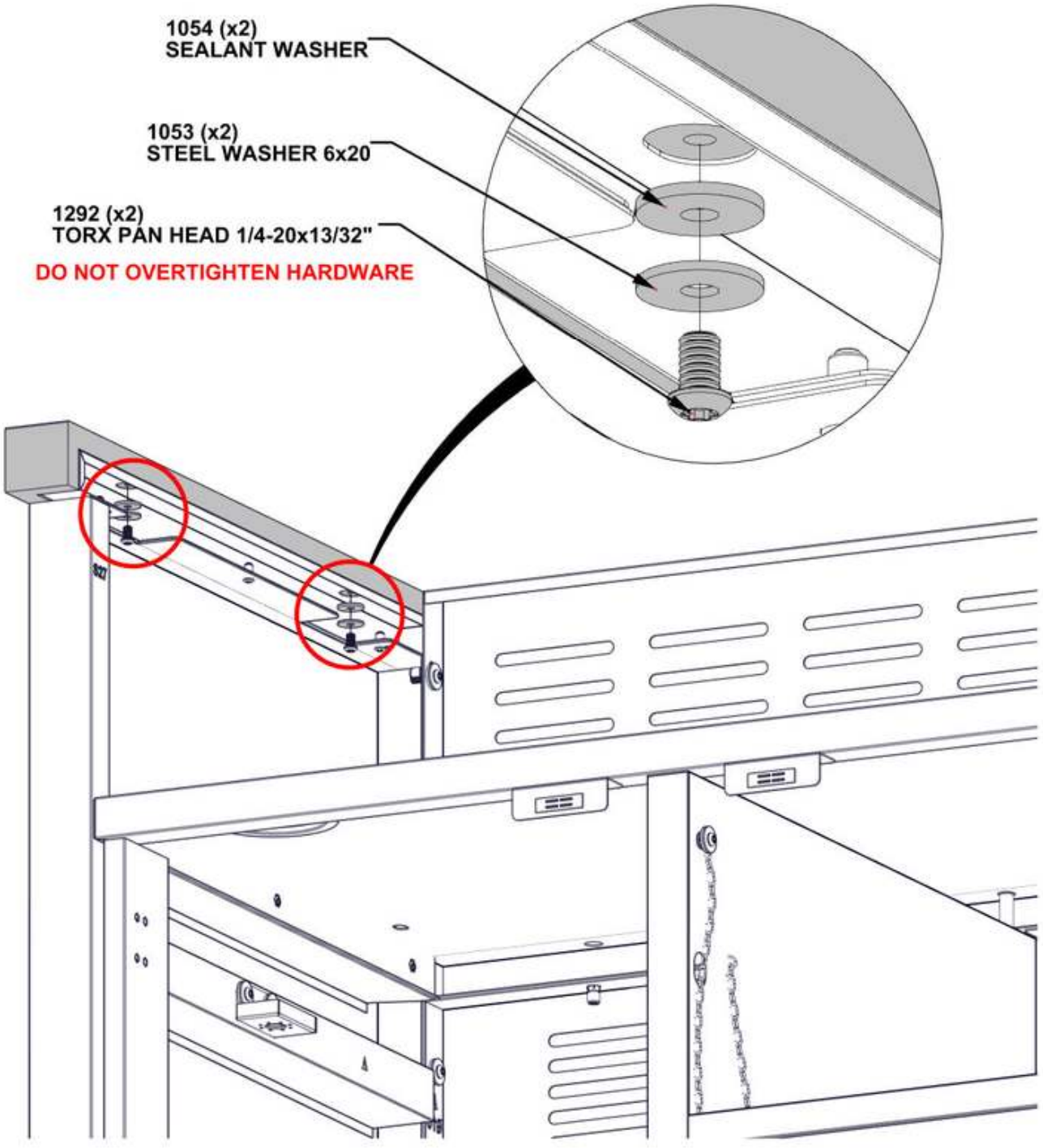

STEP 55 - SINK CABINET DOOR INSTALLATION



D17 CABINET DOOR ASSEMBLY - A4M03682
(x1) 33 7/8"x18 1/4"x15/16" (23.20x463x860.40)

- INSERT HINGE PIN ON BOTTOM DOOR INTO THE HOLE ON FLOOR PANEL.
- PRESS DOWN HINGE PIN ON TOP DOOR INTO THE HOLE ON TOPTABLE ASSEMBLY.

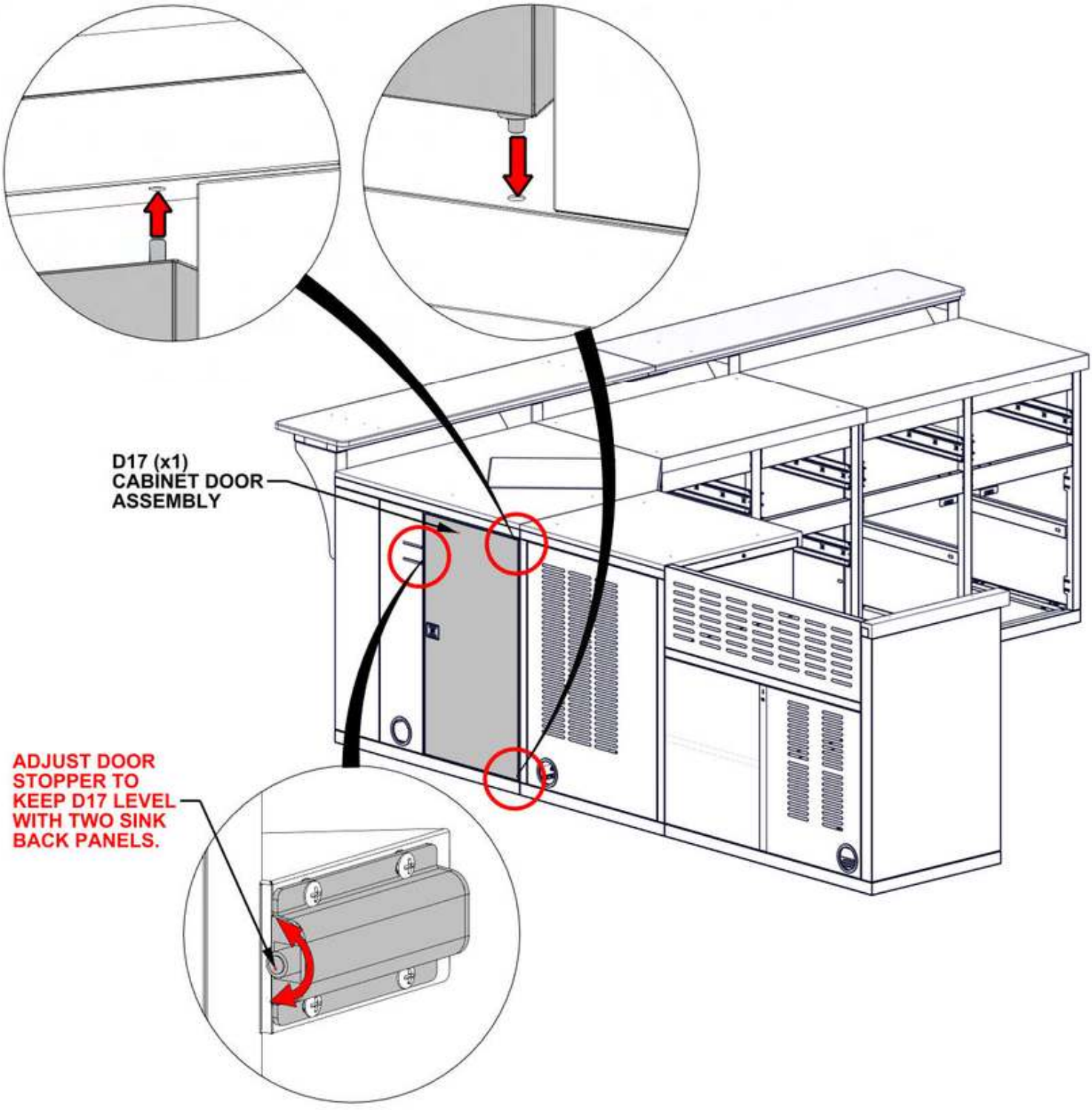

STEP 56A - TRASH CAN ASSEMBLY

Qty	PartNo	Description
6	H101289	PAN HEAD SCREW 8-32x1/2" SS

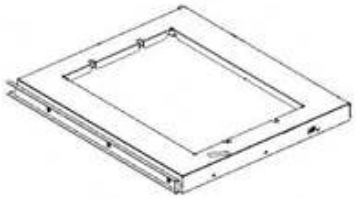



H3 TRASH CAN BRACKET ASSEMBLY - A4M03610
(x1) 18 1/16"x15 13/16"x1 3/8" (35x401x458)

A11 TRIANGLE PANEL - A4M03086
(x2) 13/16"x13 3/4"x13 3/4" (20x350x350)

- IT IS RECOMMENDED TO USE THE 6" MAGNETIC DRIVER EXTENSION PROVIDED IN YOUR HARDWARE KIT FOR THIS STEP.

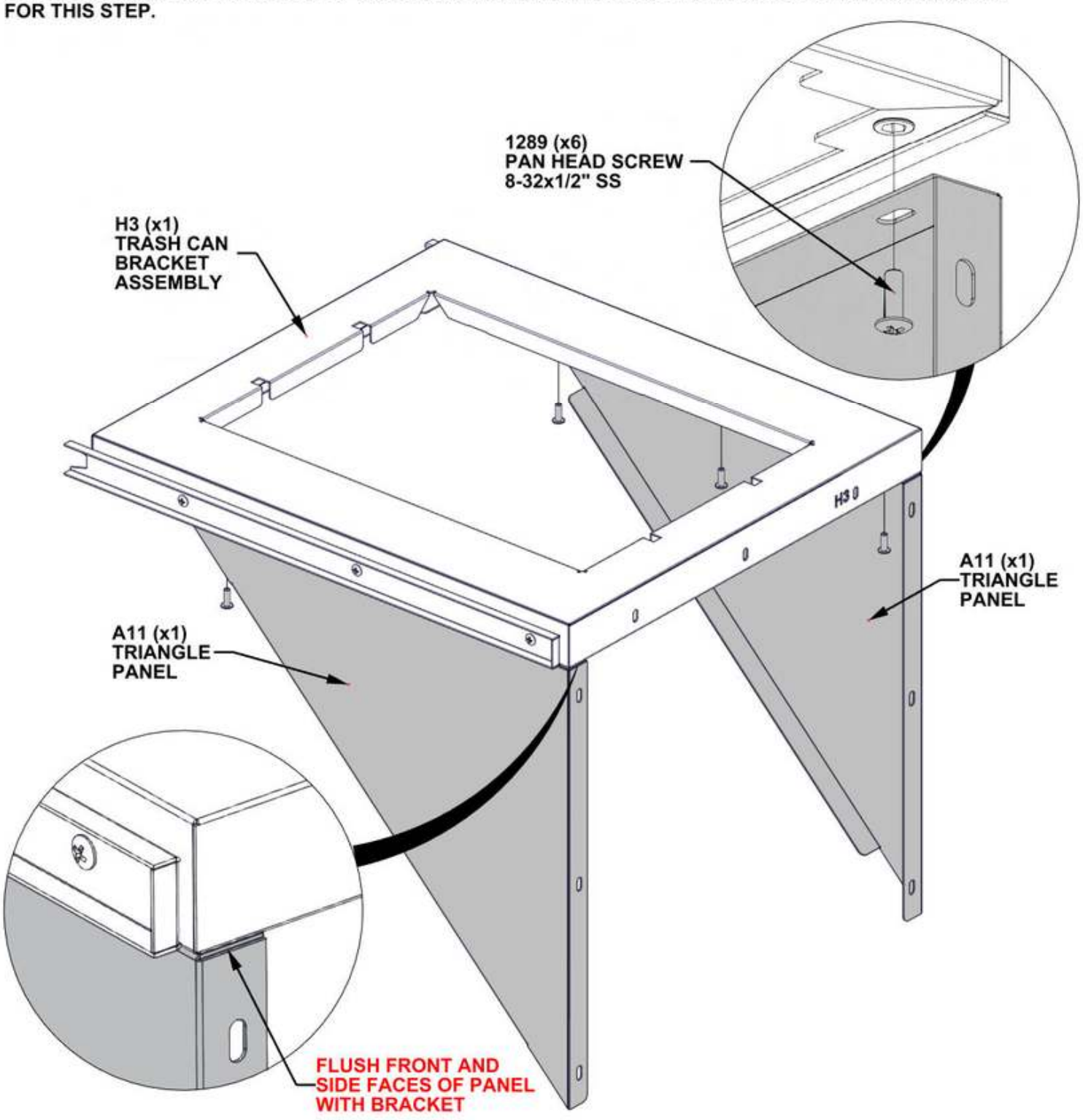

STEP 56B - TRASH CAN ASSEMBLY

Qty	PartNo	Description
9	H101289	PAN HEAD SCREW 8-32x1/2" SS

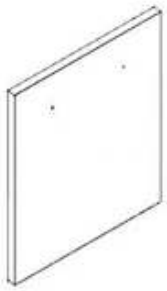

D9 TRASH CAN PANEL ASSEMBLY - A4M03608
(x1) 22 1/4"x17 3/4"x15/16" (24x451x565)

- IT IS RECOMMENDED TO USE THE 6" MAGNETIC DRIVER EXTENSION PROVIDED IN YOUR HARDWARE KIT FOR THIS STEP.

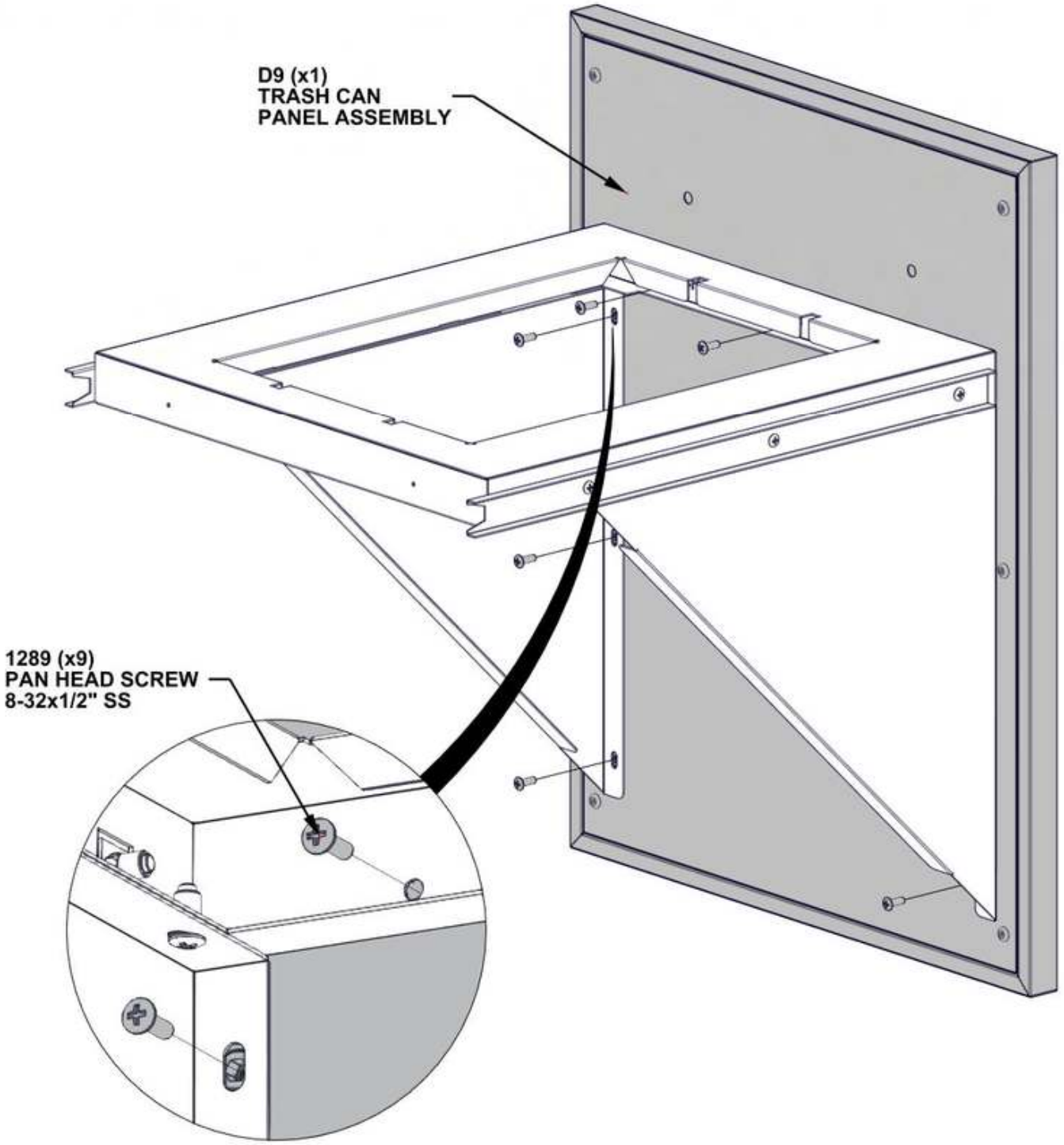

STEP 56C - TRASH CAN ASSEMBLY

Qty	PartNo	Description
2	H101307	SHOULDER BOLT 8-32x30mm SS

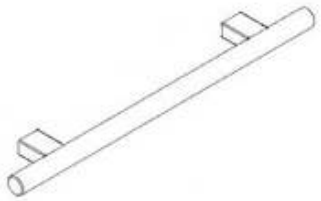

H2 STAINLESS STEEL HANDLE - A4M03024
(x1) 5/8"x1 9/16"x11 13/16" (16x40x300)

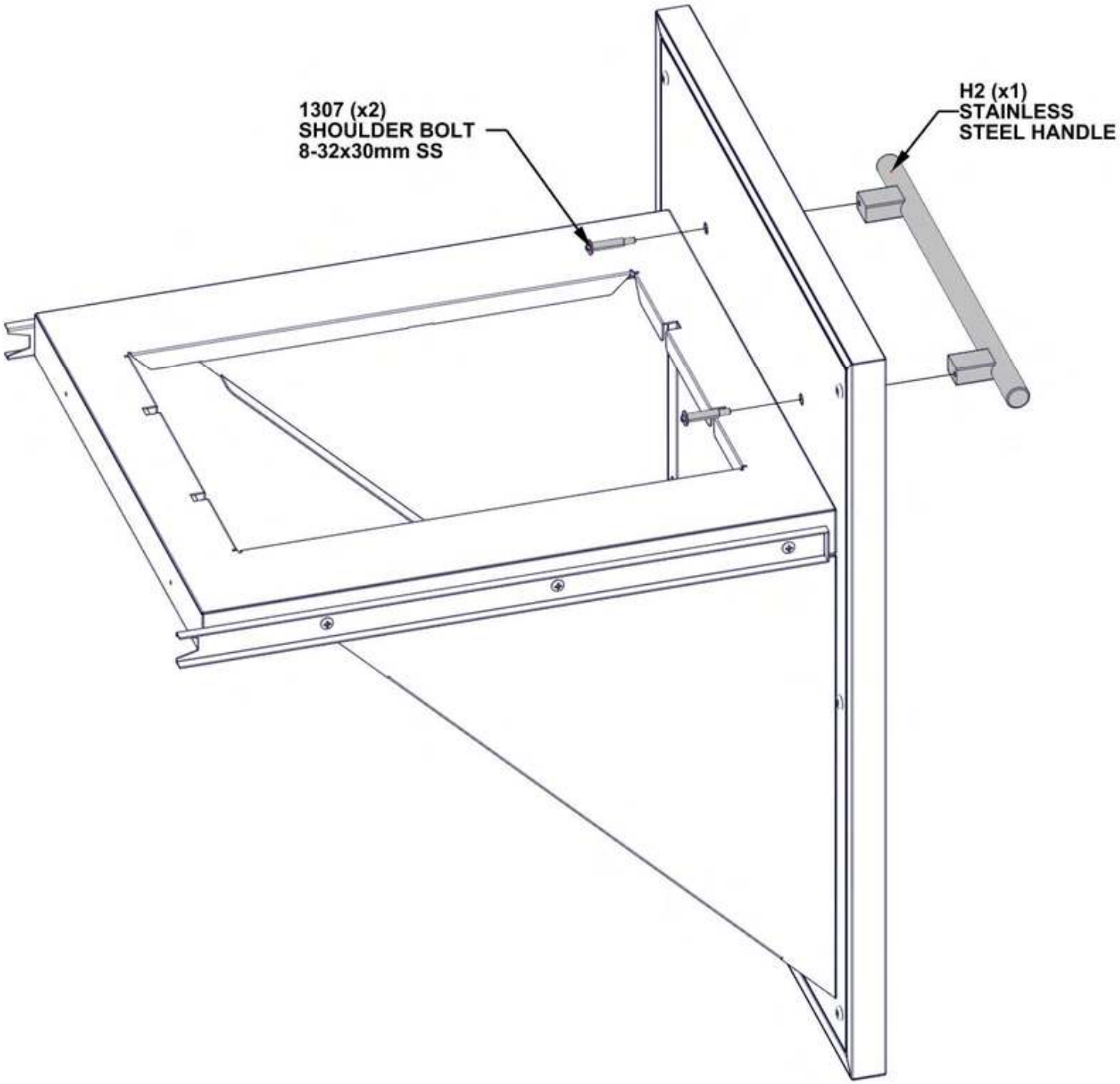

STEP 57 - TRASH CAN INSTALLATION



TRASH CAN ASSEMBLY STEPS FROM 56A -56C

- ATTACH TRASH CAN ASSEMBLY BY ALIGNING BOTH ENDS OF FACTORY ASSEMBLED DRAWER SLIDES WITH ONE ANOTHER.
- PRESS TOGETHER UNTIL DRAWER SLIDES CONNECT.

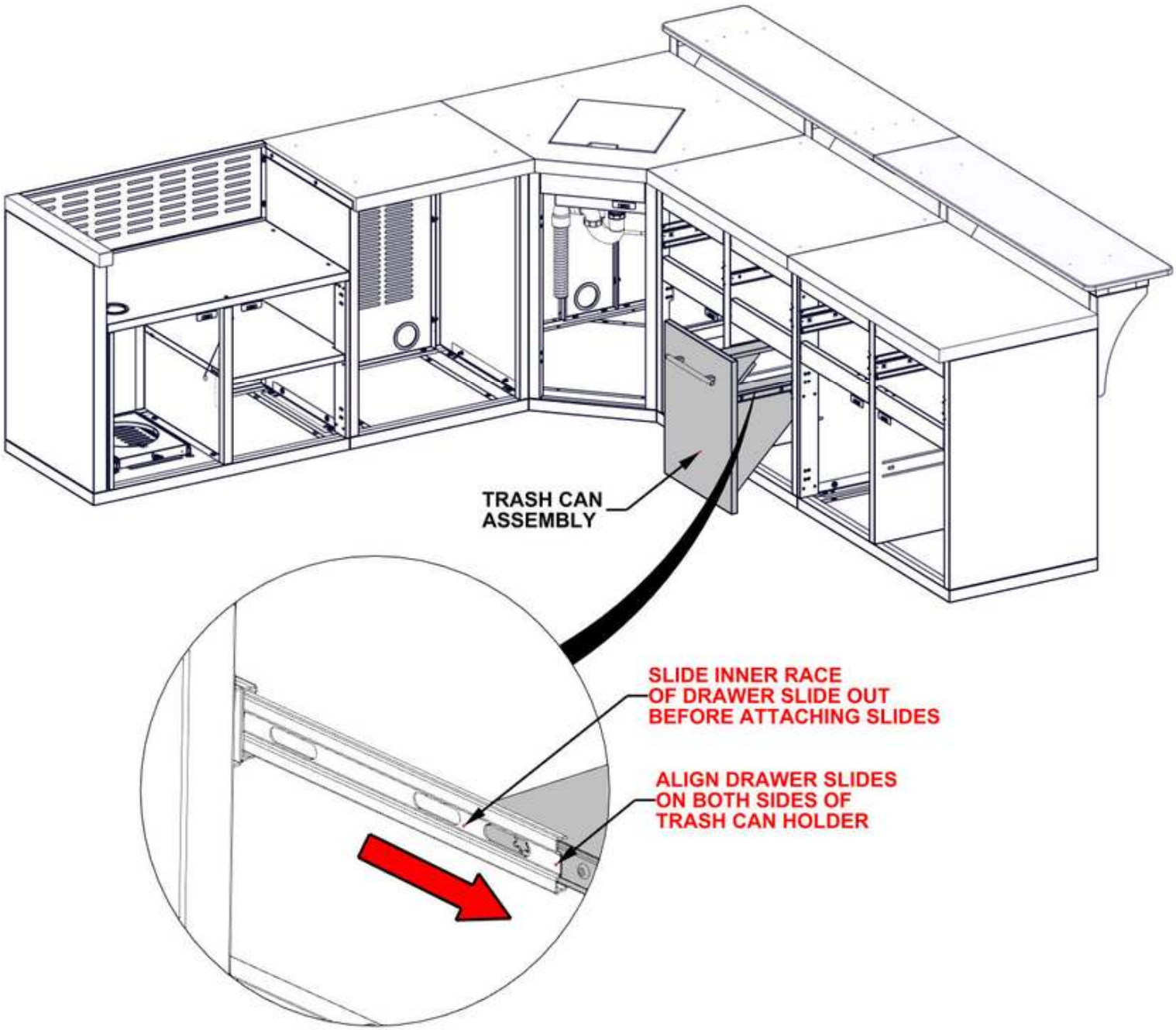

STEP 58A - DRAWER ASSEMBLY

Qty	PartNo	Description
9	H101289	PAN HEAD SCREW 8-32x1/2" SS

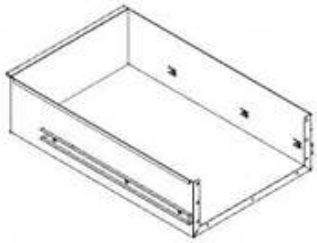

D19 DRAWER BODY ASSEMBLY - A4M03698
(x1) 22 1/4"x17 3/4"x5 3/4" (145x450x565)

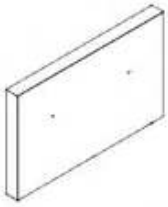

D18 DRAWER PANEL ASSEMBLY L - A4M03696
(x1) 19 9/16"x10 1/4"x15/16" (24x260x498)

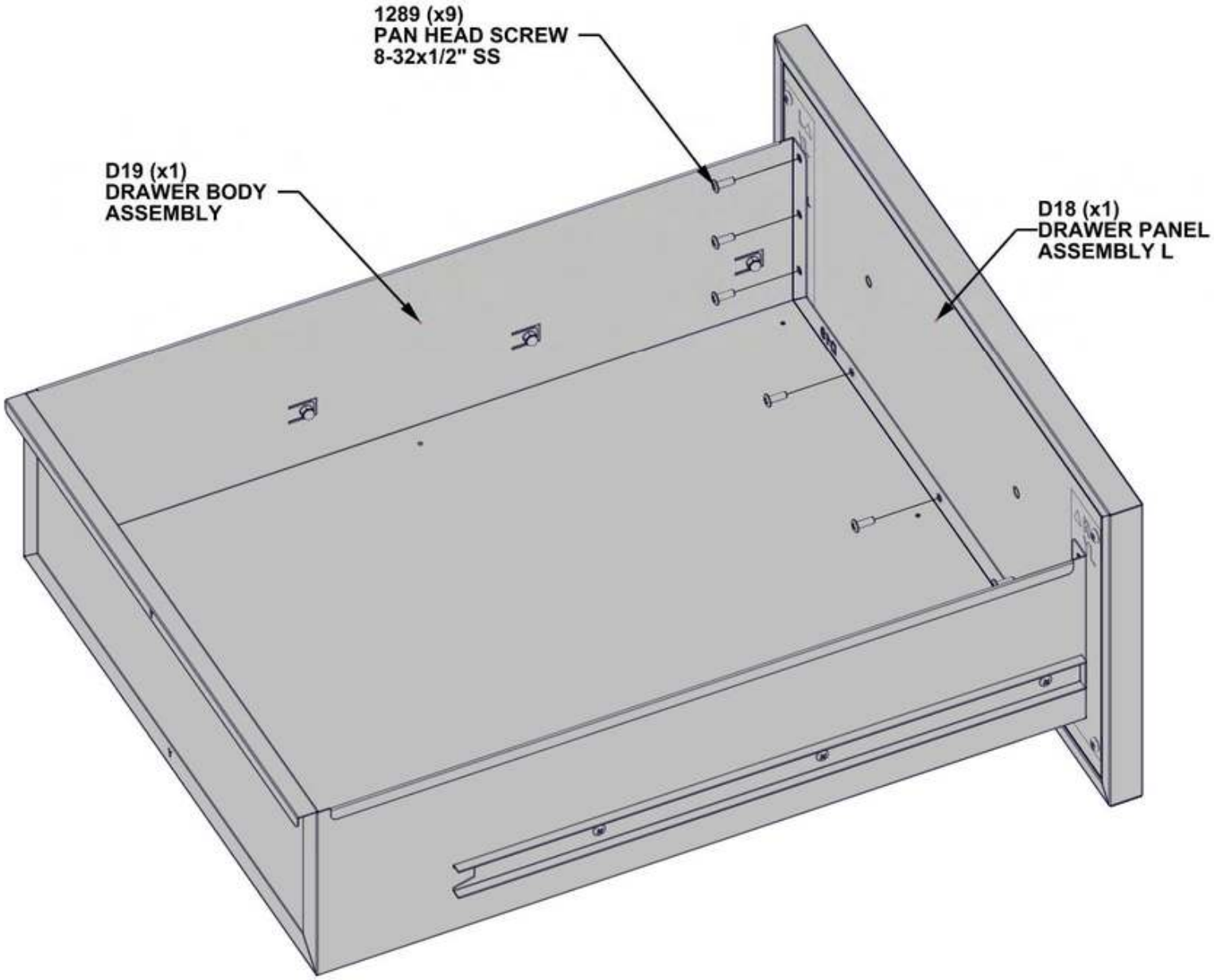

STEP 58B - DRAWER ASSEMBLY

Qty	PartNo	Description
2	H101307	SHOULDER BOLT 8-32x30mm SS

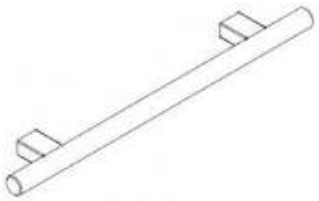

H2 STAINLESS STEEL HANDLE - A4M03024
(x1) 5/8"x1 9/16"x11 13/16" (16x40x300)

- INSTALL DRAWER HANDLE TO DRAWER.

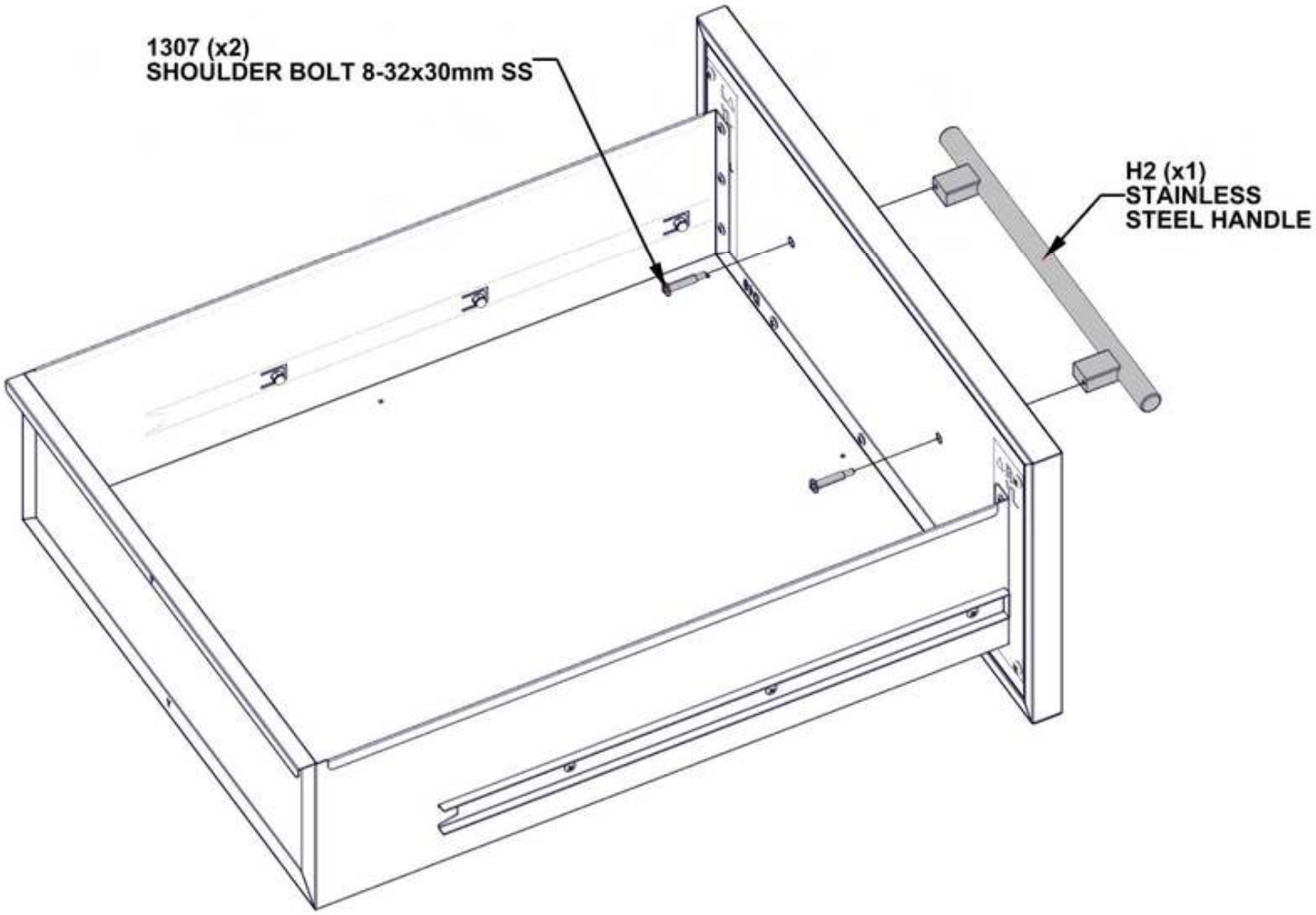

STEP 59A - DRAWER ASSEMBLY

Qty	PartNo	Description
9	H101289	PAN HEAD SCREW 8-32x1/2" SS

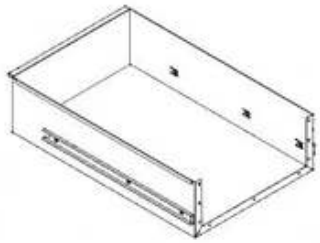

D19 DRAWER BODY ASSEMBLY - A4M03698
(x1) 22 1/4"x17 3/4"x5 3/4" (145x450x565)

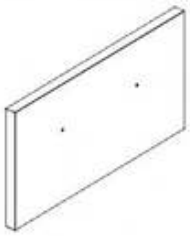

D22 DRAWER PANEL ASSEMBLY R - A4M03706
(x1) 19 9/16"x10 1/4"x15/16" (24x260x498)

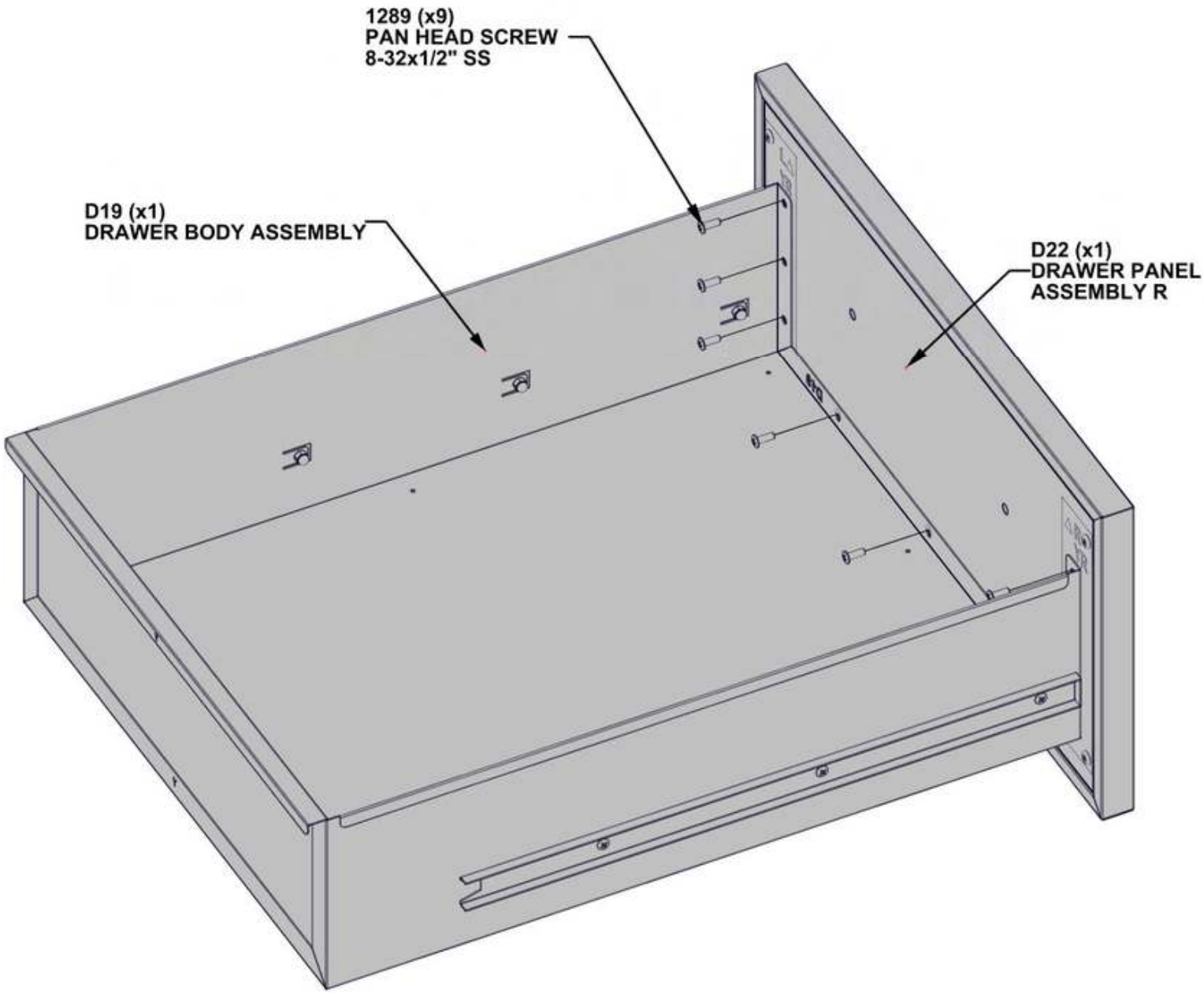

STEP 59B - DRAWER ASSEMBLY

Qty	PartNo	Description
2	H101307	SHOULDER BOLT 8-32x30mm SS

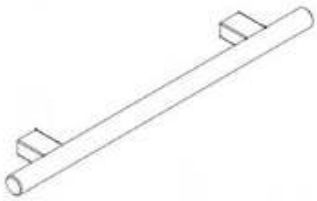

H2 STAINLESS STEEL HANDLE - A4M03024
(x1) 5/8"x1 9/16"x11 13/16" (16x40x300)

- INSTALL DRAWER HANDLE TO DRAWER.

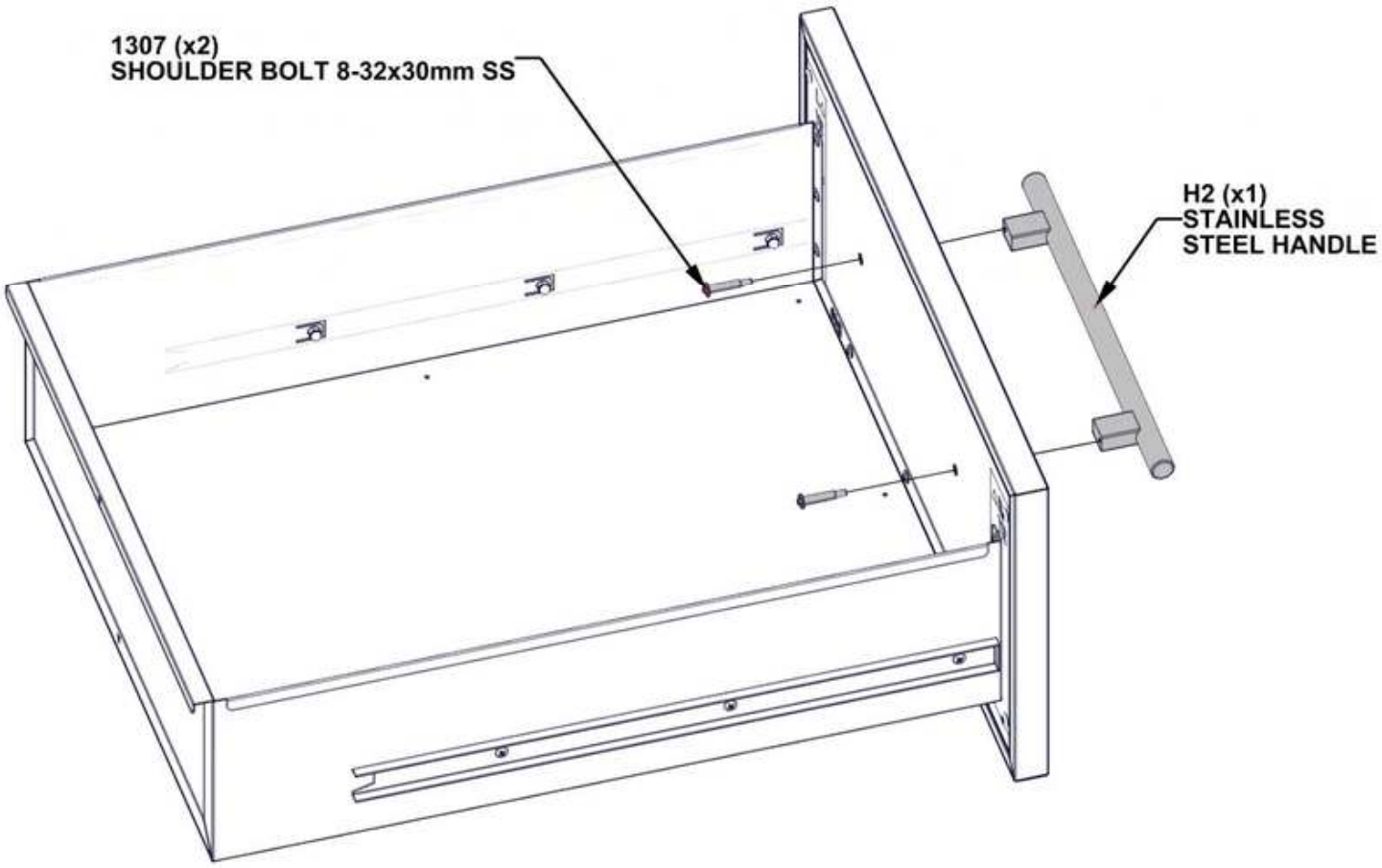

STEP 60A - DRAWER ASSEMBLY

Qty	PartNo	Description
18	H101289	PAN HEAD SCREW 8-32x1/2" SS

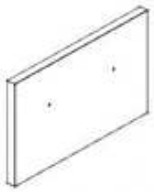

D3 CABINET DRAWER PANEL ASSEMBLY - A4M03569
(x2) 17 3/4"x10 1/4"x15/16" (24x260x451)

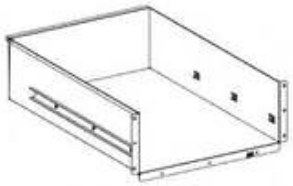

D4 CABINET DRAWER BODY ASSEMBLY - A4M03571
(x2) 22 1/4"x16 1/16"x6 7/16" (164x408x565)

- REPEAT THIS STEP 2 TIMES.

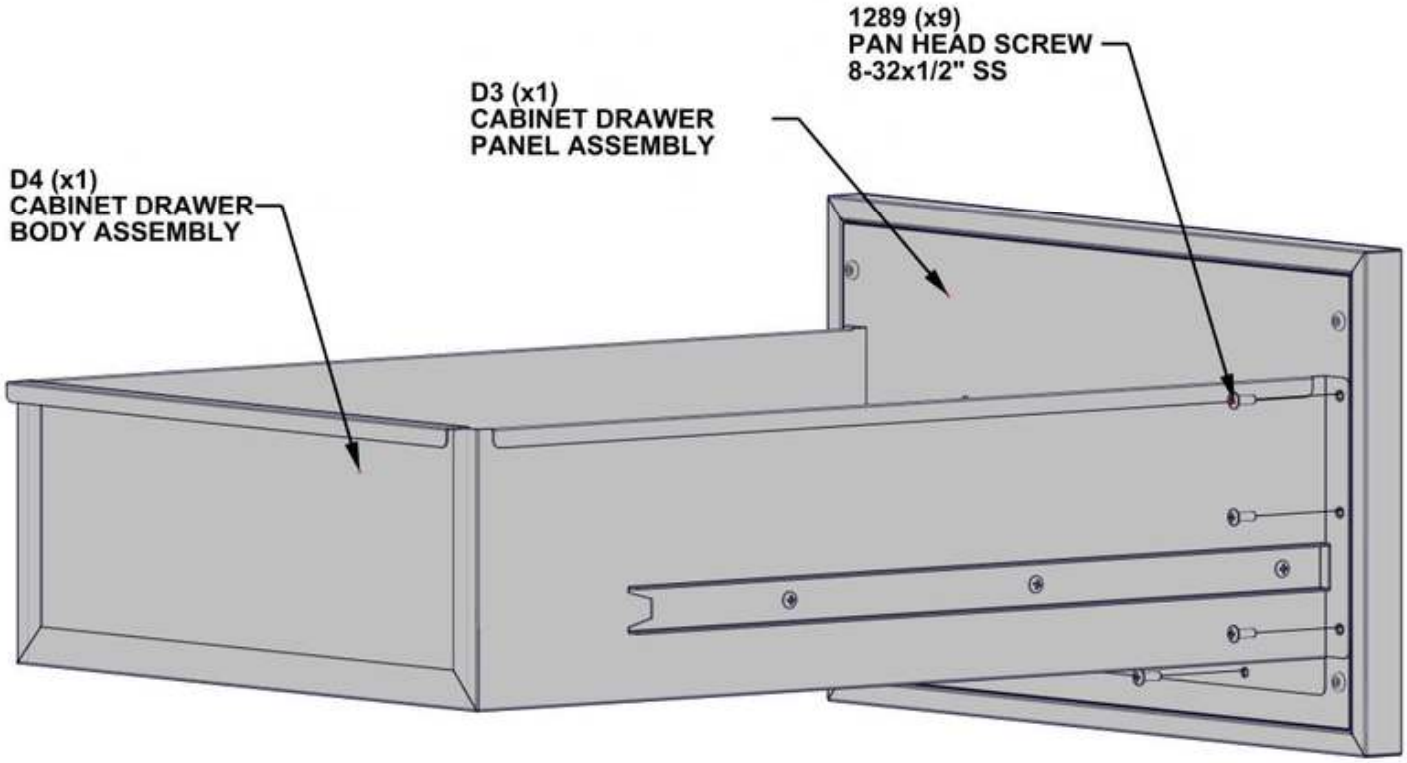

STEP 60B - DRAWER ASSEMBLY

Qty	PartNo	Description
4	H101307	SHOULDER BOLT 8-32x30mm SS

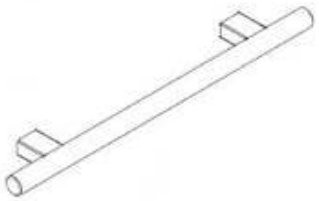

H2 STAINLESS STEEL HANDLE - A4M03024
(x2) 5/8"x1 9/16"x11 13/16" (16x40x300)

- INSTALL DRAWER HANDLE TO DRAWER.
- REPEAT THIS STEP 2 TIMES.

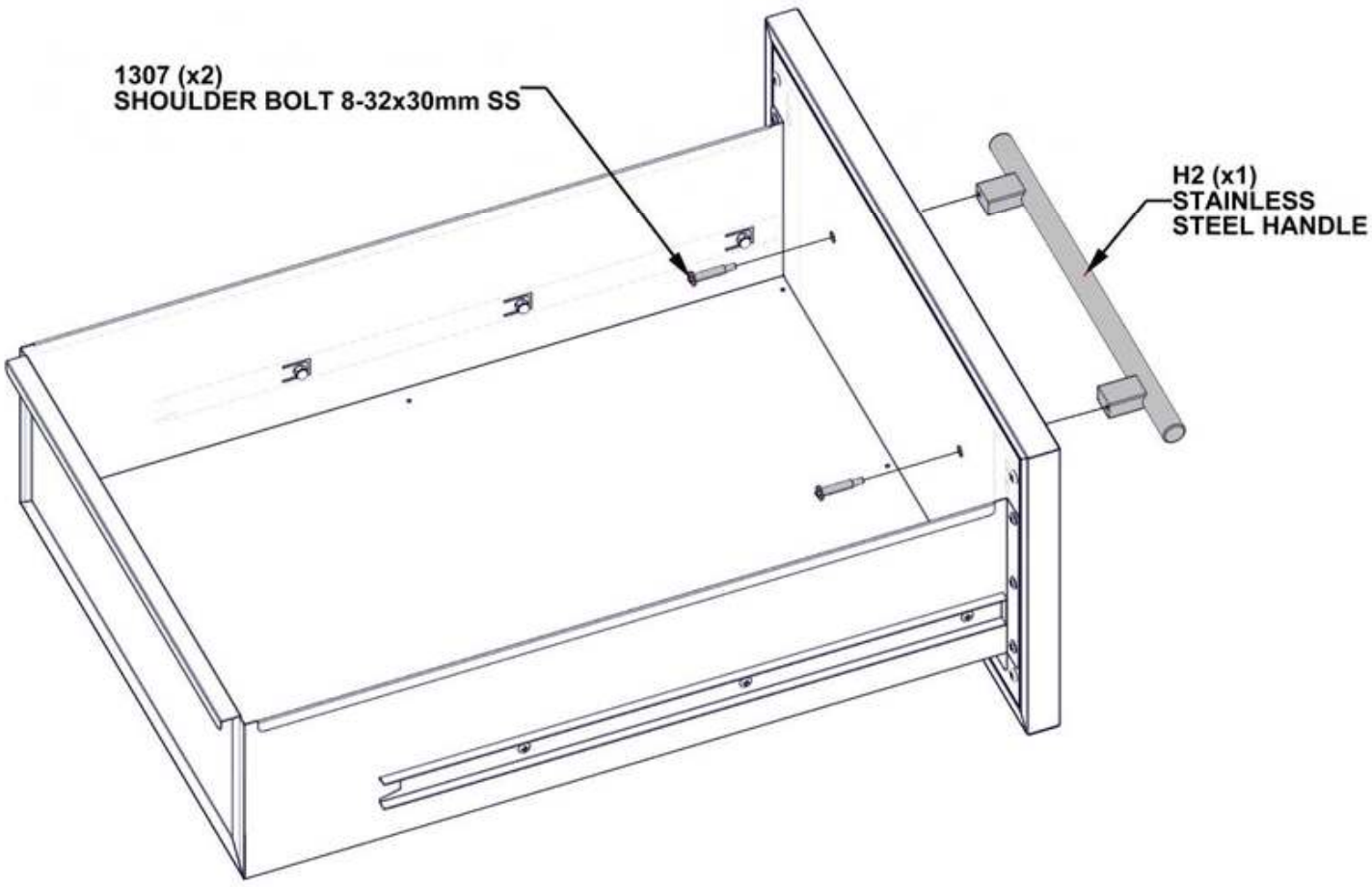

STEP 61A - CABINET DRAWER ATTACHMENT

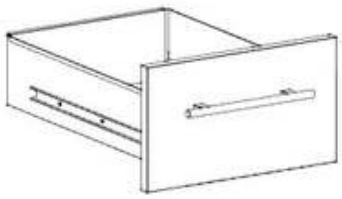

DRAWER ASSEMBLY STEPS FROM 60A-60B

- ATTACH DRAWER ASSEMBLY BY ALIGNING BOTH ENDS OF FACTORY ASSEMBLED DRAWER SLIDES WITH ONE ANOTHER.
- PRESS TOGETHER UNTIL DRAWER SLIDES CONNECT.

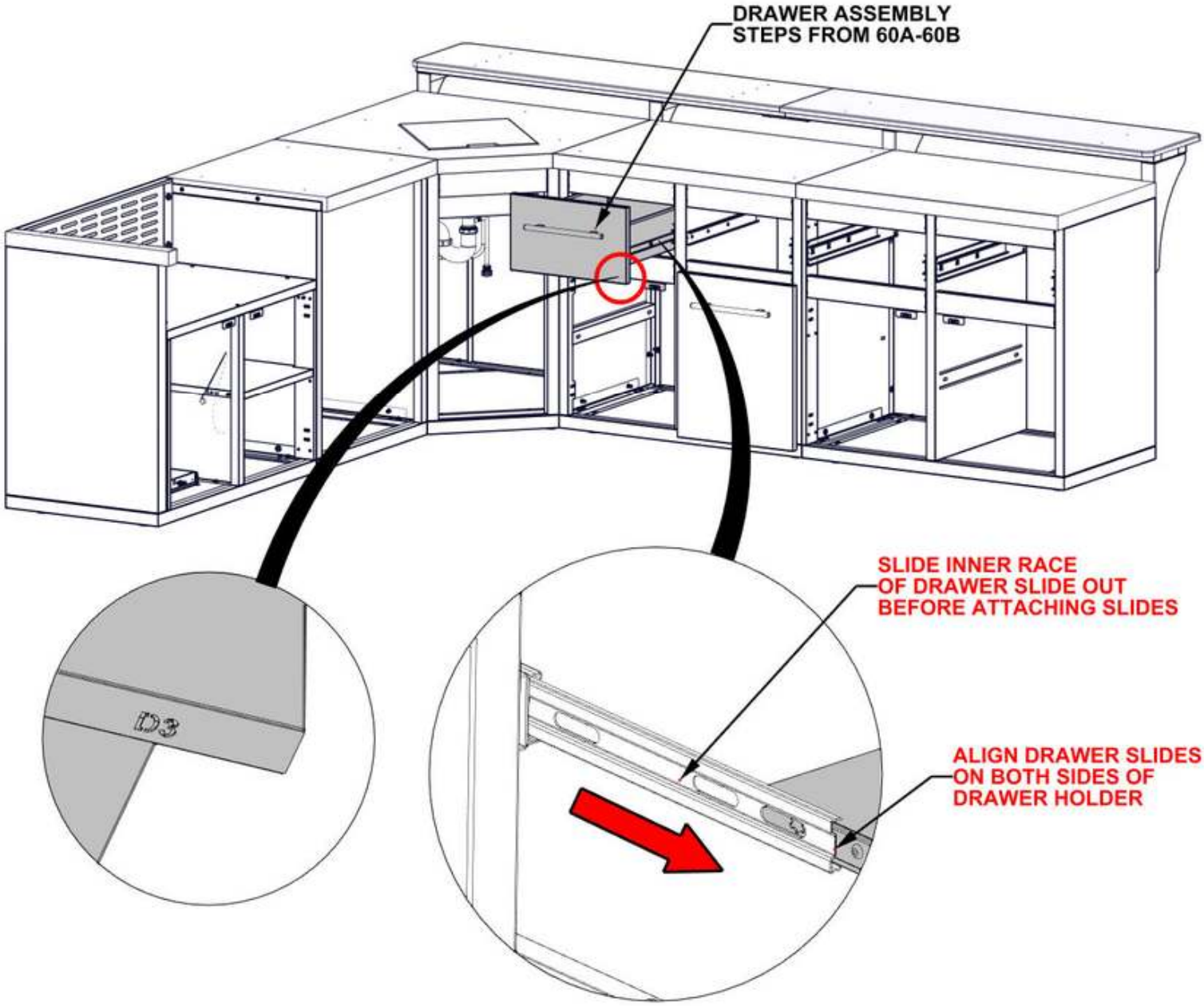

STEP 61B - CABINET DRAWER ATTACHMENT

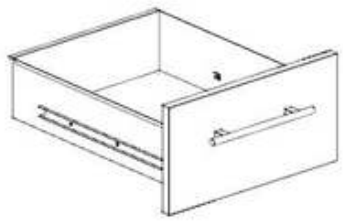

DRAWER ASSEMBLY STEPS 58A-58B

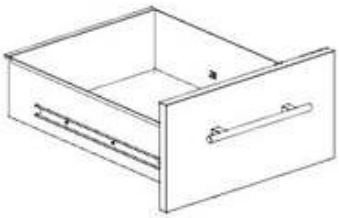

DRAWER ASSEMBLY STEPS 59A-59B

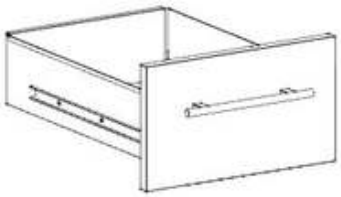

DRAWER ASSEMBLY STEPS 60A-60B

- REPEAT STEP 61A TO INSTALL REMAINING THREE DRAWERS.

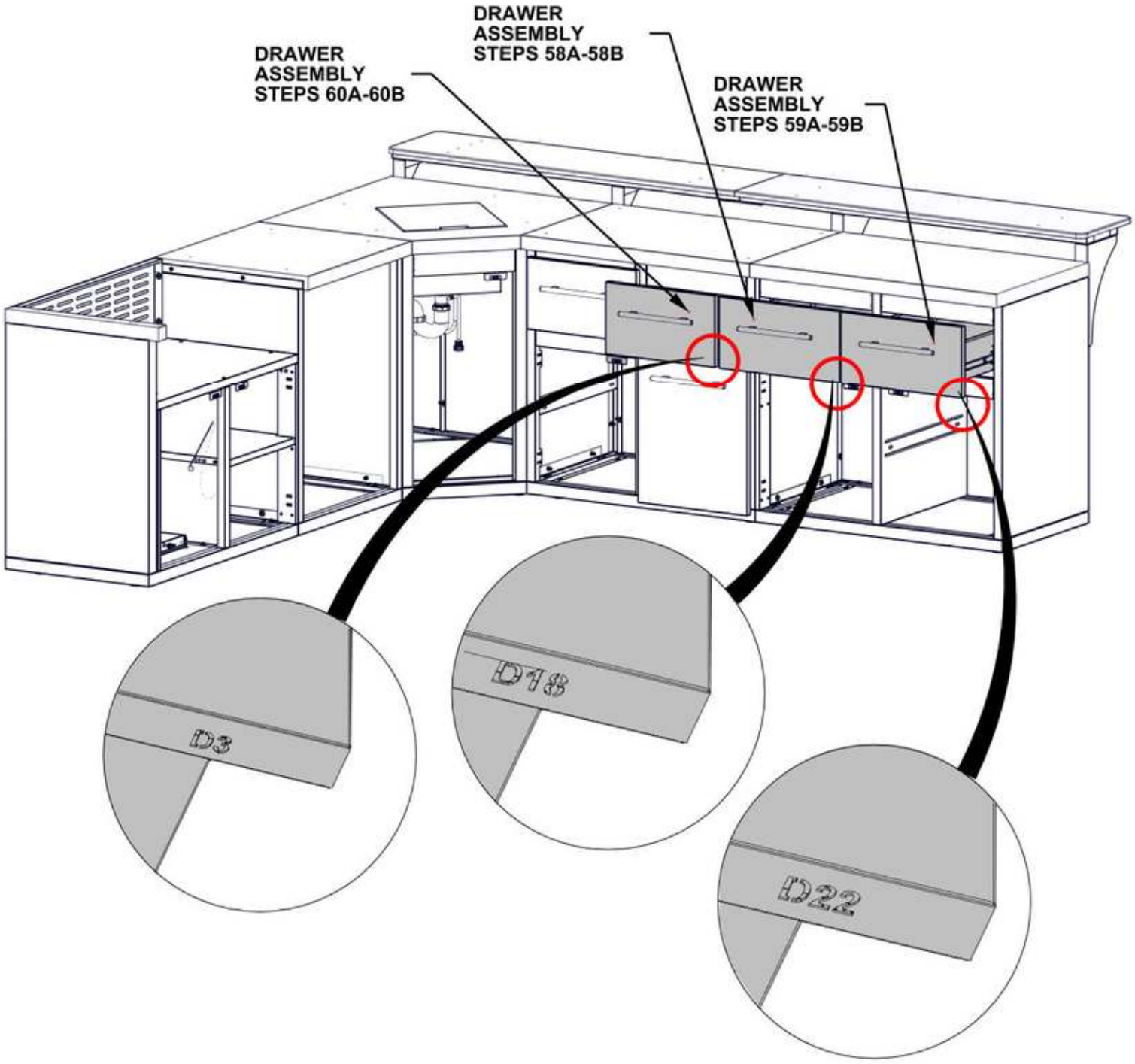

STEP 62A - CABINET SHELF ASSEMBLY

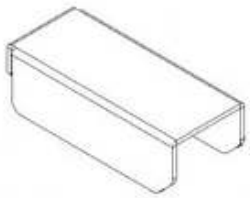

A5 SHELF BRACKET - A4M03141
(x12) 5/8"x7/8"x2 1/16" (16x22x53)

- ATTACH SHELF BRACKETS ON BOTH SIDES OF CENTER CABINET.

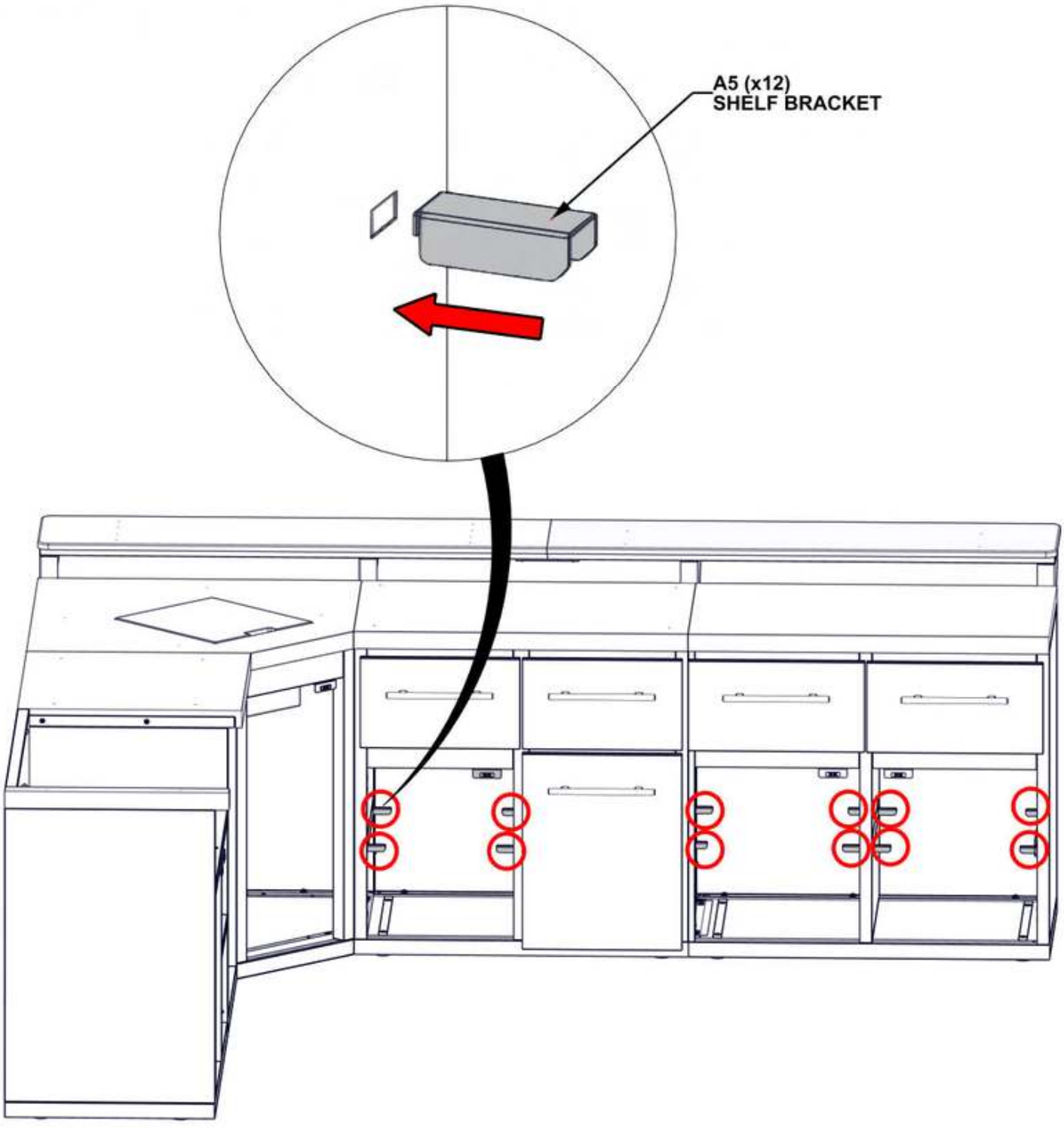

STEP 62B - CABINET SHELF ASSEMBLY



L8 SHELF - A4M05644
(x1) 23 1/4"x16 1/4"x1" (25x412x591)

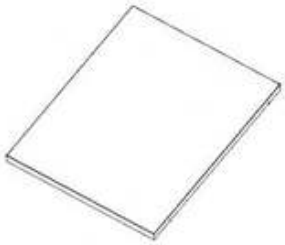

L9 SHELF - A4M05645
(x1) 23 1/4"x18 1/4"x1" (25x463x591)



L10 SHELF - A4M05646
(x1) 23 1/4"x19"x1" (25x482x591)

- PUT SHELFS ON THE SHELF BRACKETS.

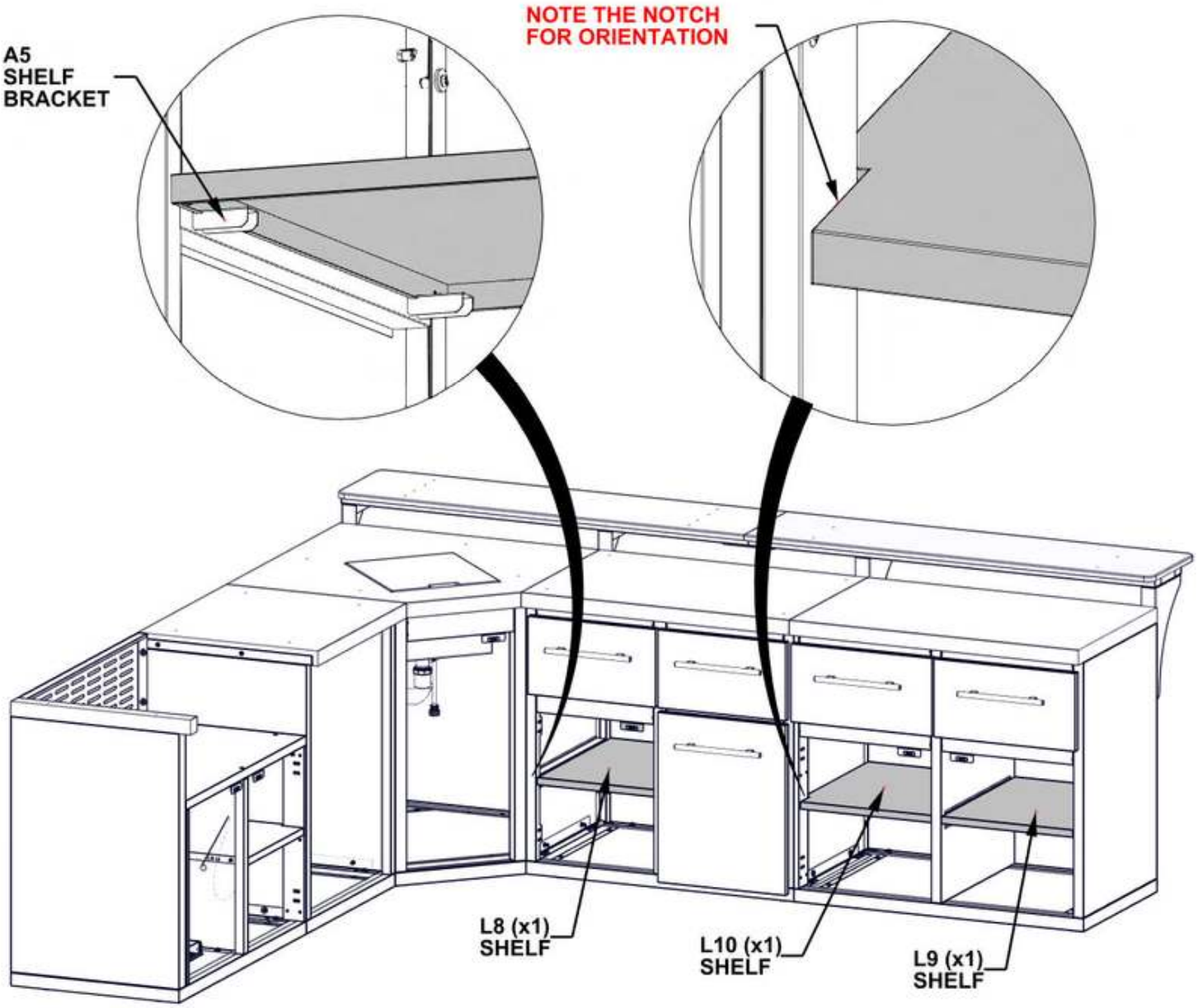

STEP 63A - DOOR ASSEMBLY

Qty	PartNo	Description
24	H101185	PHILLIPS FLAT HEAD 8-32x.5 SCREW



D20 DOOR PANEL ASSEMBLY L - A4M03701
(x1) 22 1/4"x19 5/8"x15/16" (24x498.28x565.50)



D21 DOOR PANEL ASSEMBLY R - A4M03703
(x1) 22 1/4"x19 5/8"x15/16" (24x498.26x565.50)



D6 CABINET DOOR ASSEMBLY L - A4M03577
(x1) 22 1/4"x17 13/16"x15/16" (24x452x565)



A4M03025 FULL OVERLAY HINGE
(x12)



D7 CABINET DOOR ASSEMBLY L - A4M03587
(x1) 24 13/16"x19 1/16"x15/16" (24x484.15x630)



D8 CABINET DOOR ASSEMBLY R - A4M03590
(x1) 24 13/16"x19 1/16"x15/16" (24x484.15x630)



D23 CABINET FRONT DOOR ASSEMBLY - A4M04720
(x1) 33 1/16"x16 1/16"x15/16" (24x408x840)

- INSTALL CABINET HINGES TO ALL DOORS.
- DO NOT OVERTIGHTEN HARDWARE.
- REPEAT FOR ALL DOOR ASSEMBLIES IN THIS STEP.

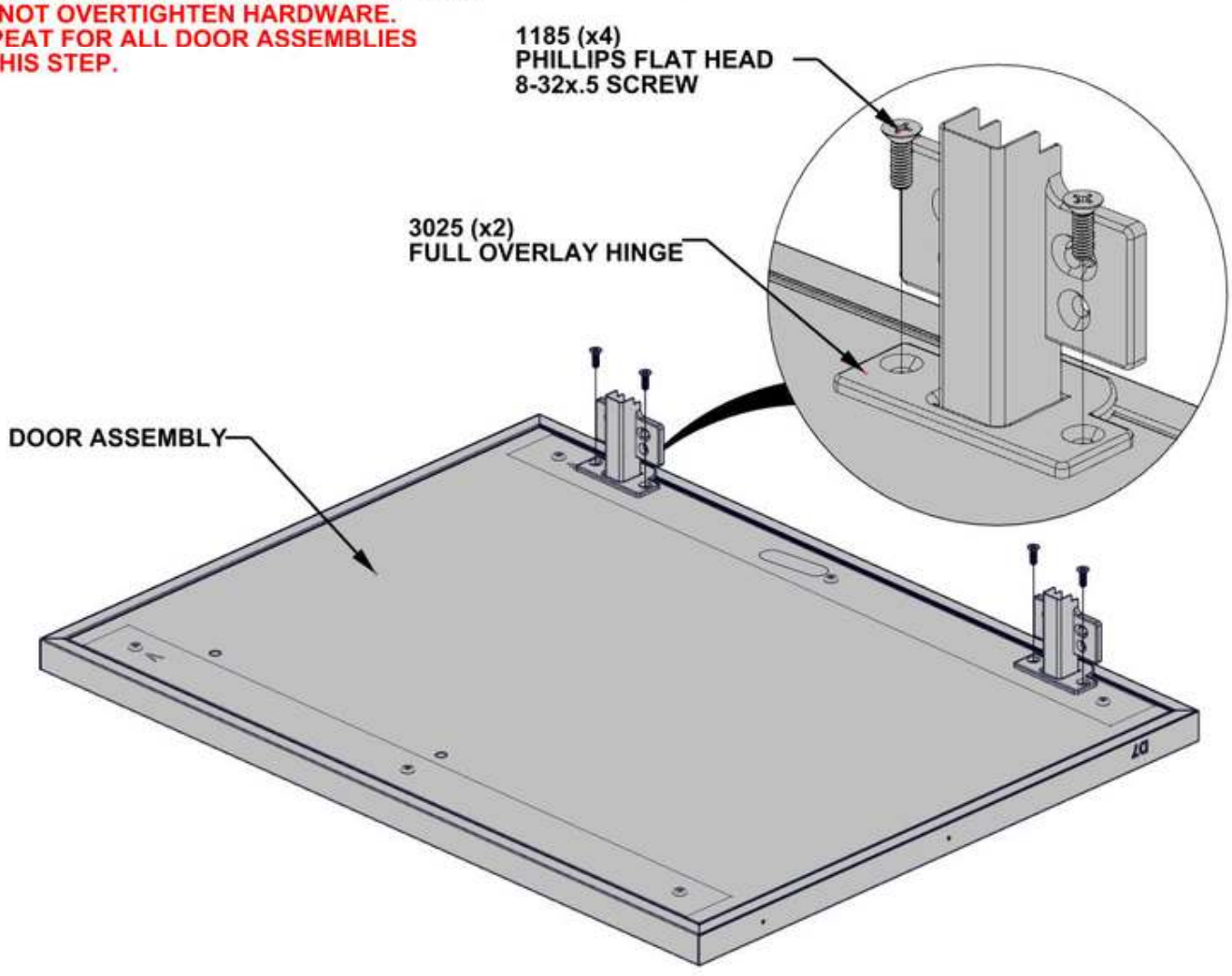

STEP 63B - DOOR ASSEMBLY

Qty	PartNo	Description
12	H101307	SHOULDER BOLT 8-32x30mm SS

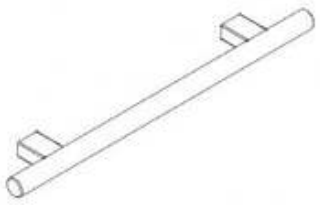

H2 STAINLESS STEEL HANDLE - A4M03024
(x6) 5/8"x1 9/16"x11 13/16" (16x40x300)

- INSTALL CABINET HANDLES TO ALL DOORS.
- REPEAT THIS STEP 6 TIMES.

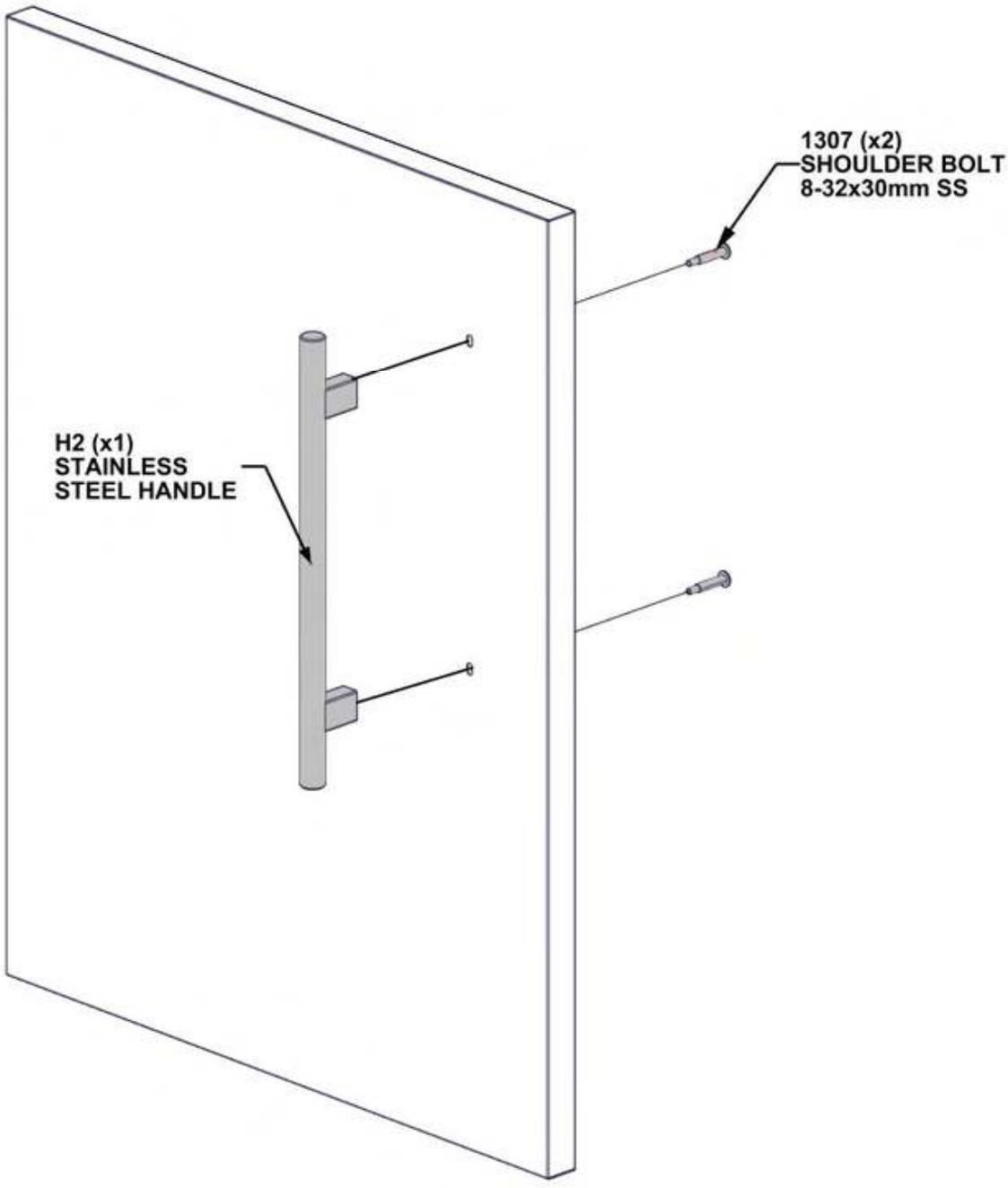

STEP 64 - CABINET DOOR ATTACHMENT

Qty	PartNo	Description
8	H101185	PHILLIPS FLAT HEAD 8-32x.5 SCREW



D7 CABINET DOOR ASSEMBLY L - A4M03587
(x1) 24 13/16"x19 1/16"x15/16" (24x484.15x630)

- FOR THIS STEP IT IS HELPFUL TO HAVE AN ADDITIONAL PERSON HELP HOLD DOOR IN PLACE.
- WITH CABINET HINGES ATTACHED TO DOOR, ALIGN HOLES IN HINGE BRACKET WITH THREADED INSERTS IN SIDE OF CABINET PANEL.

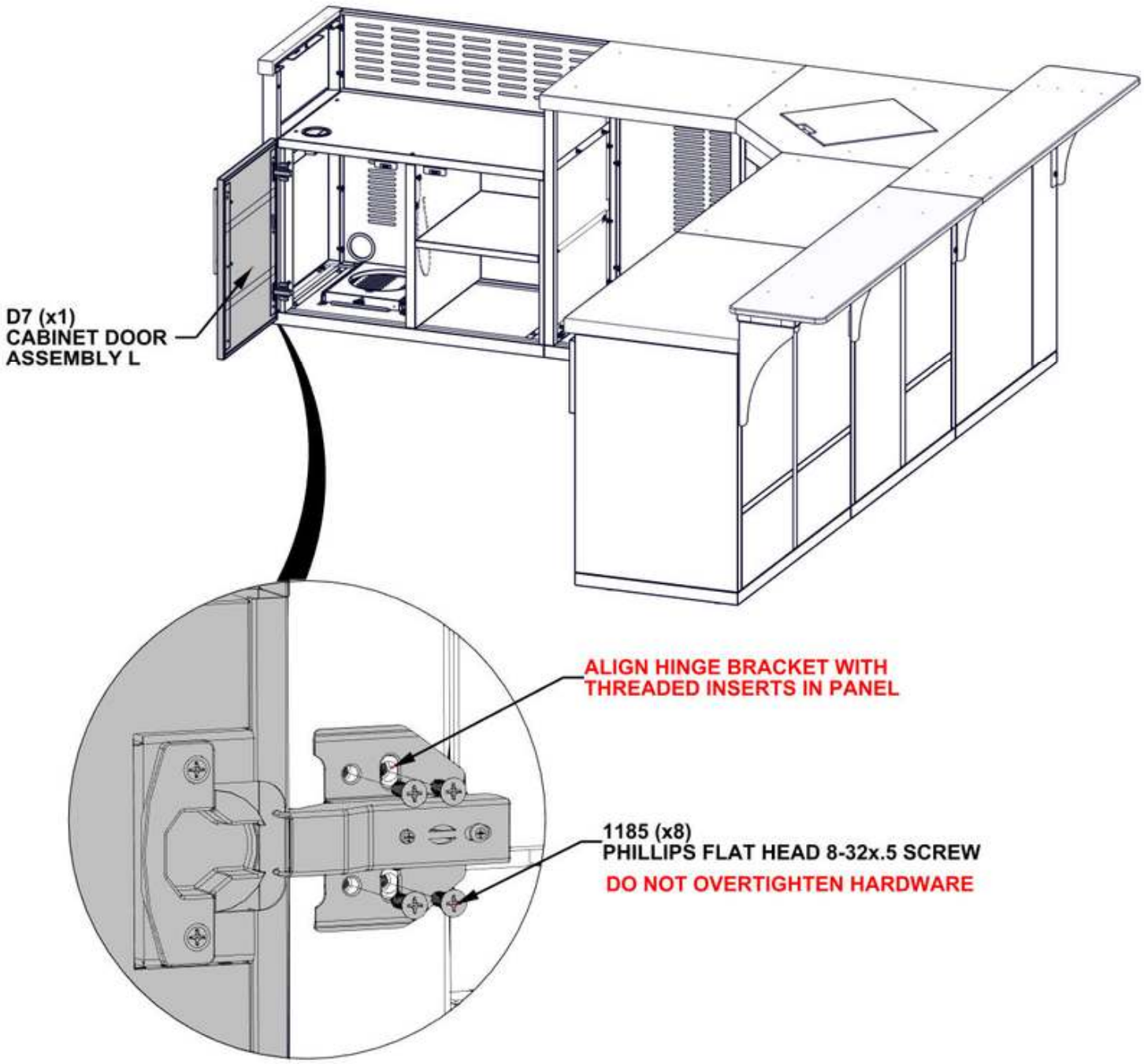

STEP 65 - CABINET DOOR ATTACHMENT

Qty	PartNo	Description
8	H101185	PHILLIPS FLAT HEAD 8-32x.5 SCREW



D8 CABINET DOOR ASSEMBLY R - A4M03590
(x1) 24 13/16"x19 1/16"x15/16" (24x484.15x630)

- FOR THIS STEP IT IS HELPFUL TO HAVE AN ADDITIONAL PERSON HELP HOLD DOOR IN PLACE.
- WITH CABINET HINGES ATTACHED TO DOOR, ALIGN HOLES IN HINGE BRACKET WITH THREADED INSERTS IN SIDE OF CABINET PANEL.

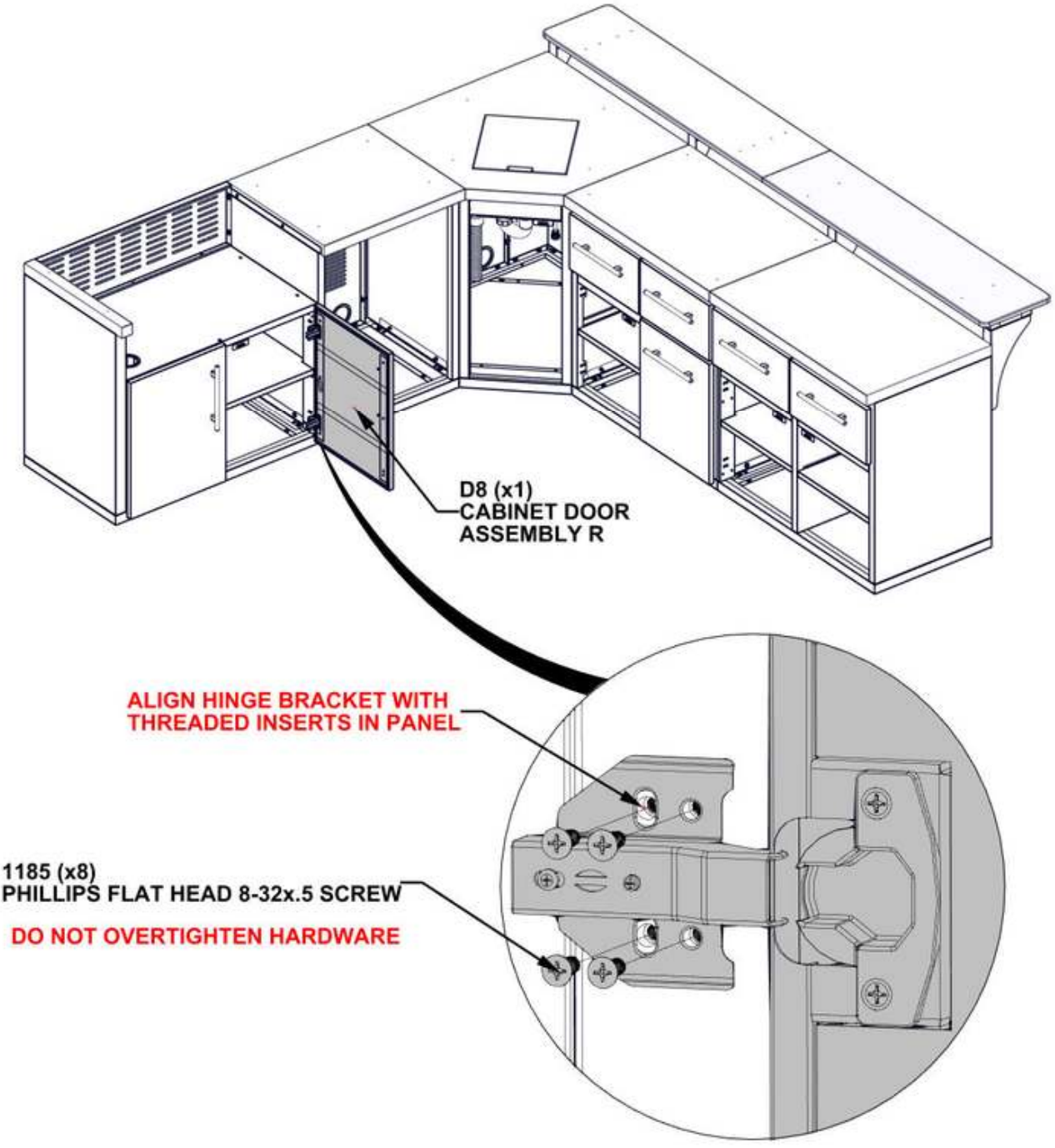

STEP 66 - CABINET DOOR ATTACHMENT

Qty	PartNo	Description
8	H101185	PHILLIPS FLAT HEAD 8-32x.5 SCREW



D23 CABINET FRONT DOOR ASSEMBLY - A4M04720
(x1) 33 1/16"x16 1/16"x15/16" (24x408x840)

- FOR THIS STEP IT IS HELPFUL TO HAVE AN ADDITIONAL PERSON HELP HOLD DOOR IN PLACE.
- WITH CABINET HINGES ATTACHED TO DOOR, ALIGN HOLES IN HINGE BRACKET WITH THREADED INSERTS IN SIDE OF CABINET PANEL.

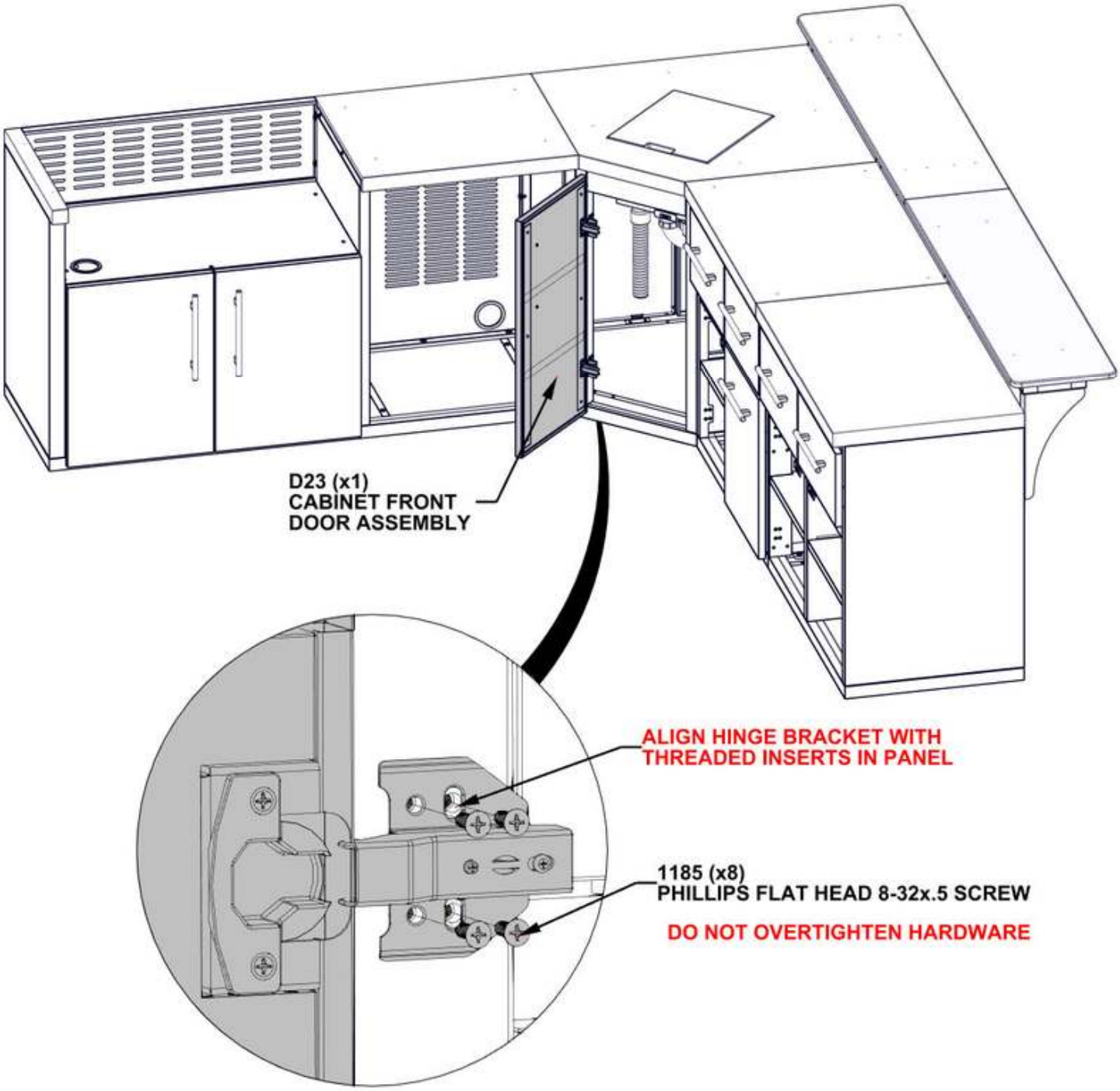

STEP 67 - CABINET DOOR ATTACHMENT

Qty	PartNo	Description
8	H101185	PHILLIPS FLAT HEAD 8-32x.5 SCREW



D6 CABINET DOOR ASSEMBLY L - A4M03577
(x1) 22 1/4"x17 13/16"x15/16" (24x452x565)

- FOR THIS STEP IT IS HELPFUL TO HAVE AN ADDITIONAL PERSON HELP HOLD DOOR IN PLACE.
- WITH CABINET HINGES ATTACHED TO DOOR, ALIGN HOLES IN HINGE BRACKET WITH THREADED INSERTS IN SIDE OF CABINET PANEL.

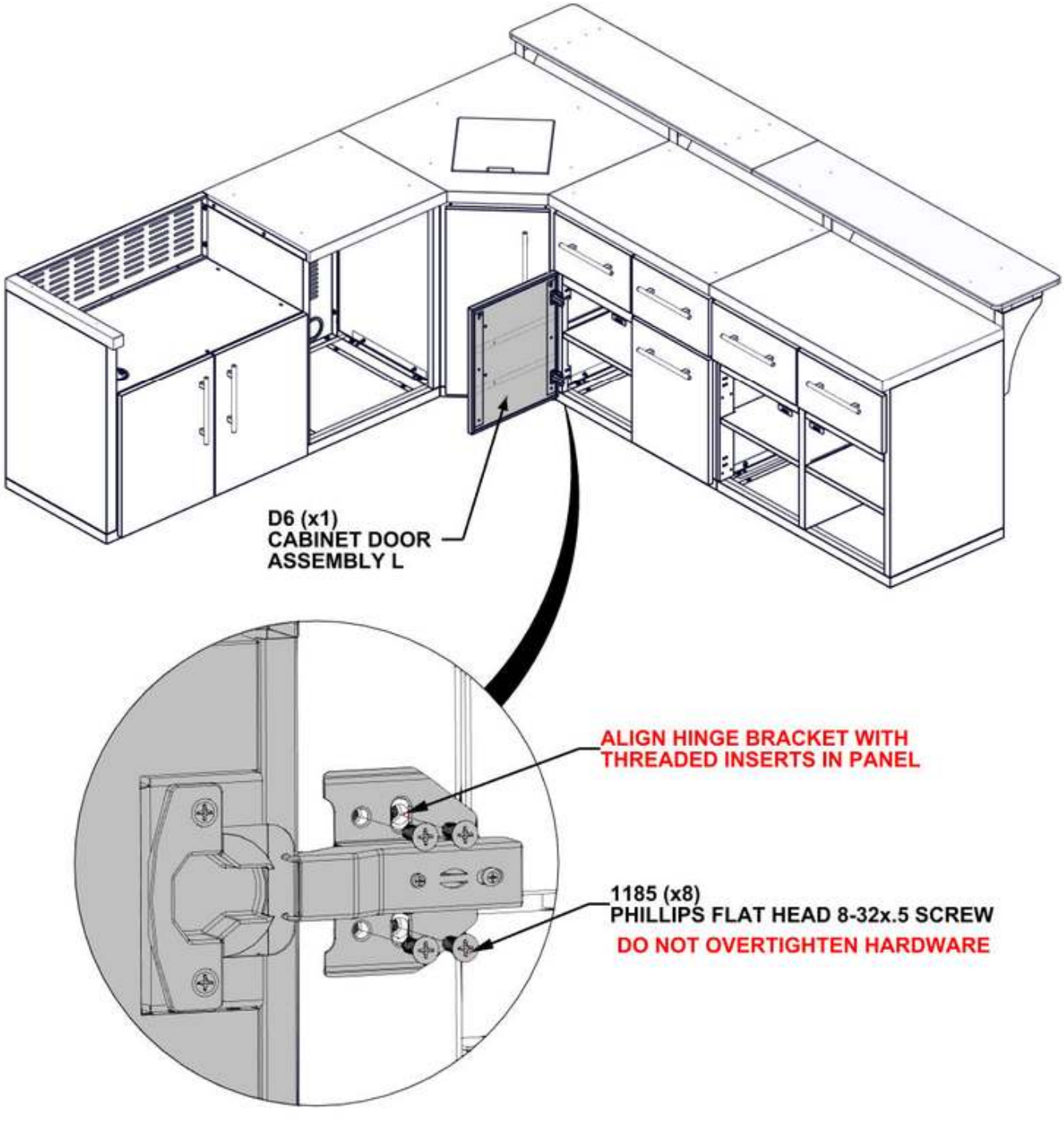

STEP 68 - CABINET DOOR ATTACHMENT

Qty	PartNo	Description
8	H101185	PHILLIPS FLAT HEAD 8-32x.5 SCREW

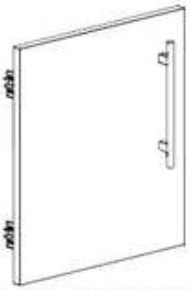

D20 (x1) DOOR PANEL ASSEMBLY L - A4M03701
22 1/4"x19 5/8"x15/16" (24x498.28x565.50)

- FOR THIS STEP IT IS HELPFUL TO HAVE AN ADDITIONAL PERSON HELP HOLD DOOR IN PLACE.
- WITH CABINET HINGES ATTACHED TO DOOR, ALIGN HOLES IN HINGE BRACKET WITH THREADED INSERTS IN SIDE OF CABINET PANEL.

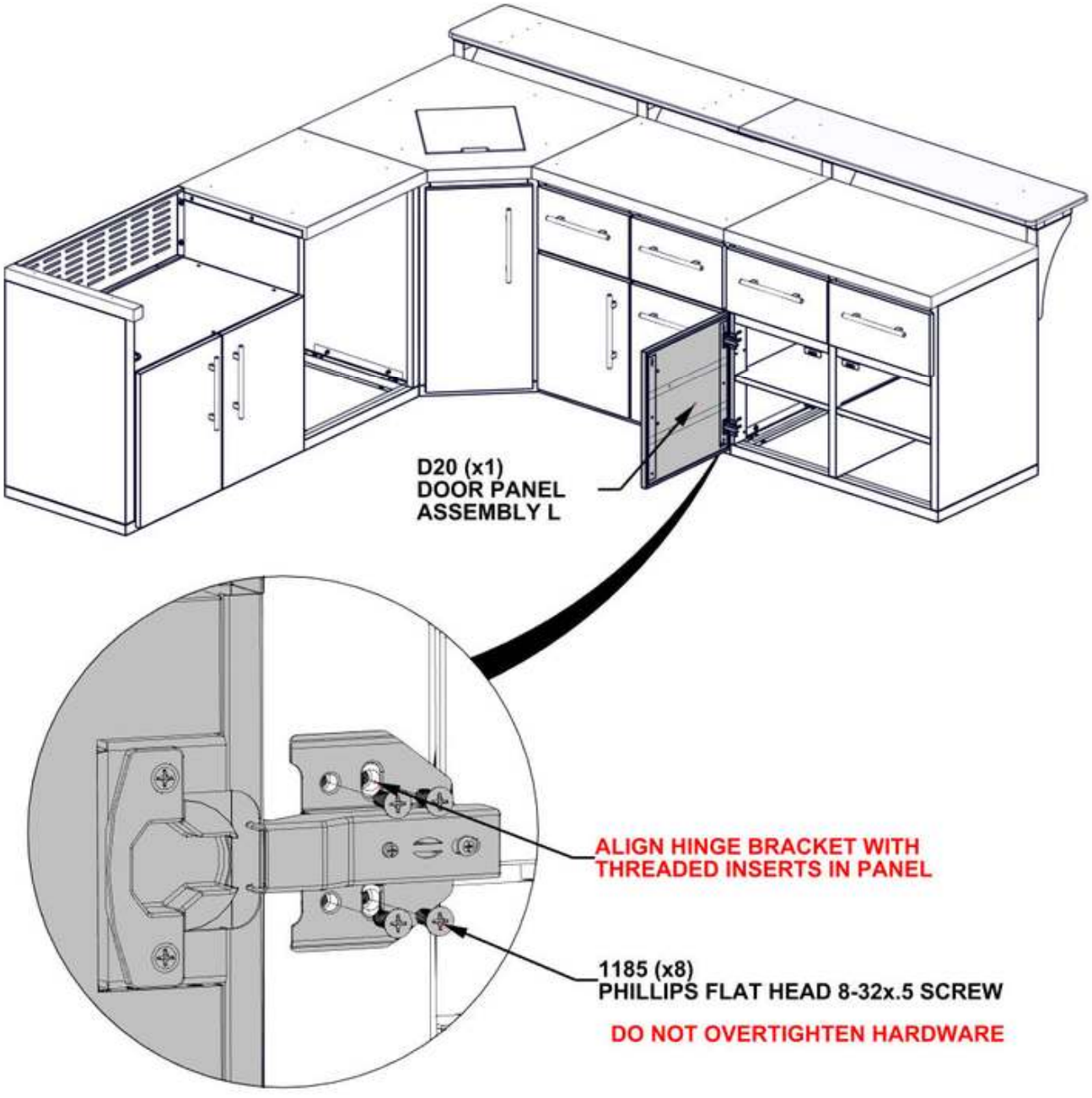

STEP 69 - CABINET DOOR ATTACHMENT

Qty	PartNo	Description
8	H101185	PHILLIPS FLAT HEAD 8-32x.5 SCREW

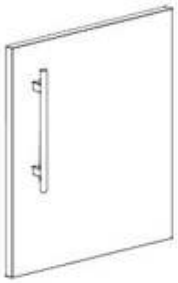

D21 (x1) DOOR PANEL ASSEMBLY R - A4M03703
22 1/4"x19 5/8"x15/16" (24x498.26x565.50)

- FOR THIS STEP IT IS HELPFUL TO HAVE AN ADDITIONAL PERSON HELP HOLD DOOR IN PLACE.
- WITH CABINET HINGES ATTACHED TO DOOR, ALIGN HOLES IN HINGE BRACKET WITH THREADED INSERTS IN SIDE OF CABINET PANEL.

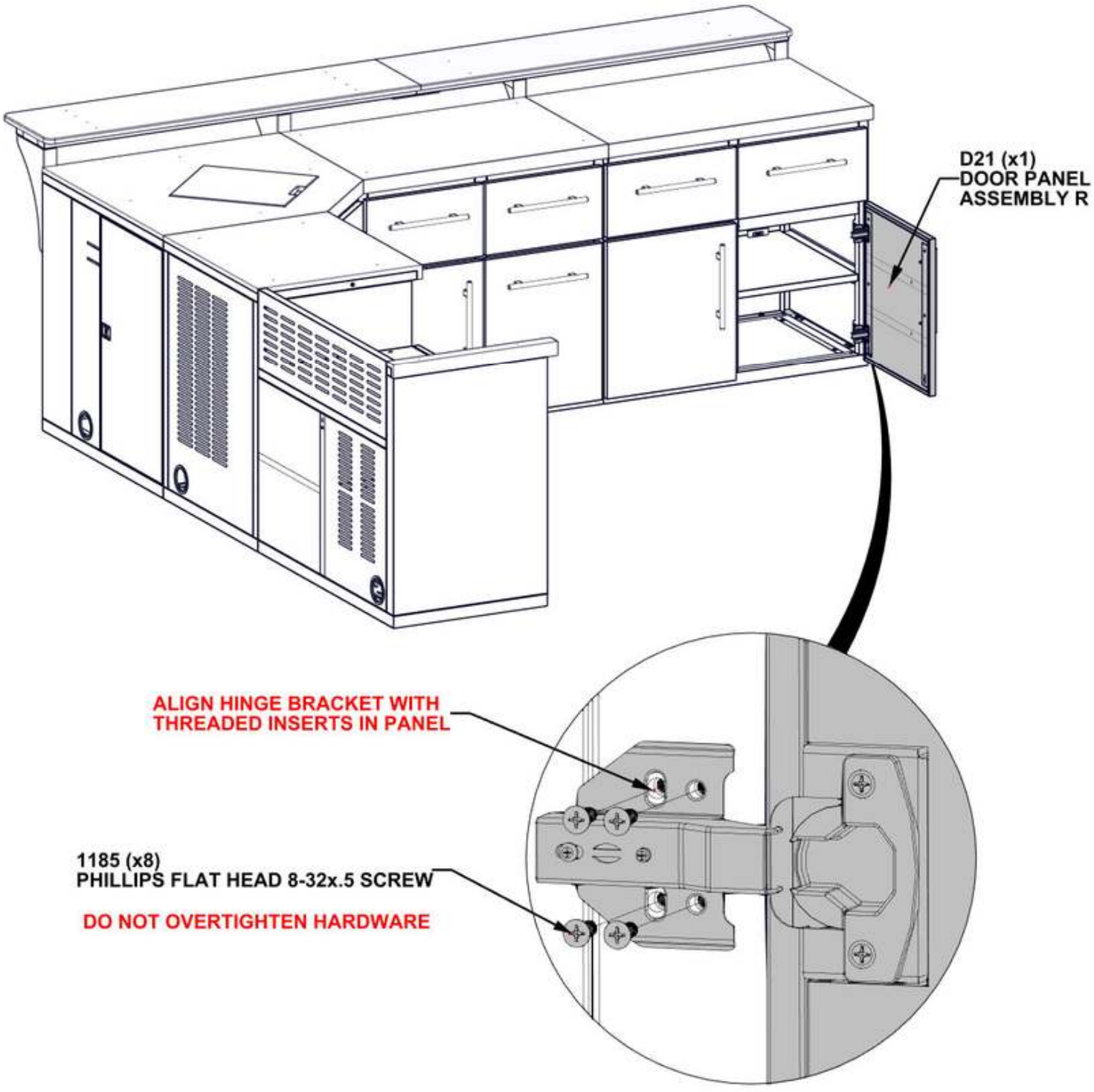

STEP 70 - CABINET DOOR ADJUSTMENT (AS NEEDED)

- ADJUST HINGES (AS NEEDED) SO THAT THE GAP AROUND ALL DOORS IS THE SAME AND THERE IS NO INTERFERENCE BETWEEN DOORS AND CABINETS.
- ADJUST MAGNET CATCH BRACKETS AS NEEDED.

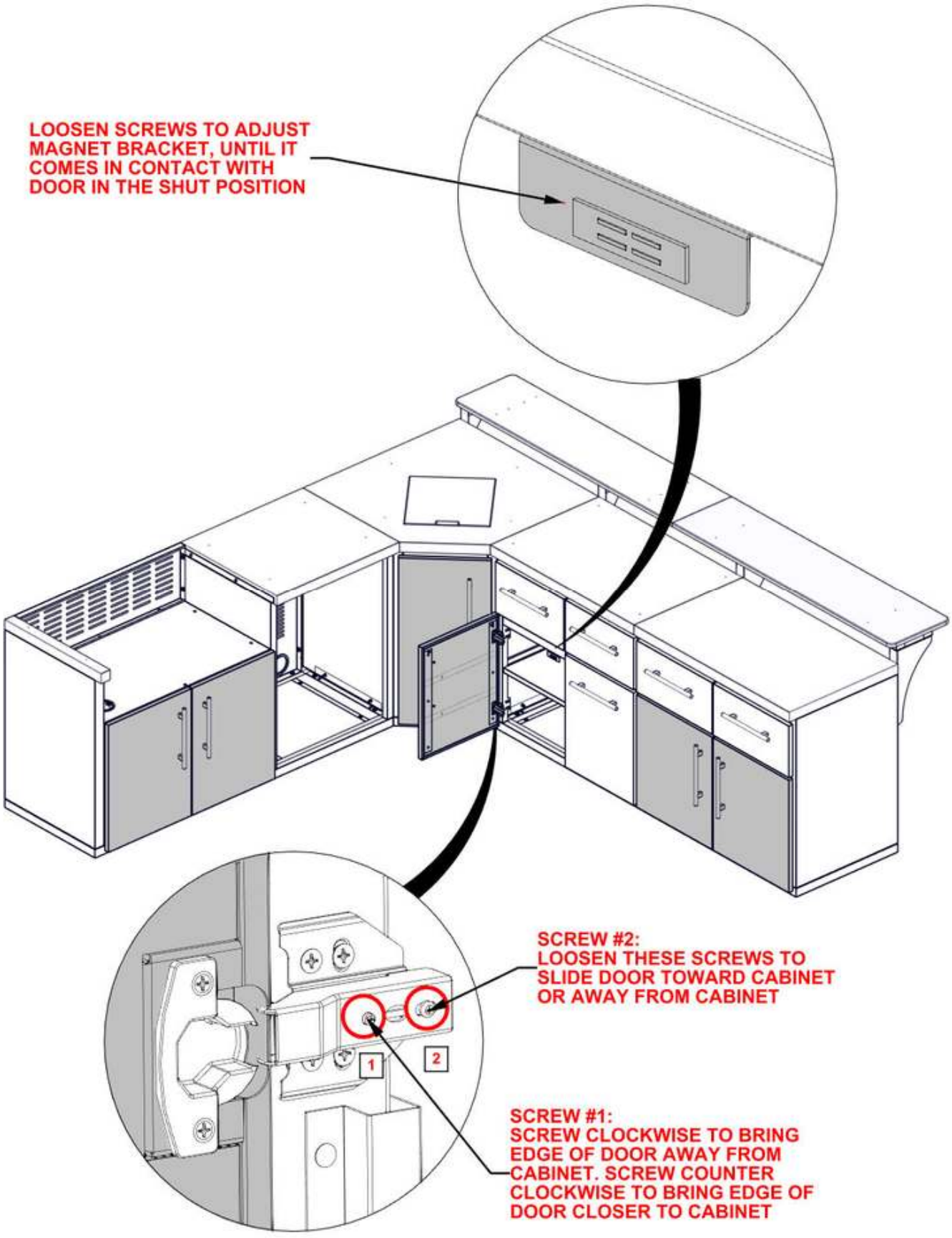

STEP 71 - KITCHEN ACCESSORY

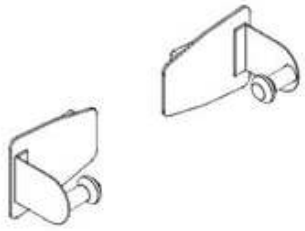

A4M02290 MAGNETIC PAPER TOWEL HOLDER
(x1)

- MAGNETIC PAPER TOWEL HOLDER CAN BE ATTACHED TO ANY METAL SURFACE ON KITCHEN.
- WE RECOMMEND ATTACHING TO THE INSIDE OF CABINET DOOR.
- MAKE SURE TO KEEP PAPER TOWEL HOLDER AT A SAFE DISTANCE FROM GRILLING SURFACE.

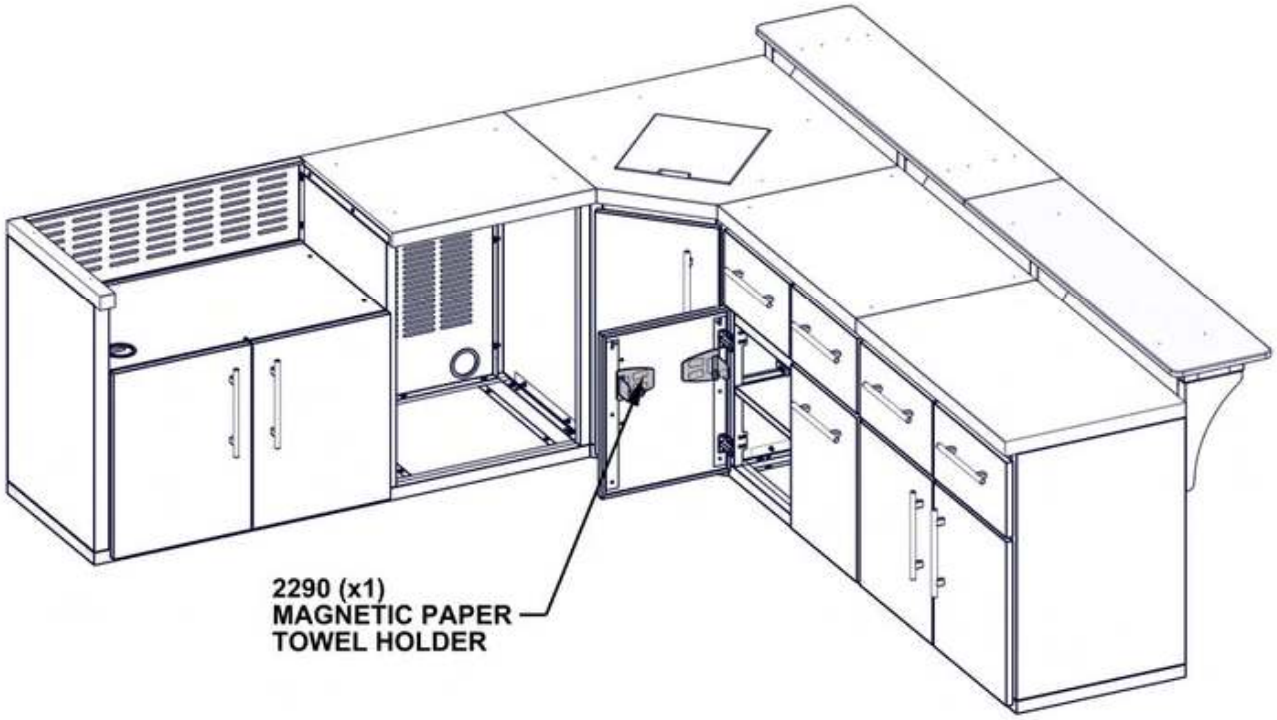

OUTDOOR KITCHEN FRIDGE

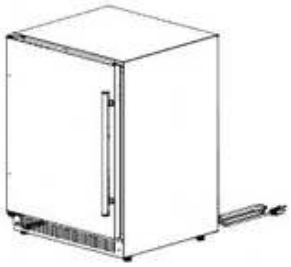

9230132 OUTDOOR KITCHEN FRIDGE - LEFT OPEN
(x1)

- FOR INSTALLATION OF OUTDOOR KITCHEN FRIDGE, REFER TO PAGES IN THIS INSTRUCTION MANUAL.
- FOR DETAILED INFORMATION OF OUTDOOR KITCHEN FRIDGE, REFER TO ASSEMBLY INSTRUCTIONS THAT COME PACKAGED WITH THE OUTDOOR KITCHEN FRIDGE.
- FOLLOW DIRECTIONS FOR PROPER CARE AND USE.

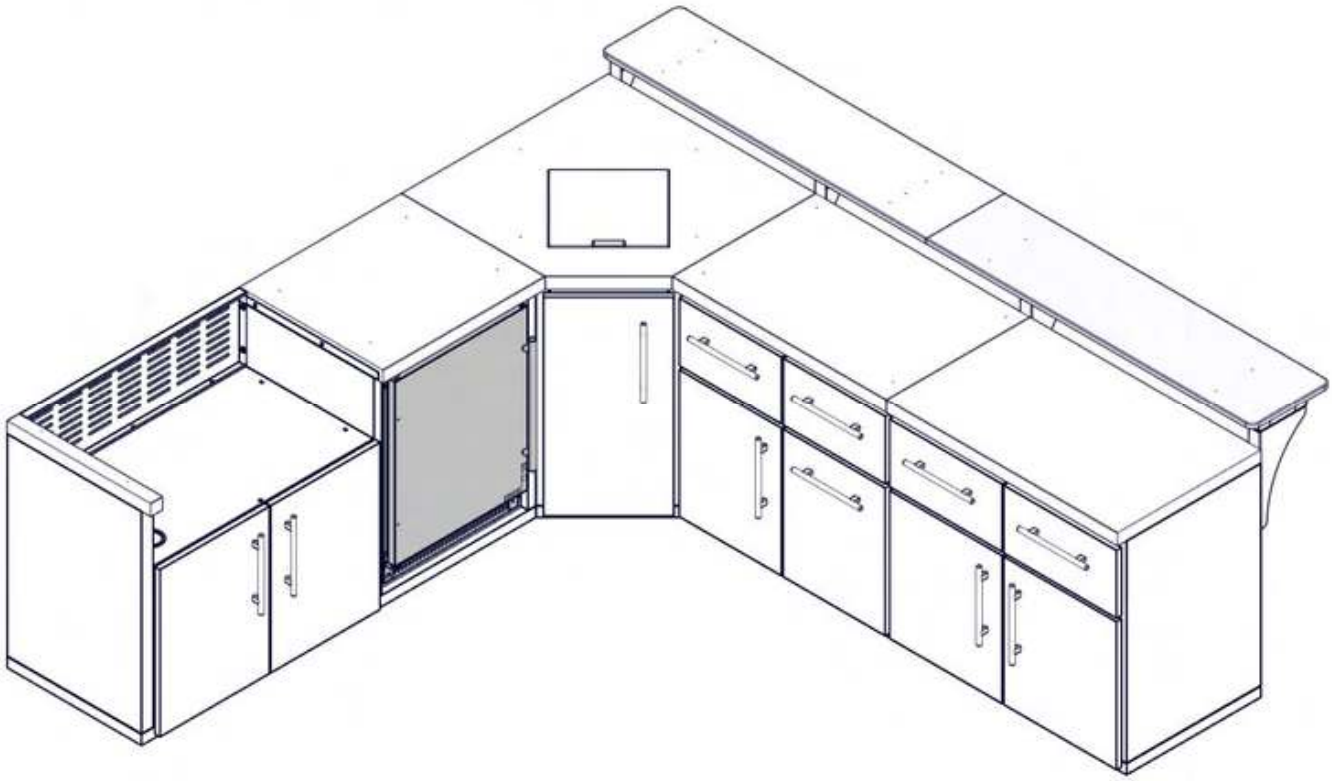

OUTDOOR KITCHEN FRIDGE

- CAREFULLY SLIDE FRIDGE INTO CABINET OPENING MAKING SURE THAT THE ELECTRICAL CORD IS ROUTED THROUGH THE HOLES IN THE BACK PANELS OF THE CABINET.
- IF FRIDGE IS NOT IN UPRIGHT POSITION, PLEASE LET SIT FOR 24 HRS BEFORE PLUGGING INTO RECEPTACLE.
- FRIDGE CANNOT BE CONNECTED TO ELECTRICAL ENCLOSURE ATTACHED TO OUTDOOR STRUCTURE.

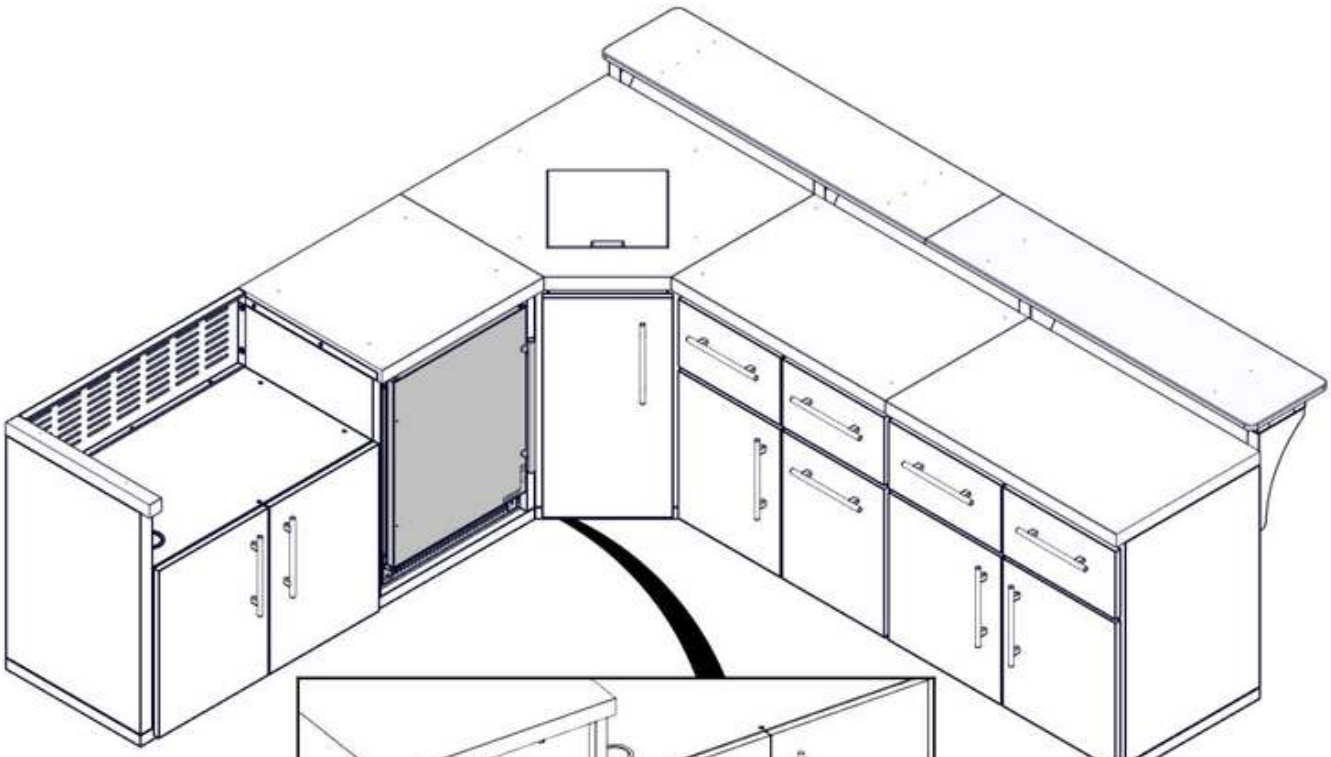

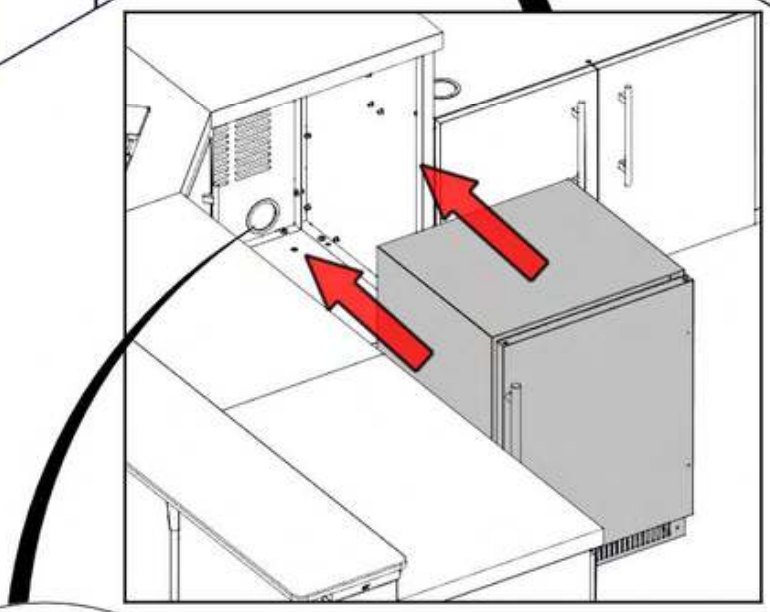

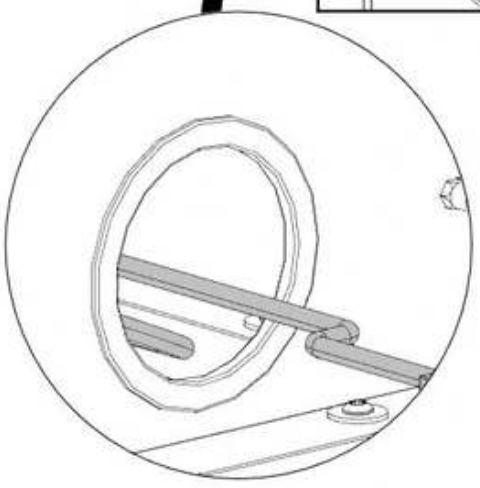

OUTDOOR KITCHEN FRIDGE

- ALIGN FEET ON FRIDGE UNIT SO THAT IT IS LEVEL AND DOES NOT TILT.
- TURN FEET CLOCKWISE TO EXTEND THEM AND COUNTERCLOCKWISE TO SHORTEN. REPEAT THIS FOR ALL FOUR FRIDGE FEET AS NEEDED TO LEVEL.

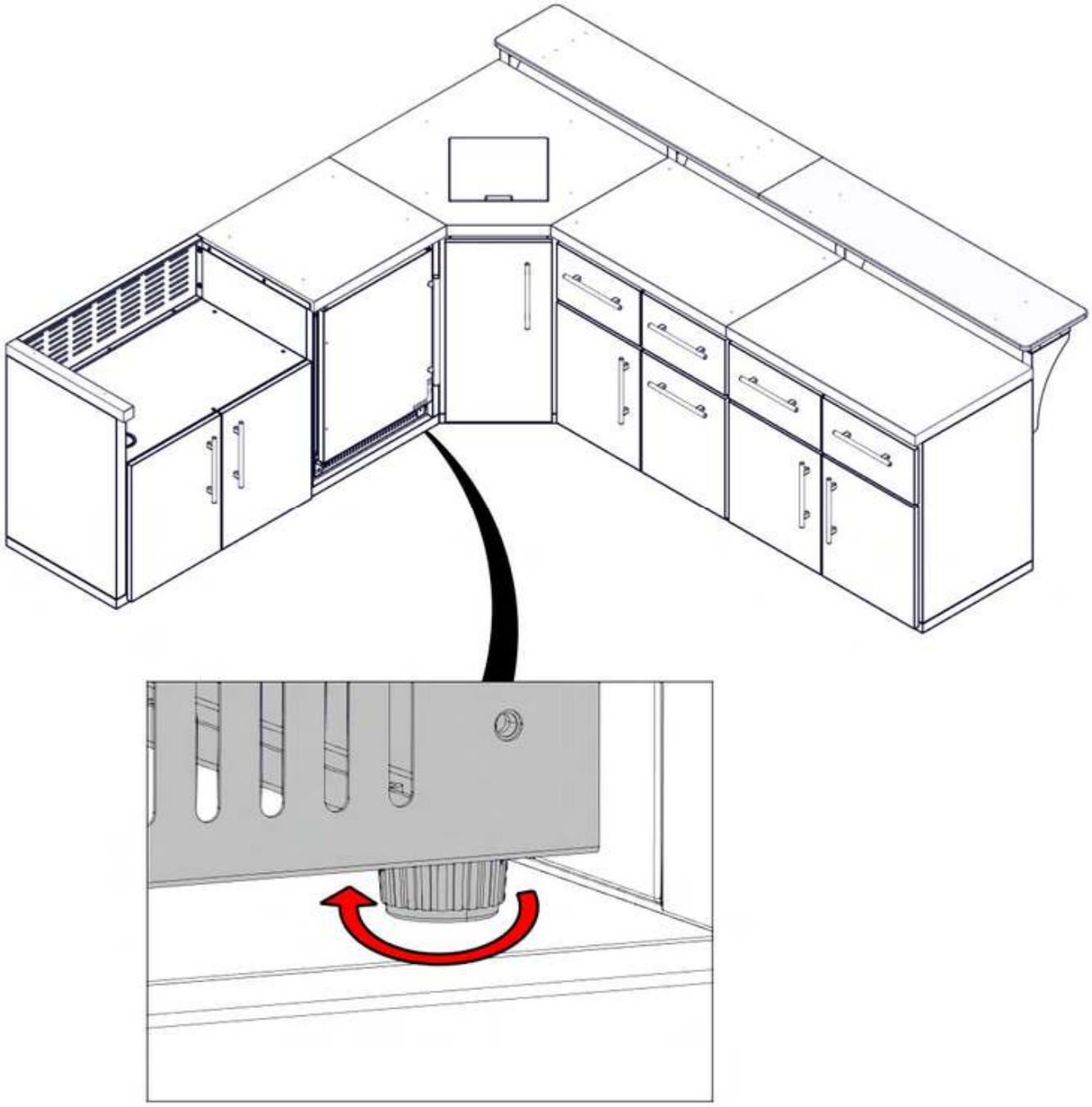

FOR APPLIANCE INSTALLATION, REFER TO ASSEMBLY INSTRUCTIONS THAT COME PACKAGED WITH EACH INDIVIDUAL APPLIANCE. FOLLOW DIRECTIONS FOR PROPER INSTALLATION.

OUTDOOR KITCHEN APPLIANCE COVER INSTALLATION

- APPLIANCE COVERS WILL COME PACKAGED WITH EACH RESPECITVE APPLIANCE.
- CABINET COVER WILL HAVE CUTOUTS FOR EACH APPLIANCE LOCATION.

- INSTALL CABINET COVER OVER FULLY ASSEMBLED KITCHEN PACKAGE.
  NOTE: COVER SHOULD GO ON AFTER APPLIANCES ARE INSTALLED.
- INSTALL INDIVIDUAL APPLIANCE COVERS OVER EACH APPLIANCE, MAKING SURE FLAPS ARE ON THE OUTSIDE OF THE CABINET COVER, AND VELCRO STRIPS ARE FIRMLY CONNECTED.

