KINGSTON

Double Toilet Roll Holder

Installation Instructions

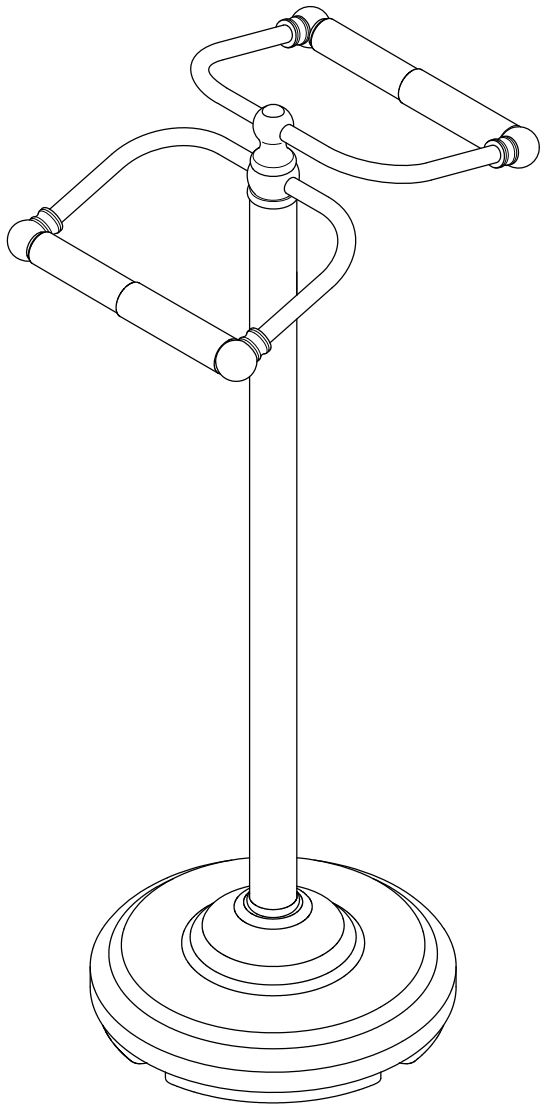

www.kingstonbrass.com

TOLL-FREE CUSTOMER SERVICE: 1-877-2-KBRASS
TECHNICAL SUPPORT E-mail: service@kingstonbrass.com
12775 Reservoir Street, Chino, CA 91710

Tools Required



Allen Wrench

1

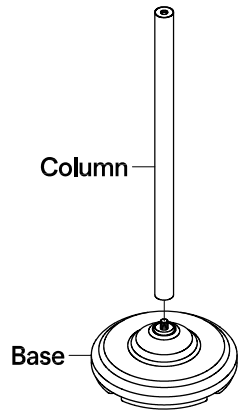

1. Put the base in a level space on ground. Thread one end of column into base tightly with clockwise direction.

2

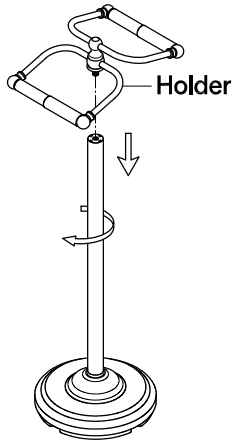

2. Install paper holder into another end of the column tightly with clockwise direction.

3

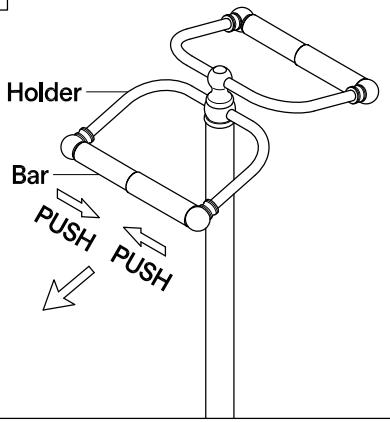

3. Connect the bar by pushing toward center.

4

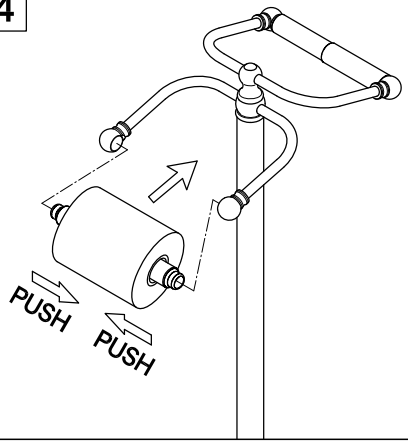

4. Slip the toilet paper into bar and attach the bar to paper holder.

©2025 LVC Kingston LLC. All Rights Reserved.

2025-05-KB

Cleaning

Clean with a damp cloth only.
Avoid using metal or abrasive polishes.