ENVO by ANZZI

ITEM: WH-AZ011-M3
WH-AZ015-M3
WH-AZ018-M3
WH-AZ021-M3
WH-AZ024-M3
WH-AZ027-M3

ANZZI ELECTRIC INSTANT WATER HEATER INSTALLATION & OPERATION MANUAL

V1.5
09/27/2026

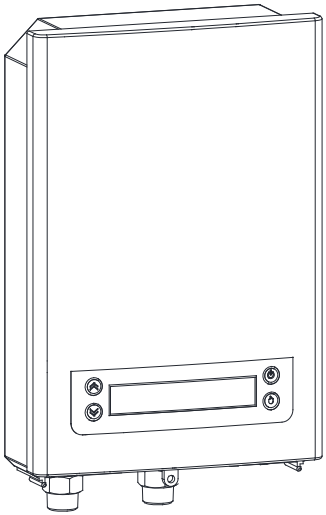

Intertek

LEAD FREE

DON'T WAIT! REGISTER NOW!

Register your product within 90 days to ensure your purchase is recognized and eligible for warranty coverage.

Register online at https://anzzi.com/pages/register or scan the QR code on PG. 2.

ENVO by ANZZI

PRODUCT REGISTRATION*

IMPORTANT: Warranty will not be recognized unless product is registered.

Register online at https://anzzi.com/pages/register or Scan the QR code below.
Registering your product maximizes your warranty benefits and ensures prompt service and support.

1. USE YOUR PHONE CAMERA TO SCAN THE QR CODE
2. FILL IN A QUICK REGISTRATION FORM
3. CLICK SUBMIT AND ENJOY PEACE OF MIND

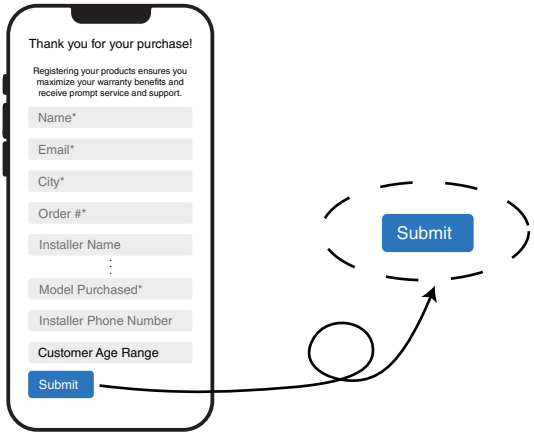

Need help? For technical support call **305-363-4679** or visit us at **www.ANZZI.com**

PRODUCT SIZE CHART

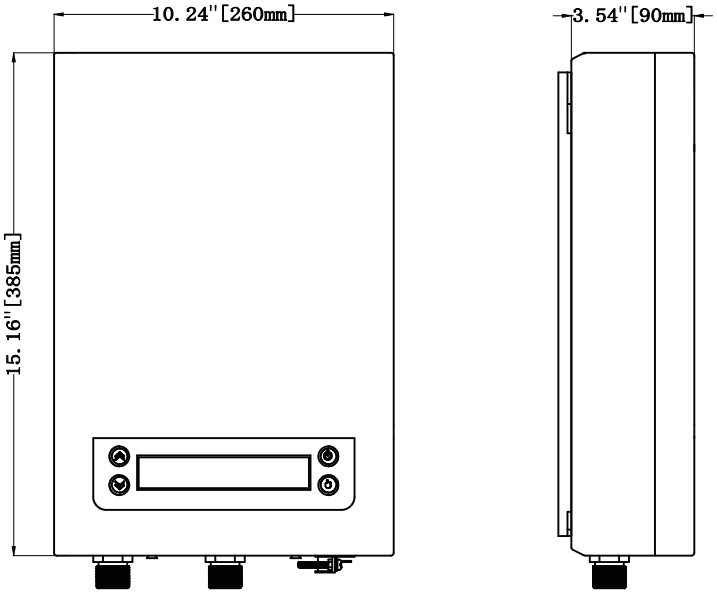

TOOLS AND MATERIALS

Wrench

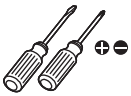

Screwdriver

Tape Measure

Bucket

Sealant Tape

Marker Pen

Drill

Ø1/4"
(6mm)
Drill bit

Thank you for purchasing ENVO ELECTRIC INSTANT WATER HEATER. To enjoy your hot water life at its best, please read and follow the installation and operation instructions carefully, to ensure the long life and reliable operation of this appliance. FAILURE TO DO SO COULD CAUSE PROPERTY DAMAGE, SERIOUS INJURY, OR DEATH. Please keep this manual for future reference.

TABLE OF CONTENTS

Safety Precautions ---------- PG.4

Electrical Diagram ---------- PG.7

Product Inner Structure ---------- PG.8

Product Specifications ---------- PG.10

Installation Guideline ---------- PG.10

Installation ---------- PG.12

Operation Instructions ---------- PG.18

Cleaning & Maintenance ---------- PG.18

Trouble-Shooting ---------- PG.19

Packing List ---------- PG.19

SAFETY PRECAUTIONS

⚠ WARNING

When using electrical appliances, basic safety precautions should always be followed including the following:

- The installation must be in compliance with the National Electrical Code, your local electrical and plumbing codes.
- This appliance must be **GROUNDED.**
- We highly recommend that you employ the services of a professional to assist you with this installation if you are not familiar with basic plumbing and electricity. Under no circumstances should you attempt to install, repair or disassemble the water heater without first disconnecting the electricity.
- Install or locate this water heater only in accordance with the provided installation instructions.
- Use this water heater only for its intended use as described in this manual.
- This appliance MUST be permanently connected to the fixed circuit breaker and it must be installed vertically. DO NOT install near tinder or a strong magnetic field.
- SWITCH OFF the breaker before removing the cover for servicing.
- If there is damage to the wire, you must contact qualified electrician to replace it with dedicated wire from our authorized dealers.
- Use stainless steel flexible hoses or copper tubes of 3/4" (except WH-AZ011-M3 is using 1/2" connections) on the inlet and outlet. DO NOT USE PVC, CPVC or plastic supply line directly to the heater.
- This appliance is forbidden to be switched on if you think it may be frozen, as this could result in serious damage to the unit. Wait until you are sure that it has completely thawed out before you switch it on.
- This appliance is not intended for use by persons (include children) with reduced physical sensory or mental capabilities, or lack of experience and knowledge, unless under careful supervision. Children should be supervised to ensure that they do not play with the appliance.
- Safety and energy conservation are factors to be considered when selecting the water temperature setting of water heater's thermostat. Water temperatures above the 125°F (52°C) can cause severe burns from scalding.
- DO NOT store or use gasoline or other flammable vapors and liquids in the vicinity of this or any other appliance. Keep rags and other combustibles away.
- If the water heater has been subjected to flood, fire, or physical damage, turn off power and water to the water heater. Do not operate the water heater again until it has been thoroughly checked by qualified service personnel.

SAFETY PRECAUTIONS

ATTENTION

- It is extremely important to FLUSH the pipes to wash away sundries and residue in the pipes before connecting the water heater to it.

- Risk of Fire - Hydrogen gas can be produced in a hot water system served by this water heater that has not been used for a long period of time(generally two weeks or more). **HYDROGEN GAS IS EXTREMELY FLAMMABLE!!** To dissipate such gas and to reduce risk of injury, it is recommended that the hot water faucet be opened for several minutes at the kitchen sink before using any electrical appliance connected to the hot water system. If hydrogen is present, there will be an unusual sound such as air escaping through the pipe as the water begins to flow. Do not smoke or use an open flame near the faucet at the time it is open.

- Safety regulations require a factory setting no greater than 125°F (52°C) for all new water heaters. Therefore, if your old water heater was set to a hotter temperature than your new water heater with a factory setting of 120°F (49°C), the new water heater may seem to provide lower capacity than your old water heater. This can be corrected by increasing the temperature setting.

- Increasing the water temperature setting may improve the cleaning performance of dishwashers.

- The user can adjust the temperature setting to meet their needs. Always read and understand the safety instructions contained in the manual before adjusting the temperature setting.

- If the water heater is to remain idle for an extended period of time, the power and water to the appliance should be turned off and the water heater drained to conserve energy and prevent a buildup of dangerous hydrogen gas. The water heater and piping should be drained if they might be subjected to freezing temperatures. After a long shutdown period, the water heater's operation and controls should be checked by qualified service personnel. Make certain that water is flowing to water heater again before placing it in operation.

Statement: ENVO does not assume any responsibility for the losses caused by the improper installation and behavior listed above or other improper operations.

CAUTION

FOR HOUSEHOLD AND INDOOR USE ONLY.

SAVE THIS INSTRUCTION

ELECTRICAL DIAGRAM

MODEL: WH-AZ011-M3

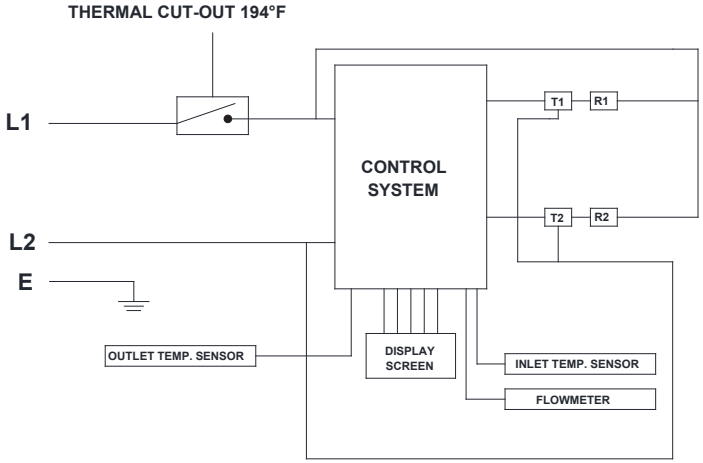

REMARK: R:HEATING SYSTEM T:TRIAC

MODEL: WH-AZ015-M3/ WH-AZ018-M3

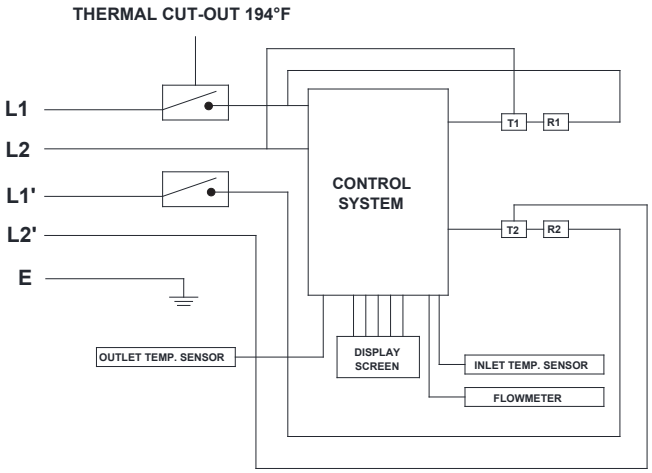

REMARK: R:HEATING SYSTEM T:TRIAC

ELECTRICAL DIAGRAM

MODEL: WH-AZ021-M3/ WH-AZ024-M3/ WH-AZ027-M3

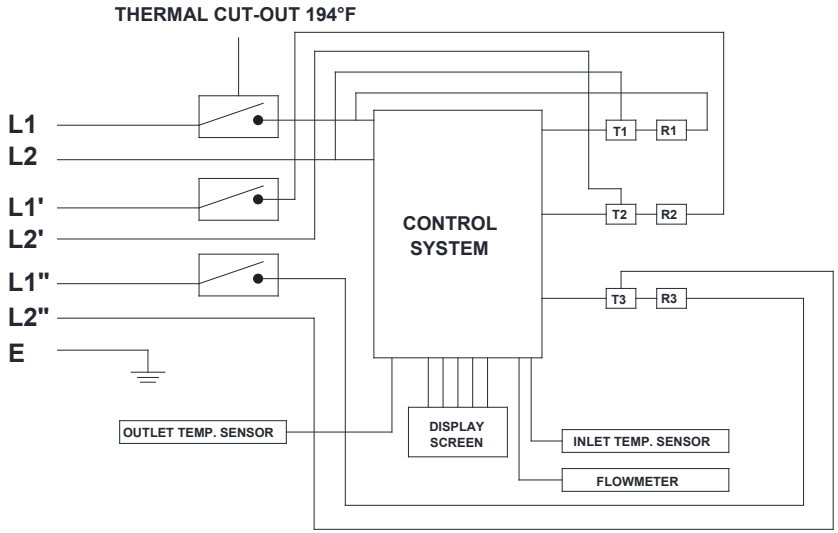

REMARK: R:HEATING SYSTEM T:TRIAC

PRODUCT INNER STRUCTURE

MODEL: WH-AZ011-M3

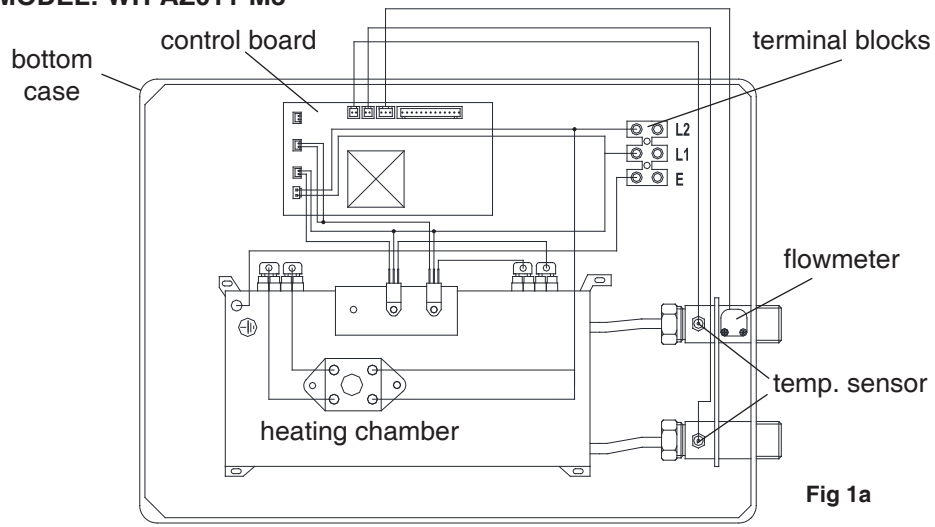

Fig 1a

PRODUCT INNER STRUCTURE

MODEL: WH-AZ015-M3/ WH-AZ018-M3

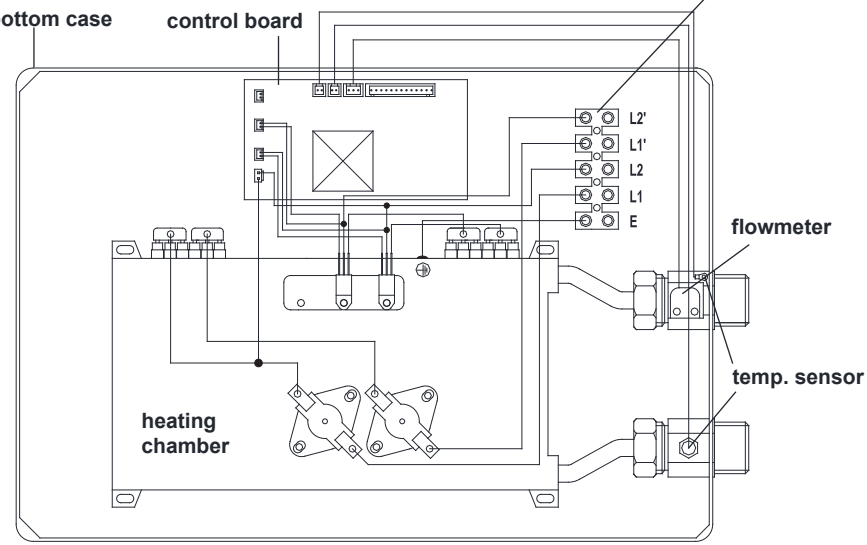

Fig 1b

MODEL: WH-AZ021-M3/ WH-AZ024-M3/ WH-AZ027-M3

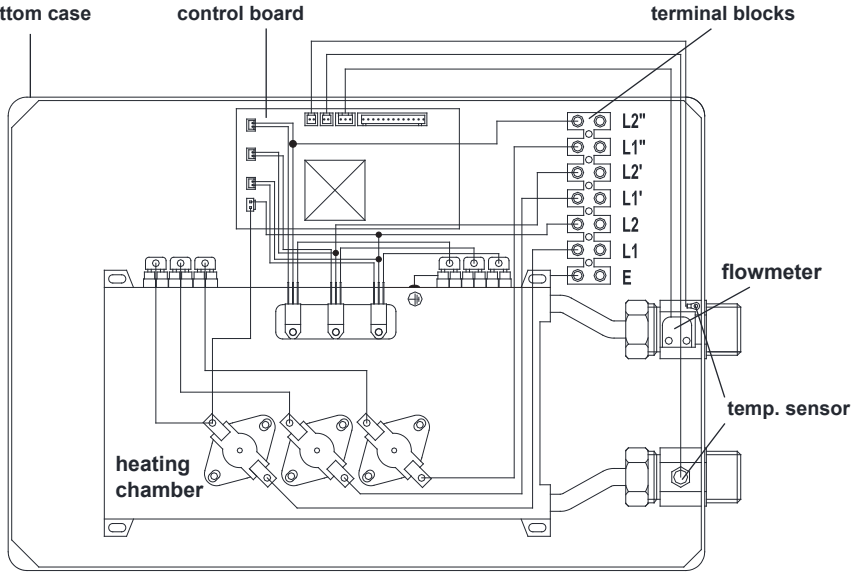

Fig 1c

PRODUCT SPECIFICATIONS

Model	WH-AZ011-M3	WH-AZ015-M3	WH-AZ018-M3	WH-AZ021-M3	WH-AZ024-M3	WH-AZ027-M3
Voltage	240V	240V	240V	240V	240V	240V
Wattage	11000W	15000W	18000W	21000W	24000W	27000W
Rated Current	45.83A	62.5A	75A	87.5A	100A	112.5A
Recommended Double - Pole Circuit Breaker	50A	2x35A	2×40A	3×30A	3×40A	3×40A
Min. wire size (L1, L2, L1', L2', L1'', L2'', E)	6 AWG	2×8 AWG	2×8 AWG	3×8 AWG	3×8 AWG	3×8 AWG
Max. water pressure	87Psi (0.6MPa)					
Min. water flow to activate unit	0.53GPM (2.0L/min)	0.85GPM (3.2L/min)				
Weight	8.88 lbs	11.97 lbs	12.28 lbs	14.31 lbs	14.31 lbs	14.31 lbs
Product Dimensions (D×H×W)	3.54" × 15.16" × 10.24"					
Water connections	1/2" NPT	3/4" NPT				

Note: For supply connections, confirm using correct breaker size and wire gauge.

INSTALLATION GUIDELINE

- Make sure the appliance is intact, and the fittings are complete.
- Please make sure the main power supply, water pressure, grounding condition, ammeter and wire reach the standard of installation requirement.
- Clean all the impurities of the pipe by allowing water to flow for a few minutes before connecting the heater to the supply line. Any residue or dirt in the pipes may cause damage to the heater.
- We strongly recommend installing a water filter before the inlet of heater. Hard water or water with high levels of minerals and alkali can cause damage to this unit. Water softening system is needed for this case.
- It must be fitted with a pressure reducing valve adjacent to the entrance when the inlet pressure is higher than 150 Psi (1034kPa).
- DO NOT install near tinder or a strong magnetic field. The appliance must only be mounted with inlet & outlet pointing downward VERTICALLY near by the water fittings.
- Avoid locations that are prone to dampness, high humidity, moisture, or dust.

INSTALLATION GUIDELINE

- Install the water heater in a dry, clean area, as close to the target faucet/shower as practically possible. Avoid installing in rooms that are subject to freezing temperatures or corrosive atmosphere. Long uninsulated hot water lines can waste energy and water. NOTE: Make sure the water heater and hot water outlet pipe are out of the reach of children to avoid tampering with the controls or burn themselves on hot water outlet pipe. Moving the water heater or other appliances to provide service to the water heater is not covered under warranty.

- If a check valve is present on the inlet water line, it will create a “closed system.” Heating water in a closed system creates an increase in pressure within the water system because the pressure is not able to dissipate in the main supply line. Referred to as “thermal expansion”, the rapid pressure increase can cause the relief valve to operate (releasing water) during each heating cycle, potentially causing premature failure to the valve or even the water heater. The suggested method of controlling thermal expansion is to install an expansion tank in the cold water line between the water heater and the check valve. Contact your installing contractor, water supplier, or plumbing inspector for additional information.

- There must be sufficient clearance between any object and the top, rear and sides of the water heater in the event service is needed. The controls and plumbing connections at front of unit must have clear access for operation and service.
  Recommended Minimum Clearances:
  12” above and below the water heater
  6” in front and to both side of the water heater.

- A separate branch circuit with copper conductors, overcurrent protective device and suitable disconnecting means must be provided by a qualified electrician.

- All wiring must conform to local codes or latest edition of National Electrical Code ANSI/NFPA 70.The voltage requirements and wattage load for the water heater are specified on the rating label on the front of the water heater.

- The branch circuit wiring should include either:
  1. Metallic conduit or metallic sheathed cable approved for use as a grounding conductor and installed with fittings approved for the purpose.
  2. Nonmetallic sheathed cable, metallic conduit or metallic sheathed cable not approved for use as a ground conductor shall include a separate conductor for grounding. It should be attached to the ground terminals of the water heater and the electrical distribution box.

WARNING

- It is recommended for this product to be installed by a licensed and qualified electrician in accordance with all applicable national, state, and local electrical codes.

- Under no circumstances should you attempt to install, repair, or disassemble the water heater without first shutting off power directly at the fuse or breaker.

- Before installing this product, make sure the installation location has sufficient electrical power available to handle the maximum amperage load for the water heater.

- **Proper ground connection is essential. The presence of water in the piping and water heater does not provide sufficient conduction for a ground. Nonmetallic piping, dielectric unions, flexible connectors, etc., can cause the water heater to be electrically isolated. Do not disconnect factory ground.**

INSTALLATION GUIDELINE

ATTENTION

- ENVO does not cover any damage or defect caused by installation, attachment or use of any type of energy-saving or other unapproved devices (other than those authorized by ENVO) into, onto or in conjunction with the water heater. The use of unauthorized energy-saving devices may shorten the life of the water heater and may endanger life and property.
- ENVO disclaims any responsibility for such loss or injury resulting from the use of such unauthorized devices.
  NOTE: do not cover the operating or warning labels attached to the water heater or attempt to relocate them.

INSTALLATION

- General
  The ENVO electric instant water heater can be used to heat bathroom sink faucets, kitchen sink faucets, showers and bathtub faucets.
- Mounting the unit
  Front and back on unit illustrated below (fig 2).

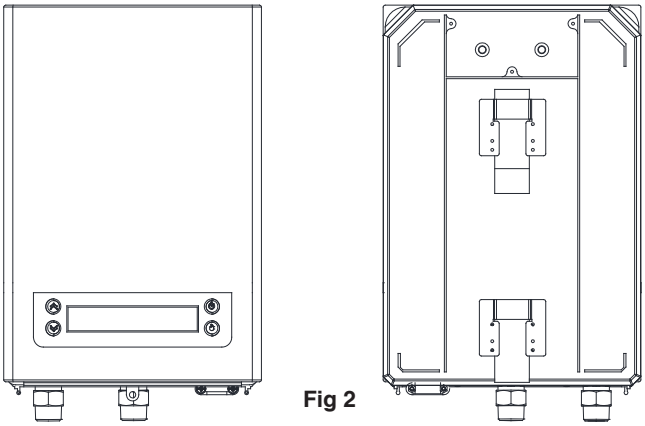

Fig 2

INSTALLATION

Step 1:

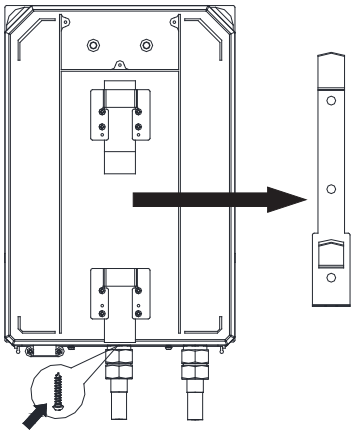

Remove the bracket from the appliance by loosing the screw in the middle of the bottom.

Step 2:

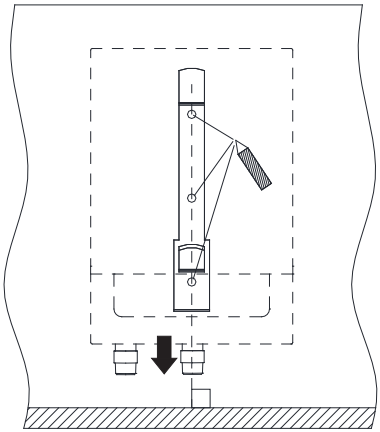

1. Locate installation position for the water heater.
2. Place the bracket on wall and use pencil to mark screw hole locations. Make sure the outlet and inlet pointed downward vertically.

Step 3:

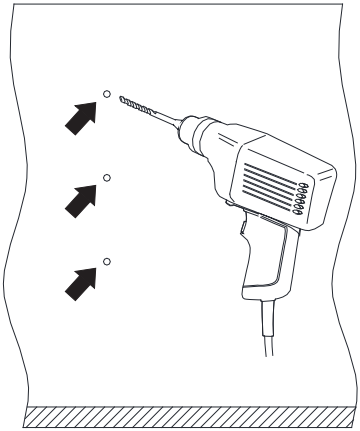

If screw locations are not in stud. Drilling three 0.24''(6mm) diameter holes on the wall. Insert the plastic anchors into the holes. If screw locations are in wall stud, please skip to step 4.

Step 4:

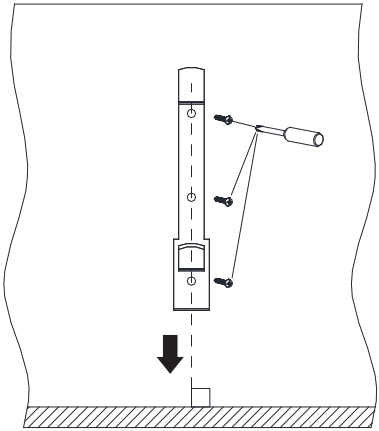

Place the bracket onto the wall and drive mounting screws directly into stud or plastic anchors to secure it.

INSTALLATION

Step 5:

Hang the water heater onto the bracket with outlet and inlet pointed downward. Make sure the water heater is secured.

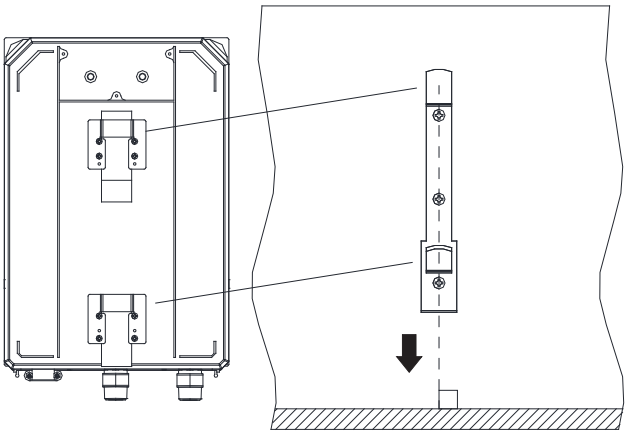

●Plumbing Connections

ATTENTION

1. It is recommended that this water heater be installed by a licensed and qualified plumber in accordance with all applicable national, state, and local plumbing codes.

2. DO NOT solder any pipes with unit connected to pipes, heat from soldering can cause permanent damage to internal parts.

3. Flexible water supply hoses(not provided) comply with United Plumbing Code and suitable for 194°F(90°C) water temperature are recommended for plumbing installation.

4. When connecting the water pipes to inlet and outlet connections, use two wrenches. One wrench to hold the water heater fittings and another wrench to tighten the connecting pipes. Any over-tightening of the connecting pipes can cause permanent damage to internal components of water heater.

5. It is recommended to install a manual shut-off valve(not provided) at the inlet water connection of the water heater to allow for easy shut-off in the event that future maintenance or service is needed.

6. This product does not use a storage tank to maintain hot water, therefore a temperature pressure relief valve (T&P) is not required for most installations. However, in some locations local codes may require a T&P valve for installation. If one is required, install in accordance with local codes and ensure it operates correctly.

7. Only potable water can be used with this water heater. Do not install in locations with pool or spa water, or any locations where chemically treated water can be introduced into the system.

INSTALLATION

●Plumbing Installation

1

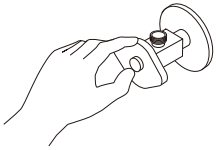

Ensure that water supply is turned OFF at shut-off valve.

2

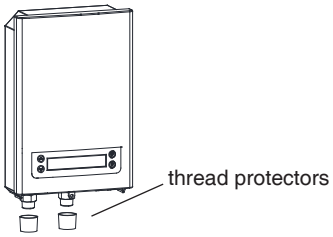

Remove the thread protectors and discard.

3

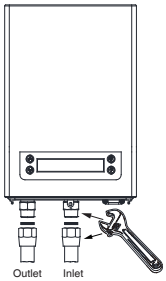

4

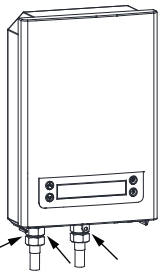

Connect the inlet cold water line to the cold inlet fitting on water heater.
Connect the outlet hot water line to the hot outlet fitting on water heater.

ATTENTION

Use two wrenches. One wrench to hold the water heater fittings and another wrench to tighten the connecting pipes. Any over-tightening of the connecting pipes can cause permanent damage to internal components of water heater.

1. Open the shut-off valve to allow water to flow into the water heater.
2. Check for any leaks at plumbing connections.If there is any leaks from the nipples, firmly tighten with a wrench, but DO NOT OVERTIGHTEN.
3. Open several hot water fixtures to allow water to run through the water heater to purge air from the water lines. Failure to purge air from the water lines can cause permanent damage to the heating elements.
4. Check again for any leaks at plumbing connections. Correct any that are found.

INSTALLATION

●Electrical Connections

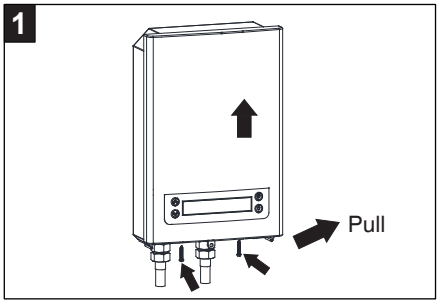

Remove the screws from the bottom of the water heater. Pull up the bottom of the panel a little and slide the panel upwards to disassemble it.

Warning: There is wire connection between the panel and the heater. Do not over pull the panel.

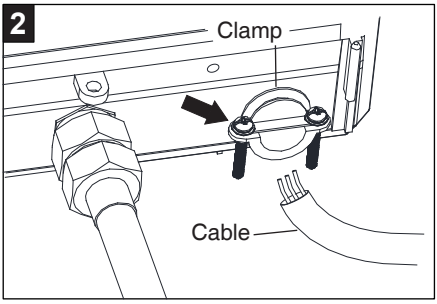

Loose the screws of the clamp and slide the matching cable through the clamp. Please check the product specification sheet on page 10 for the cable size.

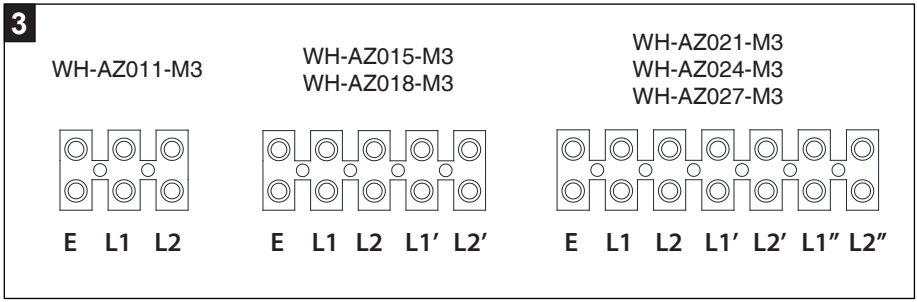

1. Connect the wires to the terminal block and secure.
2. Tighten the screws of the clamp to secure the cable.
   Note: You'll see different terminal block on differnet models. Check page 7, page 8 and page 9 for the reference of wire connection.

INSTALLATION

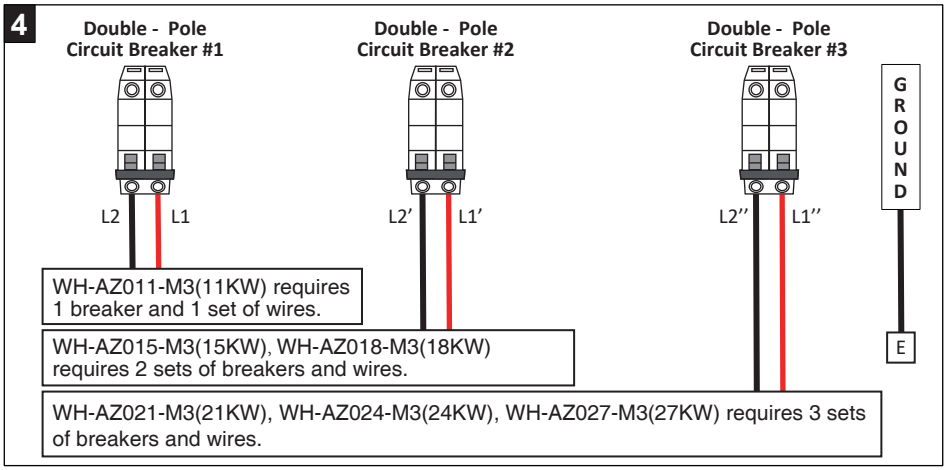

Make sure the connection between the appliance and the breakers are correct.

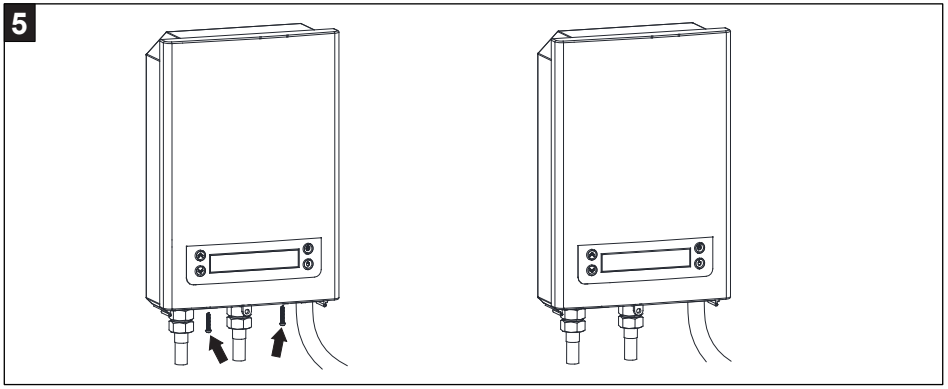

Slide the panel from the top of the heater and push back to it's position. Secure the panel with screws from the bottom.

ATTENTION

1. **Make sure that the breaker is switched OFF before installing the wire to avoid any danger of electric shock. All mounting and plumbing must be completed before proceeding with electrical connection.**

2. **The heater must be connected to its own independent electrical circuit. Install a fuse box or switch ("breaker") for exclusive use of the heater.**

3. **All unit must be connected to a properly grounded dedicated branch circuit with proper voltage rating.**

OPERATION INSTRUCTIONS

CAUTION: Wait until water is fully flowing through the heater before turning on the breaker.

1. Allow water to flow through the water heater unit. Allow the water to flow continuously to flush out any debris as well as purge the pipes of any air.
2. Turn on the breaker to power the water heater. An audible beep will be heard and the LED display will light up for 2 seconds.
3. Press ⏻ to turn ON/OFF the appliance. When the unit is ON, the LED will display the water's temperature. 20 seconds after the flow of water has been stopped the screen will to into energy saving mode. The unit is still ON and the screen will still light up when a button is pressed.
   Check the product specification page to check minimum water flow for activation.
4. Press ︿ and ﹀ to adjust the outgoing water temperature. The temperature setting ranges from 86-125°F (30-52 ° C).
   Caution: If the unit is paused there may be an initial burst of very hot water when resuming. Please allow the water to flow for a few moments to let the temperature settle. It's always advised to test the water temperature with your hand before hopping straight into the shower.
5. Press 👆 to convert the temperature display between Fahrenheit and Celsius.
6. The water heater unit will remember and save the previously used temperature on the next use.
7. There is an over-temperature protection system for this unit. When the temperature reaches 144 ° F (62 ° C) the system will automatically start to decrease the temperature until it's back to a safe level. Only then will you be able to increase the temperature again.

- If the unit will not be used during the winter completely drain out the water to prevent freezing.
- Periodically clean the water heaters inlet strainer, the faucet's aerator, and the shower's head to ensure free flow of water.

CLEANING & MANTENANCE

⚠ **ATTENTION**

- Do not attempt to repair the water heater unit yourself. Please contact a certified professional or call our customer support for assistance. It is important to shut off all power to the water heater directly at the fuse or breaker. Failure to do so could cause permanent damage to the water heater and void the product warranty.
- Before performing any maintenance make sure to take precaution and prevent exposure to the potentially hot water. The water may be hot enough to present a serious scalding hazard. The water should be safely drained to prevent any injury or property damage.
- It is recommended to regularly maintenance the water heater. Proper maintenance will help lead to a long running, trouble free water heater.
- Periodically remove scale and dirt that may build up at the faucet aerator.

CLEANING & MANTENANCE

Cleaning Steps:

Step 1. Shut off power to the water heater before draining water.

Step 2. Inspect the inlet and outlet water connections for any signs of damage or failure. Look for any signs of leakage, damage, or cracks in each connection.

Step 3. Unscrew the nipple of inlet, check the filter inside the inlet. Replace with a new one if it have to.

Step 4. Install the nipple back to the inlet. Make sure there is washer between the nipple and the inlet. Firmly tighten with a wrench. Make sure not to over tighten the connections to avoid damage to internal connections of the water heater.

Step 5. Reconnect the pipe to the inlet. Use two wrenches, one wrench to hold the water heater fittings and another wrench to tighten the connecting pipes.

TROUBLE SHOOTING

SYMPTOMS	POSSIBLE CAUSES	RECOMMENDED ACTIONS
Inlet and outlet fittings leaking.	A. Fittings not tight. B. Rubber washer worn-out.	A. Tighten fittings. B. Change rubber washer.
LED no signal.	A. Power not connected. B. The temperature control device disconnected.	A. Connect power to the unit. B. Call our technical support line for assistance.(305-363-4679).
Functional keys not working.	A. No water out from shower. B. Water pressure too low.	A. Open valve to get water. B. Raise the water pressure.
Water too hot.	A. Too high temperature set.	A. Set a lower temperature.
Water too cold.	A. Low temperature set. B. Water flow too much.	A. Set a higher temperature. B. Reduce water flow.
Outlet water gets smaller and smaller.	Inlet strainer of the unit, faucet or shower head clogged.	Clean strainer, faucet and shower head.
LED shows E1.	Outlet water temperature abnormal, over 167°F(75°C).	Turn off the power and keep the outlet water flowing out in 30 seconds, then turn on the power again.
LED shows E3.	Outlet temperature sensor failure.	Call our technical support line for assistance.(305-363-4679).

PACKING LIST

Item	Unit	Quantity
Electric Water Heater without cable	Unit	1
Installation kit	Set	1
Install & Operation Manual	Copy	1

ENVO

by ANZZI