KINGSTON

Pressure Balancing Valve Tub & Shower Unit

Installation Instructions

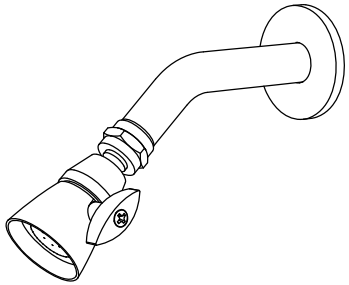

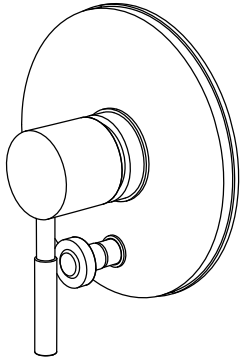

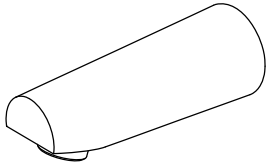

www.kingstonbrass.com

TOLL-FREE CUSTOMER SERVICE: 1-877-2-KBRASS
TECHNICAL SUPPORT E-mail: service@kingstonbrass.com
12775 Reservoir Street, Chino, CA 91710

NOTICE

Failure to follow all directions may cause leaks which may result in water damage

⚠CAUTION

Failure to follow all installation directions may cause product to detach from the wall and cause serious injury

Pressure Balancing Valve and Mounting Bracket:



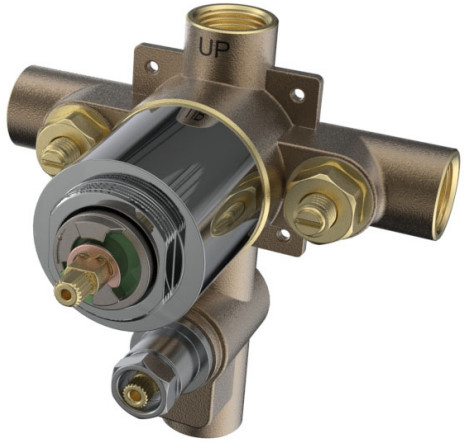

Before Installation :

- Flush all lines to avoid debris from getting into your shower valve as this may affect its proper functioning.
- Failure to flush lines properly will void warranty.
- Apply Teflon tape or pipe thread sealer on all threaded connections.
- Do not over-tighten any of the threaded connections as this may create structural damage and cause leaking.
- Do not use any power tools for assembly or installation of this shower valve as this may cause structural damage to the fixture.
- Shut off water supply to the shower valve.

Tools required for installation of this product are :

1. Screw Driver
2. Tubing Cutter
3. Teflon Tape
4. Adjustable Wrench
5. Channel-lock Pliers
6. Measuring Tape

Installation Step:

1. Flip the valve to the back side, pass screws through the sleeve, then secure the mounting bracket onto the valve. Use a screwdriver to tighten the screws.

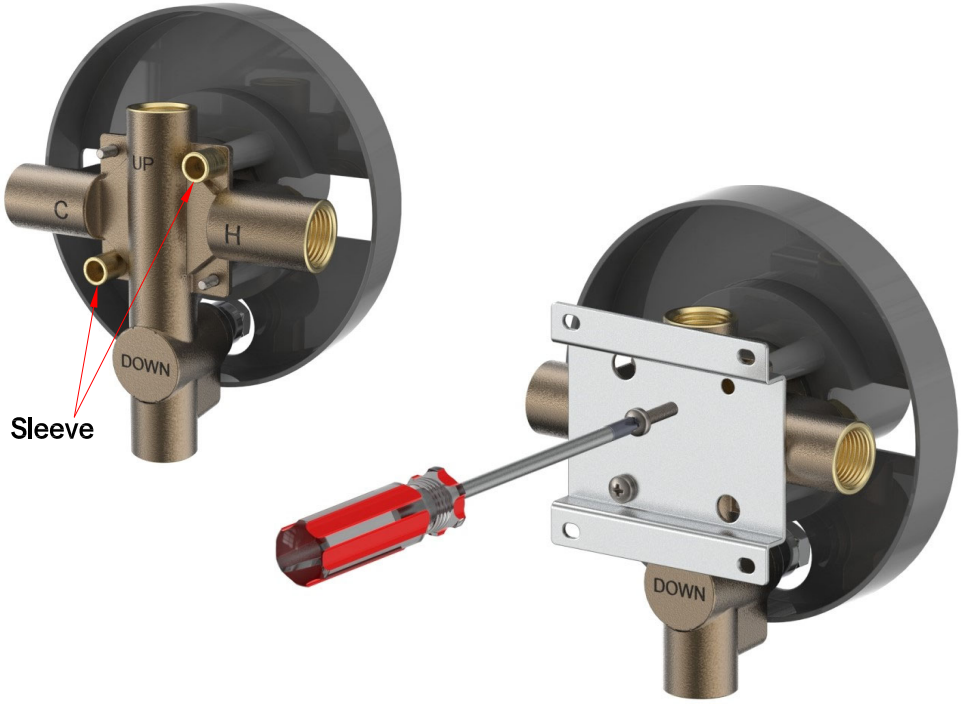

2. Remove the plastic plate, then secure the valve onto the mounting bracket using the provided wood screws. Finally, secure the bracket to the wall.

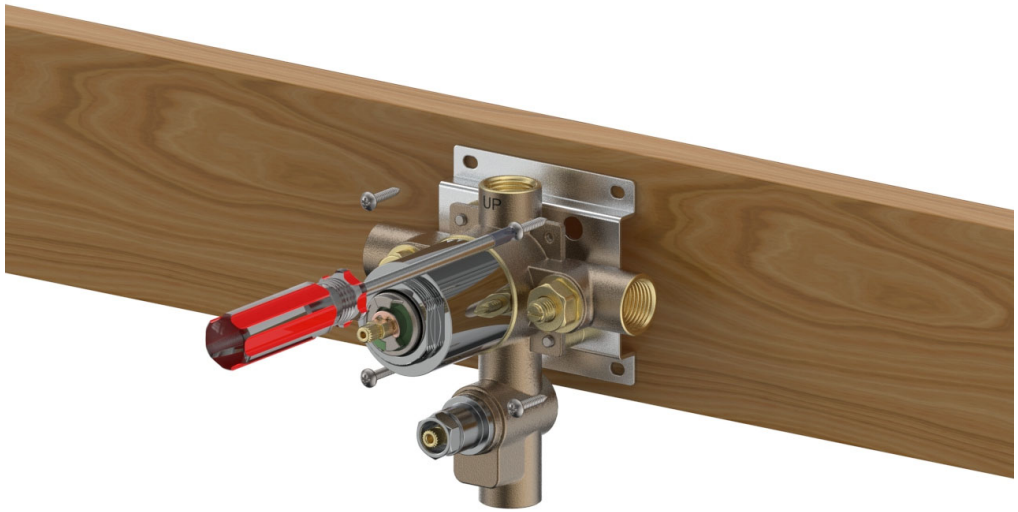

3. Flip the valve back to the front side. Install your supply pipes so that the rough-in valve is placed 1-7/8" from the centerline of the inlets to the surface of the finished wall, the plastic plate pre-installed on your valve may also be used as a guide.

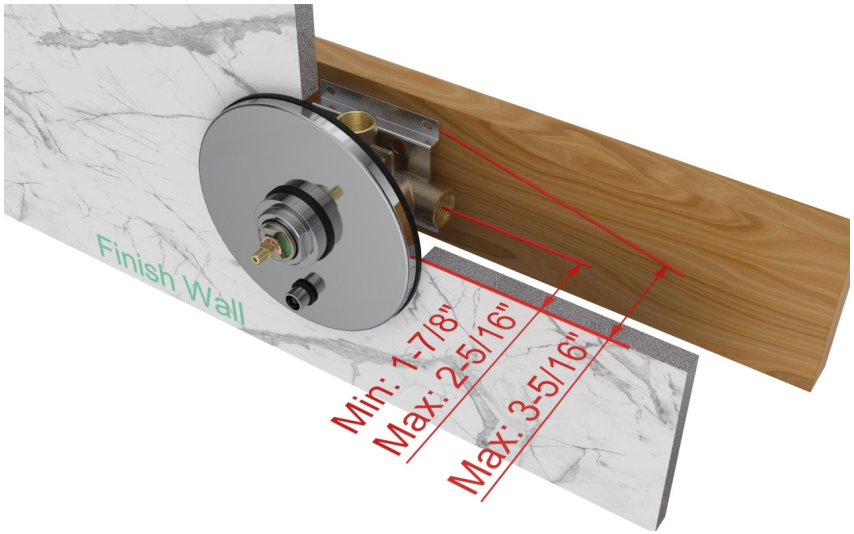

4. Attach the valve making sure to follow the up and down markings on the back of the valve, connect the hot and cold water lines to their respective inlets, do not overtighten as this may cause structural damage to the valve and create a potential leak.
5. Apply Teflon tape or pipe thread sealer on all threaded connections.



6. Plumb the showerhead riser and finish with a 1/2" female fitting, plumb the tub outlet to its desired location, making sure to allow a minimum of 8" from the bottom outlet to the tub spout elbow, stub-out with a 1/2" male fitting allowing a minimum of 1/2" thread to protrude from the finish wall, do not use pex piping between the shower valve and the tub spout as this will restrict the flow of water as this will create back pressure and cause water to drip from the showerhead as well, do not overtighten as this may cause structural damage to the valve and create a potential leak.

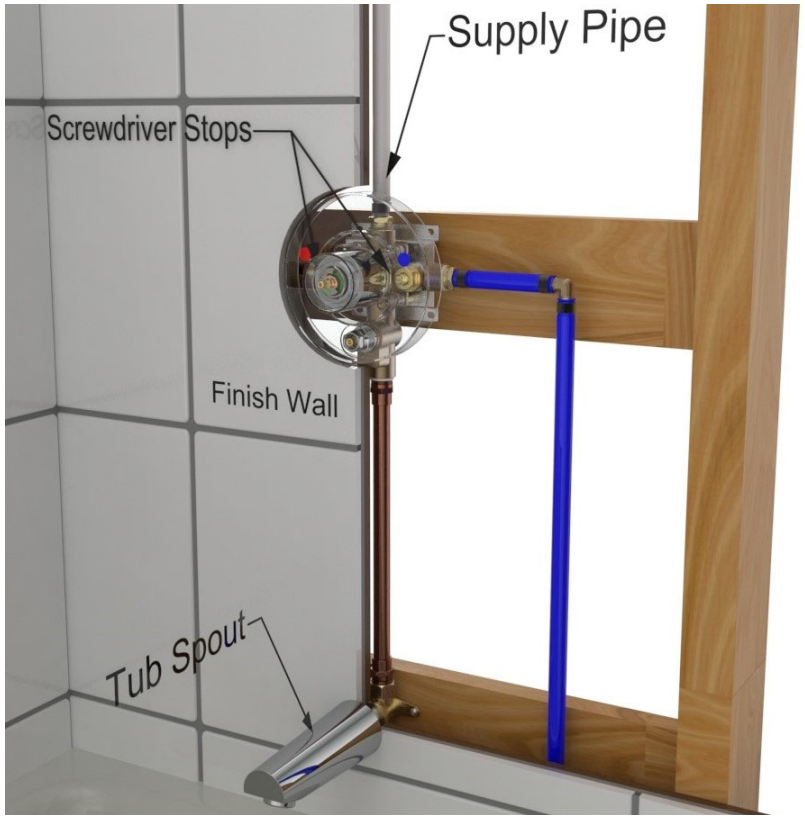

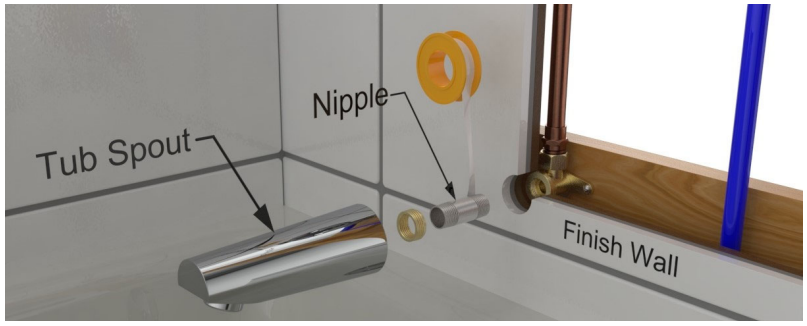

7. Make sure to close both screwdriver stops, located on either side of the valve, open the water supply to the shower valve and check for leaks at all connection points, make sure that the shower valve is shut-off and open both screwdriver stops.
8. Attach the diverter handle by inserting into the lower hole of the face plate and securing from the back with the enclosed nut, mount the enclosed gasket along the perimeter of the faceplate, and attach faceplate to the rough-in valve, being careful to insert the diverter shaft on the diverter valve at the bottom of the valve.
9. Attach the handle by securing with the enclosed Phillips head screw, and cover the screw by inserting the indicator button.

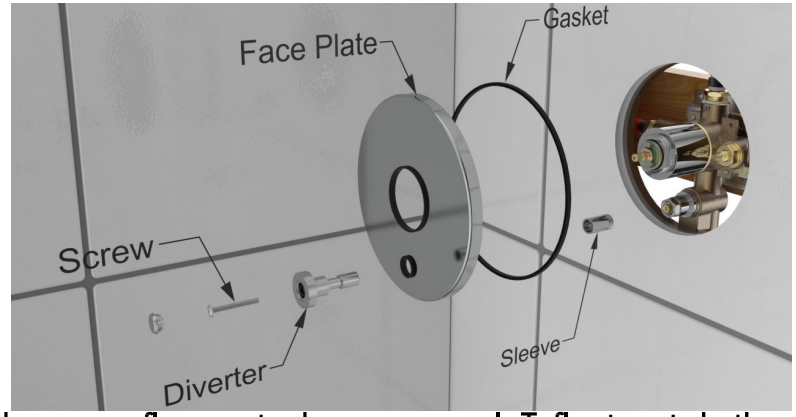

10. Insert shower arm flange onto shower arm, apply Teflon tape to both ends of the shower arm and thread shower arm to the 1/2" female fitting previously installed.
11. Apply Teflon tape on tub spout stub-out, after applying a thin bead of silicone caulking around the perimeter of the back of the tub spout, thread tub spout on to the stub-out, and clean excess caulking
12. Fully open valve and allow water to run for at least one minute, this will help clear any debris in the line, thread showerhead onto the shower arm.

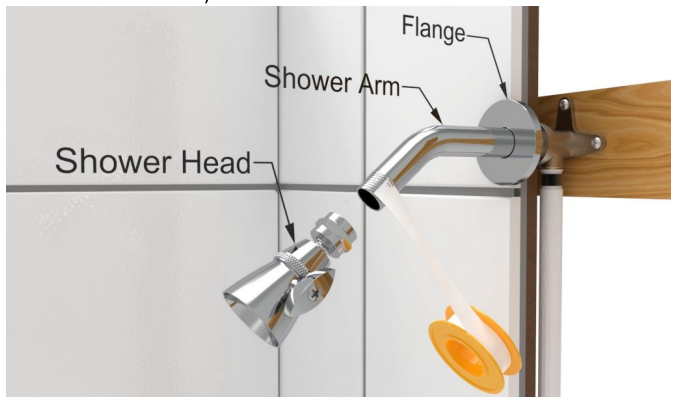

Adjusting temperature limiting feature:

Your valve is designed with a temperature limiting feature, which allows you to limit the range of motion of the lever, thereby preventing accidental scalding by children or seniors.

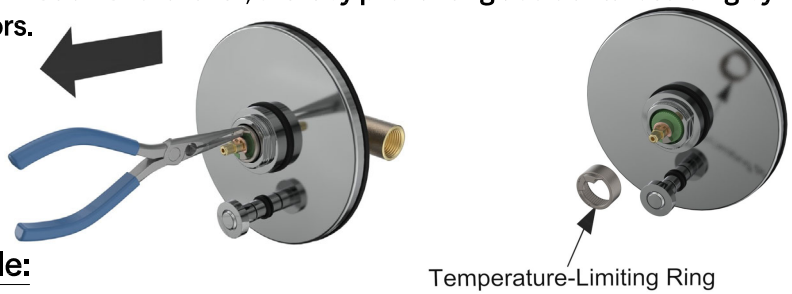

Remove Handle:

Use the channel lock pliers to pull the outer ring from the top portion of the cartridge. Rotate a few degrees clockwise and reinsert. Test the flow and temperature by reinserting the handle and turning on the valve. If you would like to lower the maximum temperature even further, simply repeat the previous steps until you are satisfied.

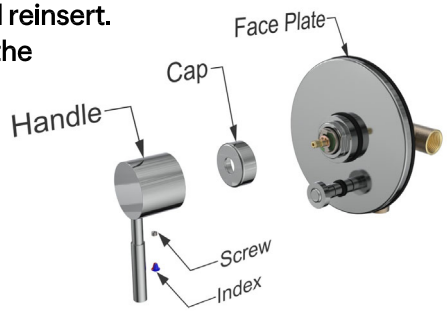

Back to Back installation instructions:

Your shower valve is equipped with a reversible cartridge, suitable for back to back installation, a reversible cartridge will allow you to modify the direction of the water supply to the correct orientation without changing the pipe locations, as in the case of back to back bathrooms.

1. Remove the handle and cap (1).
2. Carefully remove the “E” clip from the body with pliers.
3. Remove the stem ring from the cartridge body with pliers.
4. Turn valve stem a full 180°.
5. Replace the stem ring, make sure that flat side is on top.
6. Replace "E" clip.

Replace cap and handle.

(FIG. 1)

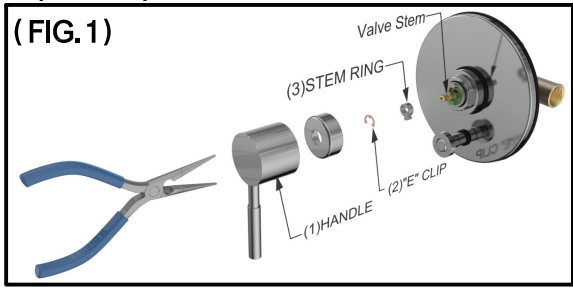

(FIG. 2)

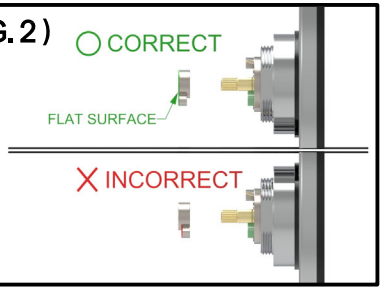

Procedure for Pressure Balance and Cartridge replacement and maintenance:

1. Remove handle and face plate.
2. Close the stop valves, located on either side of the valve.
3. Remove cap and bonnet nut using a crescent wrench.
4. Pull cartridge by hand.
5. Using needle nose pliers pull spool assembly.
6. The spool is a cylindrical piece located horizontally inside the spool assembly, this spool is designed to move freely.
7. Place the spool in the same position as if it was installed in the valve and shake in a horizontal motion, if the spool does not rattle, your spool might be stuck.
8. Soak it for at least 4 hours in a 50/50 solution of water and vinegar.
9. Take it out and rinse, perform the same test. If the spool is still not rattling, change the spool.
10. Reinstall the spool and valve assembly making sure to line up the 2 nubs in the back of the spool assembly with the indentations inside the valve body.
11. Replace cartridge and cap.
12. Fully open the stop valves, replace the faceplate and handle.

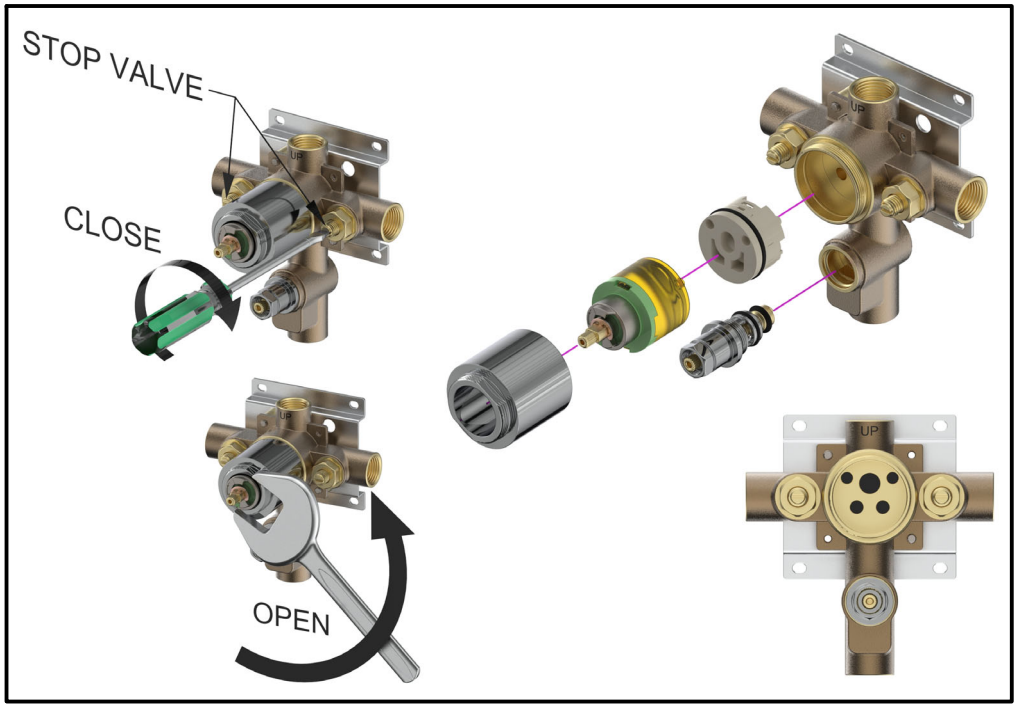

©2025 LVC Kingston LLC. All Rights Reserved.
2025-11-TG