Parts:

Replacement Parts:

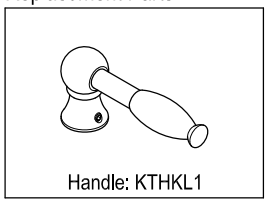

Handle: KTHKL1

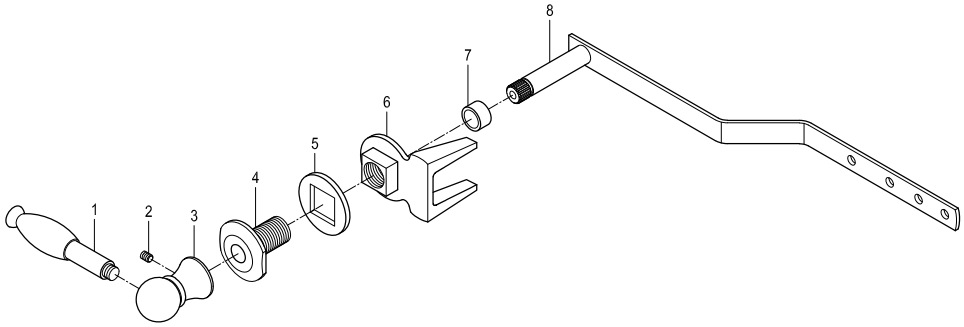

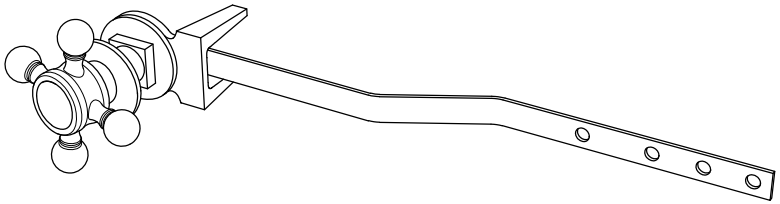

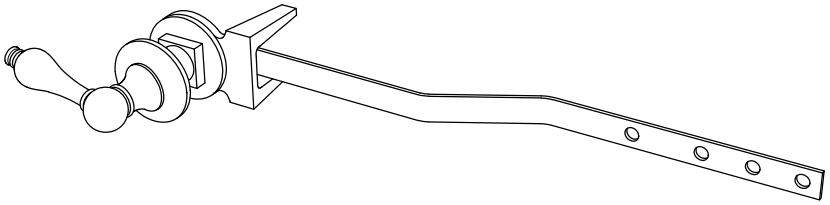

* Never use cleaners containing abrasive cleansers, ammonia, bleach, acids, waxes, alcohol, solvents or other products not recommended for chrome. This will void the warranty.

KINGSTON
KITCHEN & BATH

www.kingstonbrass.com
TOLL-FREE CUSTOMER SERVICE: 1-877-2-KBRASS
TECHNICAL SUPPORT E-mail: service@kingstonbrass.com
12775 Reservoir Street, Chino, CA 91710

KINGSTON
KITCHEN & BATH

INSTALLATION INSTRUCTIONS
Front Mount Tank Lever

Need Tools:

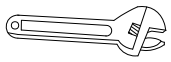

Adjustable Wrench



Allen Wrench

Disassemble Tank Lever :

Removing brass cotter pin from handle assembly end and slide pieces off.

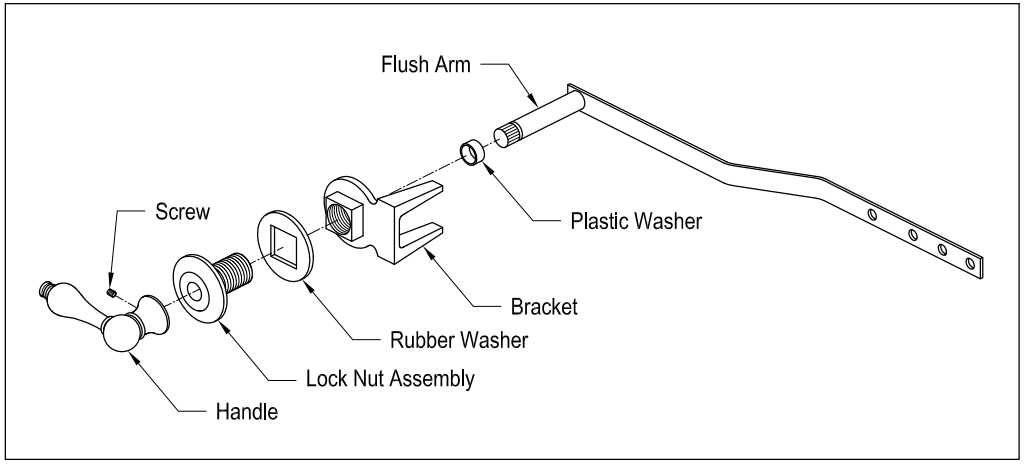

1

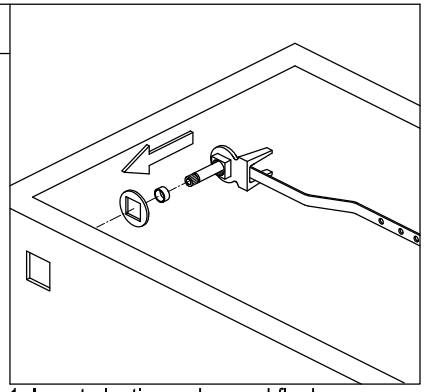

1. Insert plastic washer and flush arm through bracket, then place rubber washer onto bracket.

2

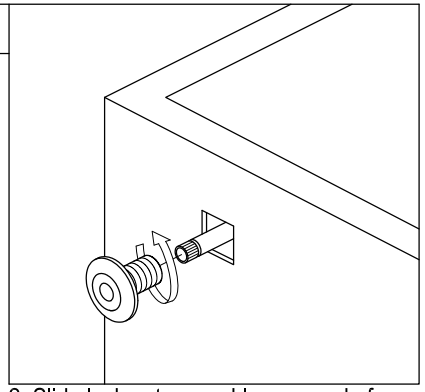

2. Slide lock nut assembly over end of flush arm from front and tighten by hand or adjustable wrench.

3

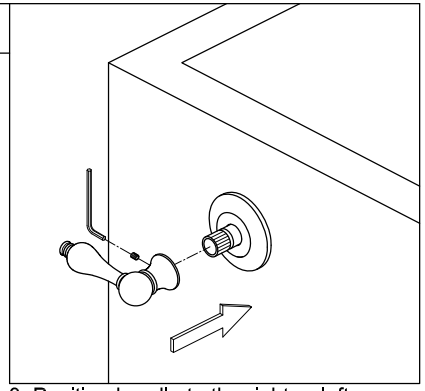

3. Position handle to the right or left depending on preference and secure by tightening set screw on the side of the handle or in certain applications it may have a screw in the center of the handle, after securing handle, placed decorative handle cap (certain models only) onto handle.

4

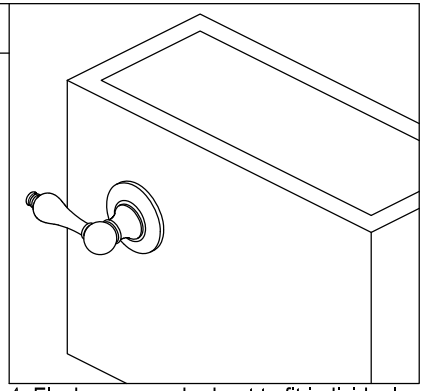

4. Flush arm may be bent to fit individual applications.

© 2022-08-E Kingston Brass