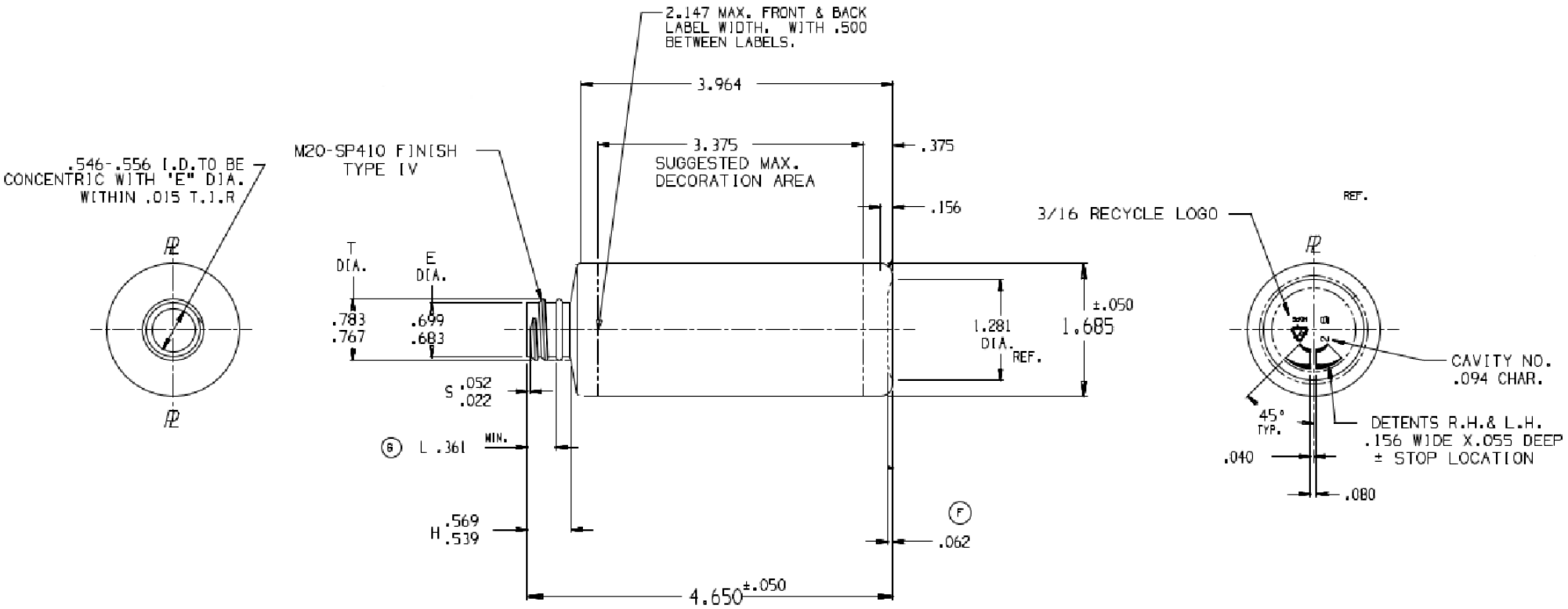

DISCLAIMER	DISTRIBUTED BY:	REF NO.:
THIS INFORMATION IS PROVIDED AS A GENERAL GUIDE, INCLUDING DIMENSIONS. IT IS THE CUSTOMER'S RESPONSIBILITIES TO SELECT THE PROPER CONTAINER FOR PRODUCT AND APPLICATION COMPATIBILITY.	Pipeline Packaging	DWG30420
	DESCRIPTION: 4 oz HDPE Cylinder, 20-410, 12.9 Gram	