OPERATOR'S MANUAL

Model SPYSD-50 & SPYSD-80100
Side Deflectors

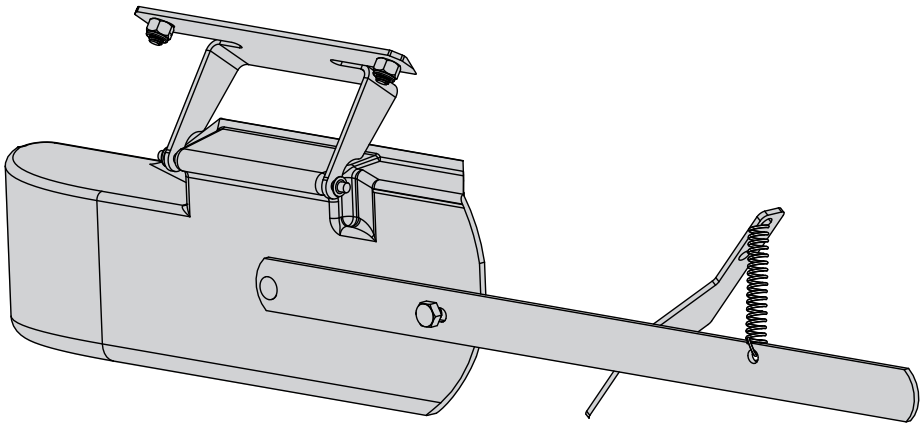

Spyker Spreaders
Contact Us at 800.972.6130

⚠ IMPORTANT

This manual contains information for the safety of persons and property.
Read it carefully before assembly and operation of the equipment!

1018412 Rev. B

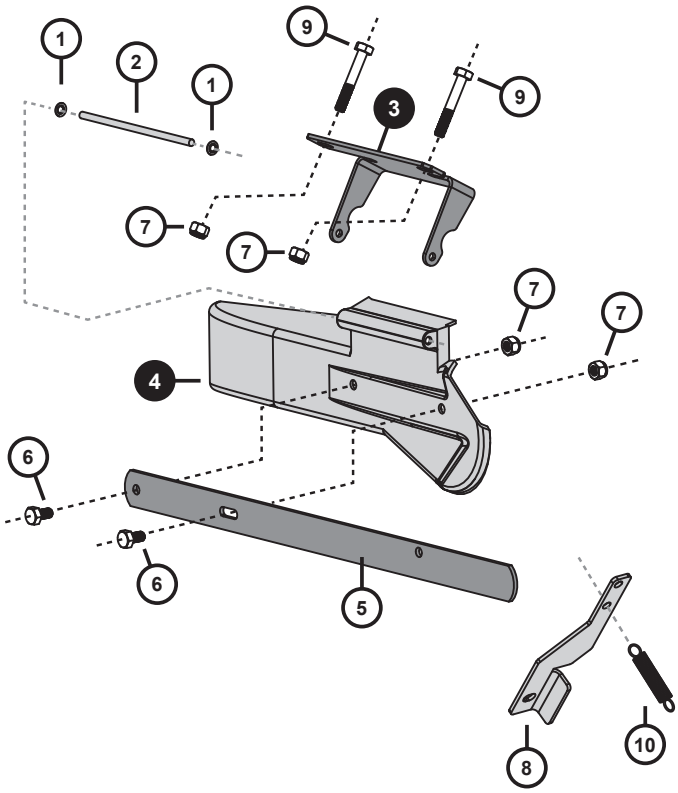

SPYSD-50

Ref #	Part #	Description	Qty
1	1017034	Nut, Speed	4*
2	1017648	Rod, Hinge	1
3	1017653	Bracket, Deflector	1
4	1000684	Deflector Shield, Side	1
5	1017649	Bar, Kick	1
6	1004880	Bolt, HexHd 1/4x1/2 SS	2
7	1005198	Nut, NylonLock 1/4-20, SS	4
8	1018410	Bracket, Spring	1
9	2M0828SS	Bolt, HexHd 1/4x1-3/4 SS	2
10	B-6300	Spring, SS.	1

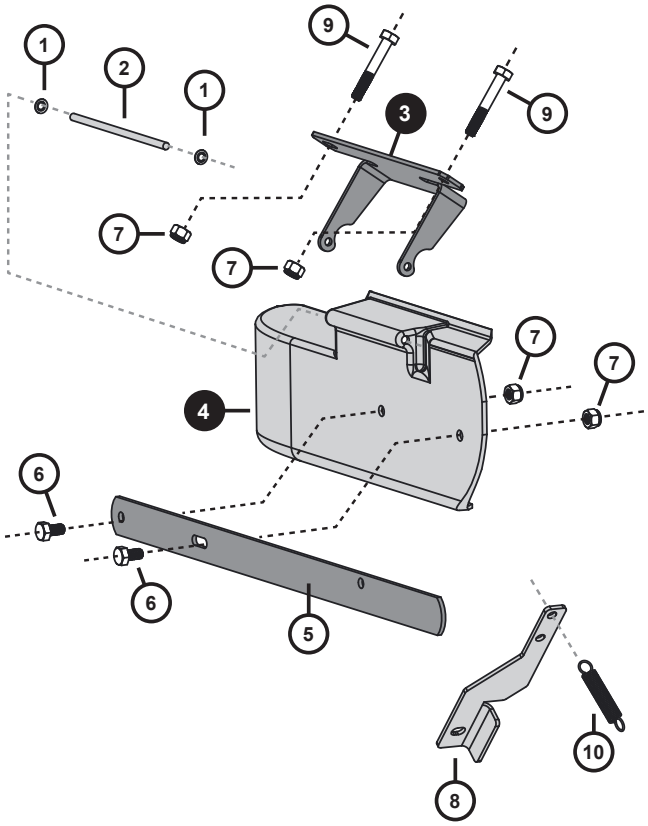

SPYSD-80100

Ref #	Part #	Description	Qty
1	1017034	Nut, Speed	4*
2	1017648	Rod, Hinge	1
3	1017453	Bracket, Deflector	1
4	1001181	Deflector Shield, Side	1
5	1017649	Bar, Kick	1
6	1004880	Bolt, HexHd 1/4x1/2 SS	2
7	1005198	Nut, NylonLock 1/4-20, SS	4
8	1018410	Bracket, Spring	1
9	2M0828SS	Bolt, HexHd 1/4x1-3/4 SS	2
10	1018738	Spring, SS.	1

Parts 3 & 4 are the only variations between the two deflector kits.

Assembly steps on the back are illustrated with SPYSD-80100 parts, however, the steps are the same.
**Because they are incredibly small and easy to misplace, two (2) extra Speed Nuts have been added to each kit. (Item #1 / Part #1018411)*

Do not return product if any parts are missing. Please call: 1 (800) 972-6130

 ©2016 Spyker Spreaders / A Brinly-Hardy Co.

1. Place end of the hinge rod (2) on a solid surface. Align a speed nut (1) on the end.

   NOTE: Protruding washer lip (1) should be on the outside edge.

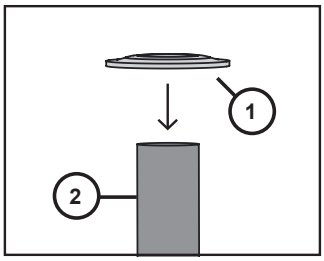

   Using a small socket (such as 7/32") and a hammer, tap down on the speed nut (**1**) until it is 1/8" down the length of the hinge rod (**2**).

   NOTE: This step may be easier if the hinge rod (2) is braced in place with a vice.

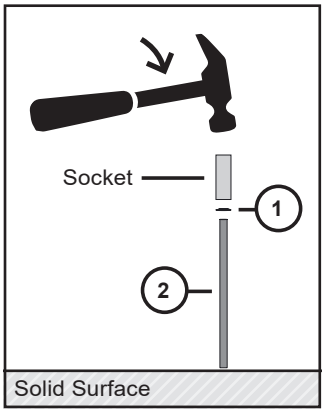

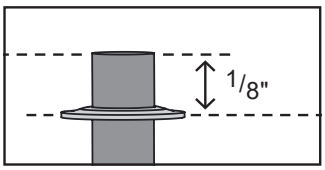

2. Align the deflector bracket (**3**) and side shield (**4**) as illustrated below. Slide hinge rod assembly from Step 1 through the deflector bracket (**3**) and side shield (**4**).

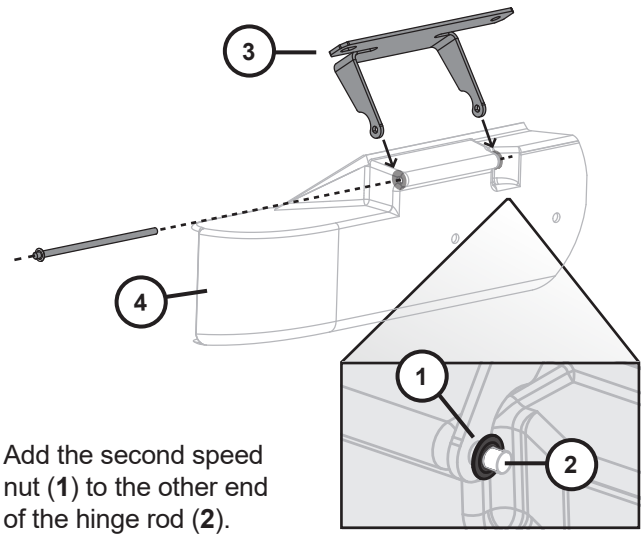

   Add the second speed nut (**1**) to the other end of the hinge rod (**2**).

   Place rod end on solid surface and use a hammer and socket to tap down the second speed nut.

3. Fasten the kick bar (**5**) to the assembled side shield using two hex head bolts (**6**) and two lock nuts (**7**).

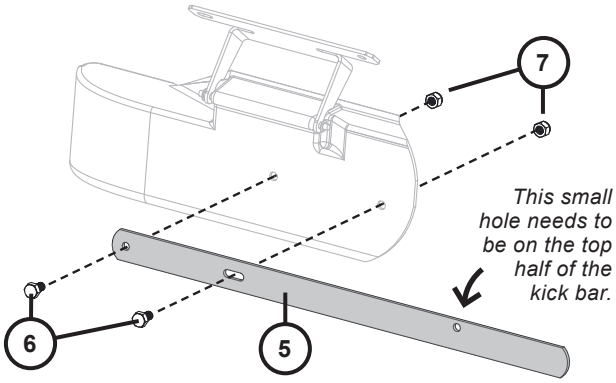

4. Temporarily remove the bolt & nut on the left side of the kick-stand (A). Add the spring bracket (**8**) as illustrated below.

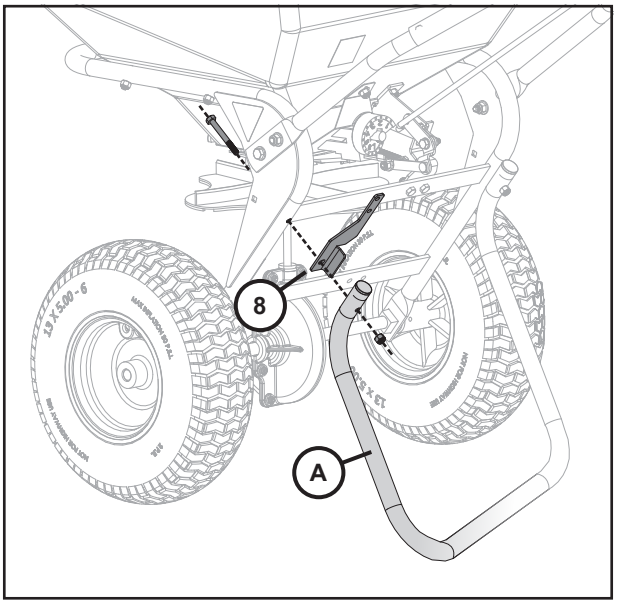

5. Remove existing nuts, washers and bolts holding the left side of the spreader hopper to the frame.

   NOTE: *Set aside the white washers (**B**) that you've removed from your spreader. (Discard the removed nuts and bolts).*

   Add the salvaged white washers (**B**) to each of the two new bolts (**9**).

   Align the side deflector with the holes of the frame and run the two bolts (**9**) through the same location of the spreader, passing through the spreader frame and deflector assembly (as illustrated below).

   Secure in place with two nylon lock nuts (**7**).

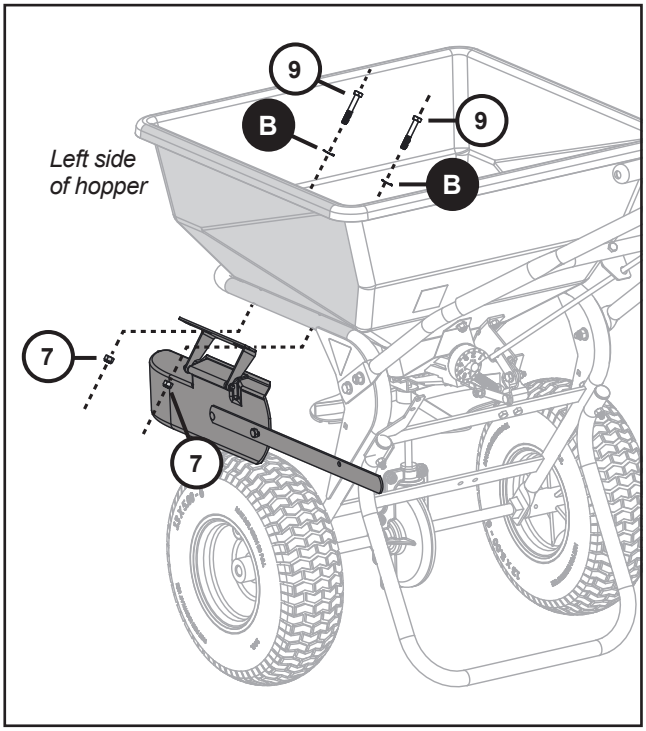

6. Loop the spring (**10**) through the spring bracket added on Step 4 and the kick bar added on Step 3.

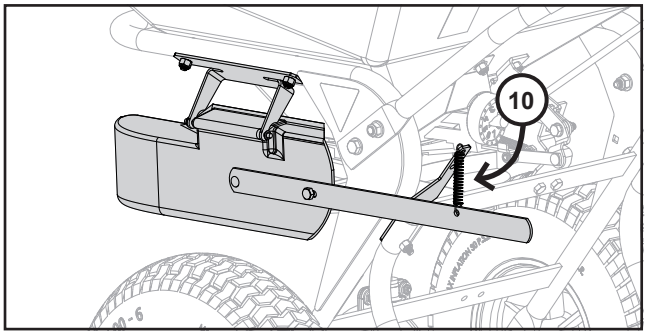

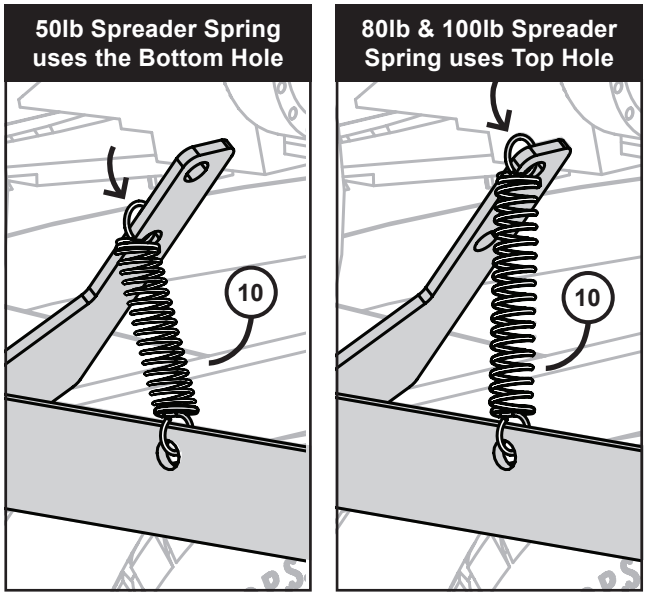

 ©2016 Spyker Spreaders / A Brinly-Hardy Co.