KBSS2216P

Wall Mounted Fold Down Shower Seat With Legs Support

M8 x 50 (4 pcs)

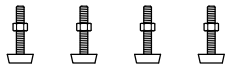

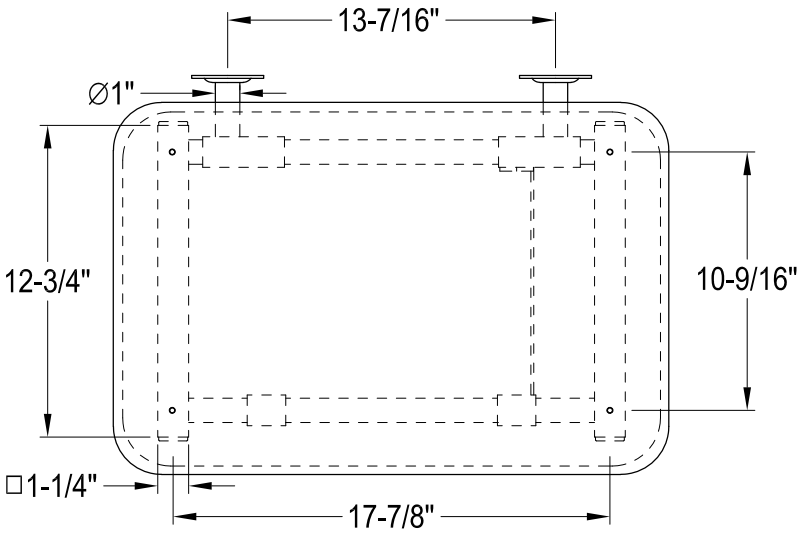

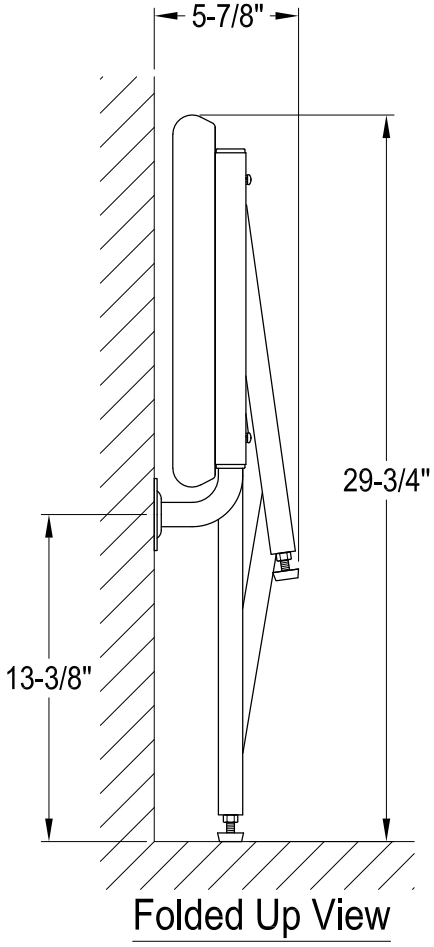

Folded Up View

