KINGSTON

TO ORDER PARTS, CALL: 1-877-252-7277
www.kingstonbrass.com

KS3030,1,2,3,5,6,7,8TX

Single Handle Three-Way Diverter Valve with Round Trim Kit

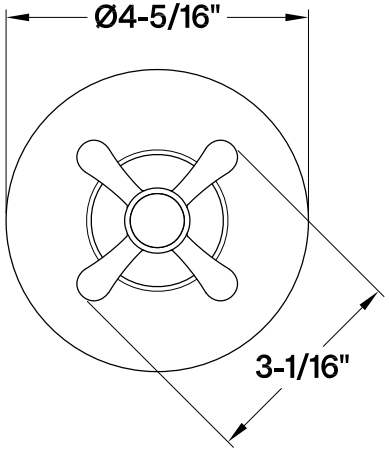

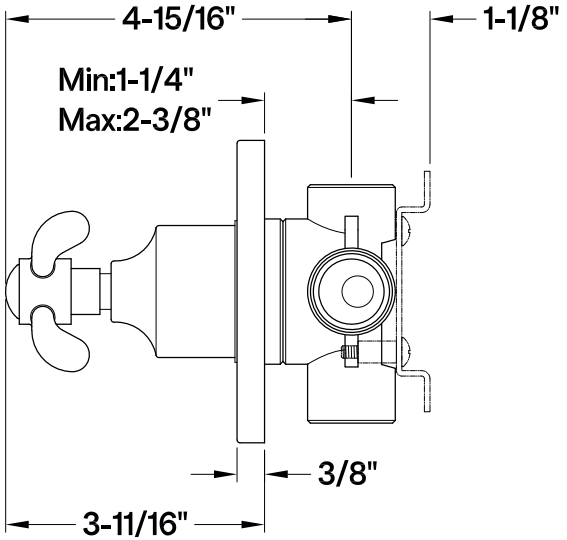

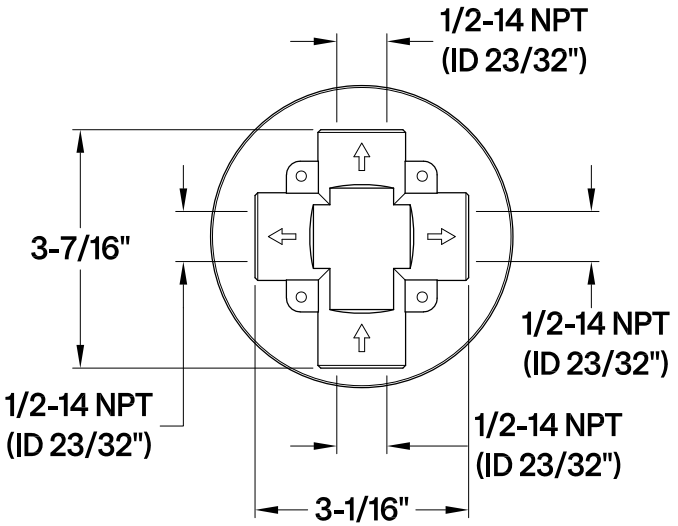

Bracket

