Tea-for-Two® | K-865-GHCP

71-3/4" x 36" drop-in Heated BubbleMassage™ air bath

Features

- 44 airjets release thousands of heated bubbles that surround, support, and massage the body
- Variable-speed blower lets you adjust massage intensity to 18 levels
- Automatic and manual purge cycles remove residual water from air channels after use
- Spacious design accommodates up to two bathers
- Lighted keypad control
- 60-minute automatic shutoff timer
- Safeguard® slip-resistant surface provides excellent traction underfoot
- Integral lumbar support

Sustainability

Available Colors/Finishes

Color tiles intended for reference only.

0	White
96	Biscuit
47	Almond
NY	Dune
7	Black Black

1-800-4KOHLER (1-800-456-4537)
Kohler Co. reserves the right to make revisions without notice to product specifications.
For the most current specification sheet, go to www.kohler.com USA or www.kohler.ca Canada.
5-12-2026 22:7 - US-CA

Codes/Standards

ASME A112.19.1/CSA B45.2
ASME A112.19.7/CSA B45.10
ASTM F462
UL 1795
CSA C22.2 No. 218.2
cUL Listed
UL Listed

Technical Information

All product dimensions are nominal.

Drain Location:	Reversible
Drain Hole Diameter:	2-1/4" (57 mm)
Minimum Flat for Door:	2-1/8" (53 mm)
Basin Area, Bottom:	49" x 22" (1245 mm x 559 mm)
Basin Area, Top:	62" x 28" (1575 mm x 711 mm)
Water Depth:	17" (432 mm)
Water Capacity:	89 gal (336.9 L)
Minimum Floor Load:	80 lbs/ft^2
Weight:	455 lbs (206.4 kg)
Cutout:	Drop-in, 70-1/4" x 34-1/2" (1784 mm x 876 mm)

Material

- KOHLER® enameled cast iron

Recommended Products/Accessories

K-582 Undermount kit for select 72" Tea-for-Two bath models

K-1179 Tiling-in bead, 180" length

Required Products/Accessories

- K-23857 Bath drain trim

or

- K-78440 33" cable pop-up bath drain

Technology

- Heated BubbleMassage™ technology warms and humidifies air before it enters the bath

Required Electrical Service

Two dedicated circuits required, protected with Class A Ground-Fault Circuit-Interrupter (GFCI). Outside North America, this device may be known as a Residual Current Device (RCD).

Blower:	120 V, 15 A, 60 Hz
Air bath:	120 V, 15 A, 60 Hz

Electrical Component Ratings

Blower:	120 V, 10 A
Air bath:	120 V, 5 A, 60 Hz

Warranty

See website for detailed warranty information.

KOHLER® Enameled Cast Iron Bath and Shower Base Lifetime Limited Warranty

1-800-4KOHLER (1-800-456-4537)
Kohler Co. reserves the right to make revisions without notice to product specifications.
For the most current specification sheet, go to www.kohler.com USA or www.kohler.ca Canada.
5-12-2026 22:7 - US-CA

THE BOLD LOOK OF KOHLER

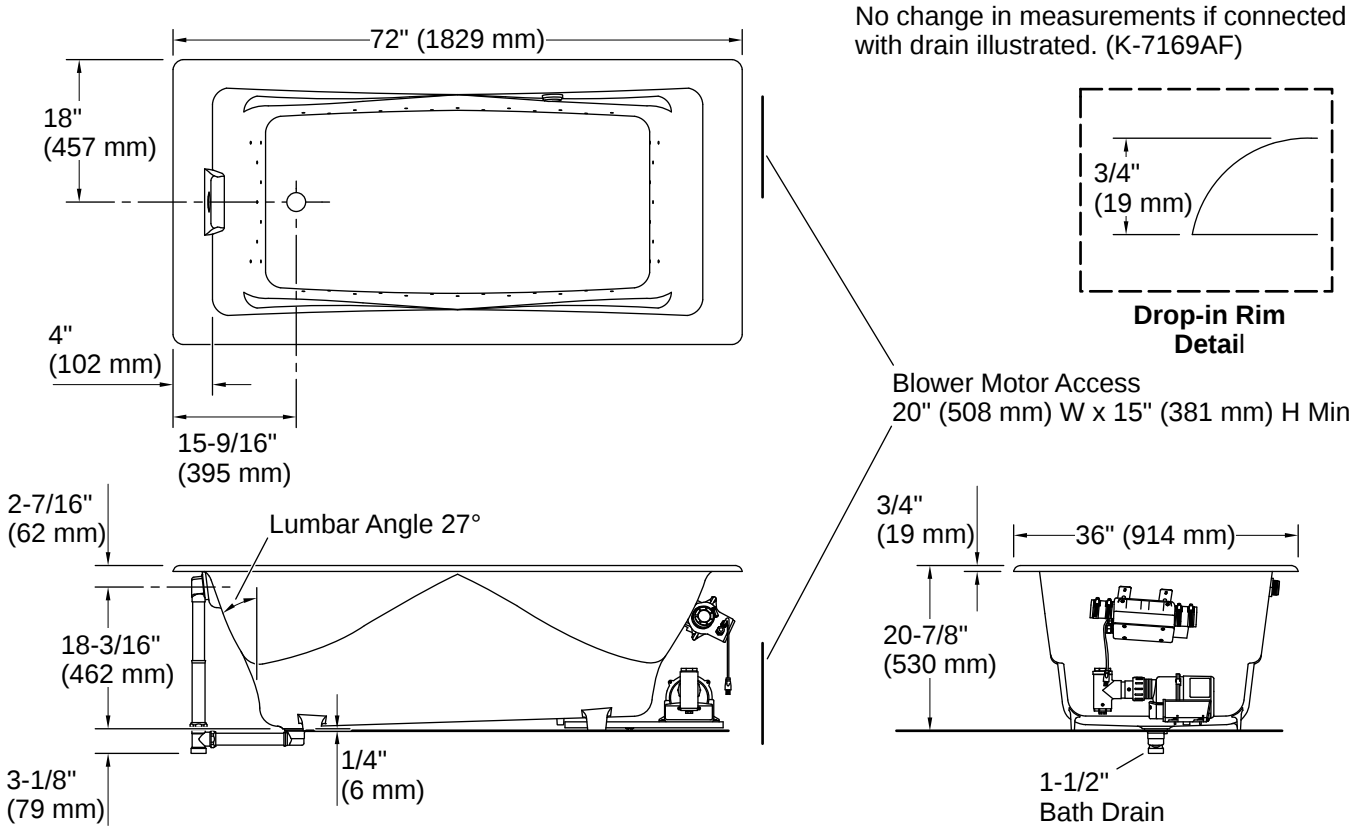

Installation

- Drop-in or undermount
- Reversible drain
- 120 V electrical requirement allows for easy installation with standard outlet
- Requires two dedicated circuits
- Requires cable pop-up bath drain and bath drain trim (sold separately)

Installation Notes

Install this product according to the installation instructions.

Measure your actual product for rough-in details.
The hot water supply should be 70% of the capacity of the bath or greater. Installations will vary.

1-800-4KOHLER (1-800-456-4537)
Kohler Co. reserves the right to make revisions without notice to product specifications.
For the most current specification sheet, go to www.kohler.com USA or www.kohler.ca Canada.
5-12-2026 22:7 - US-CA

THE BOLD LOOK OF KOHLER