KINGSTON

TO ORDER PARTS, CALL: 1-877-252-7277
www.kingstonbrass.com

KTILD0,1,2,3,6,7,8

Universal Front or Side Mount Toilet Tank Lever

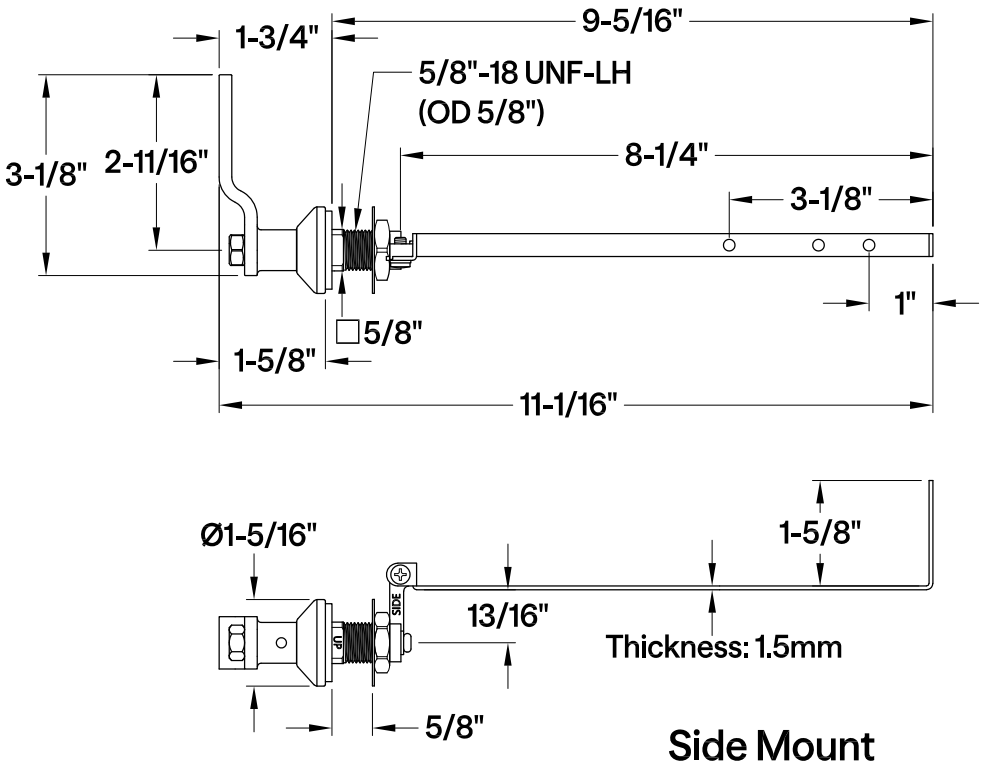

Side Mount

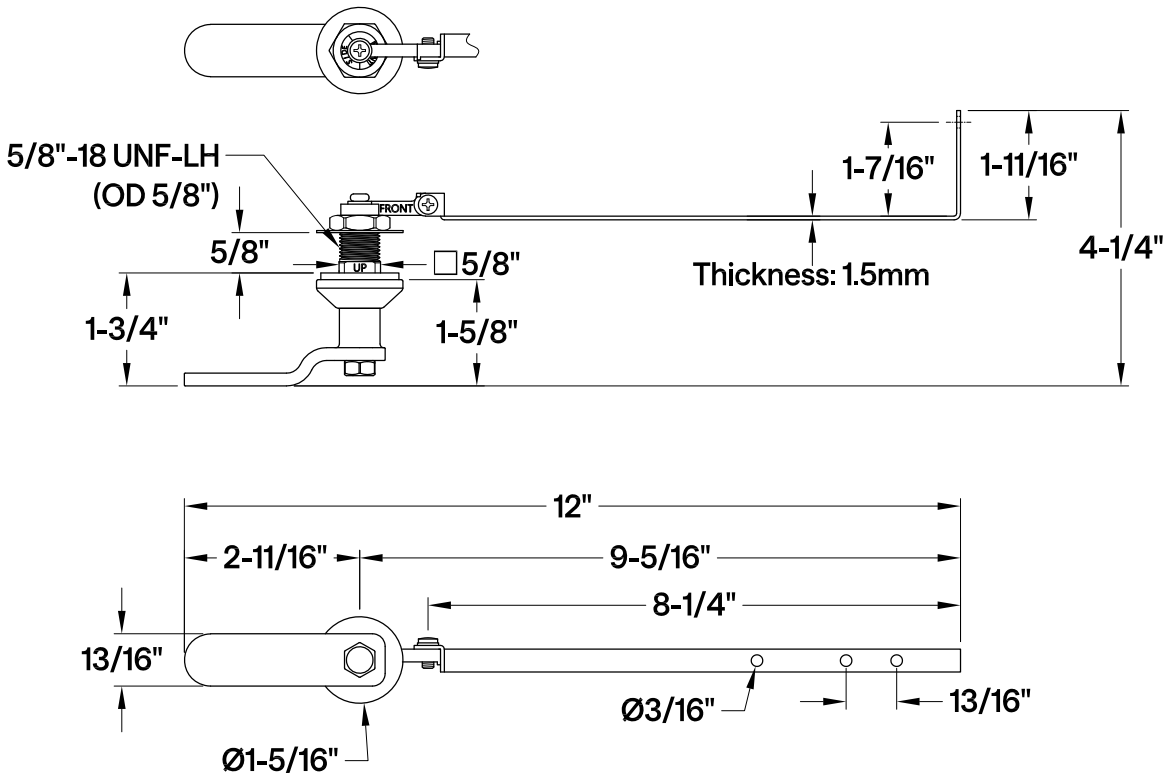

Front Mount