MAG RUSH

GUIDE BOOK

MAGNETIC TILE TRACK SET

DRIFT VORTEX™

Launch your car into the drift and watch the magnets work their magic. Dodge the floating stingray while lining up the perfect shot.

Mix with most magnetic tiles to build bigger, crazier wipeouts.

Visit **mag-rush.com/playbook** for more challenge ideas and video guides.

FOR AGES: 7+



WELCOME SET UP FINISH

ONCE UPON A PLAYDATE

Two dads, Joe and Noah, met while their kids were wrecking a perfectly clean living room. One convo led to another, and suddenly they were prototyping in a kitchen, mixing magnets, characters, and wild imagination.

Then the kids leveled up. The usual builds weren't cutting it anymore. So we built something with more speed, more chaos, more woah. Something to pull those old tiles off the sidelines.

Enter: Drift Vortex.

MAG RUSH

Mag Rush takes magnetic builds and hits the NOS. We're talking high-speed tracks, wild stunts, and setups that actually make you say "whoa."



Before you begin, here's a quick set up overview!

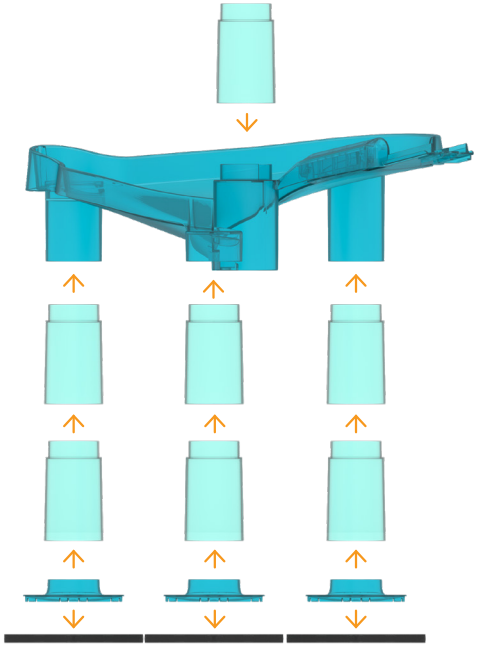

To create the main drift structure,
combine tubes, panels, and frames!

The track will need to be attached onto the drift.
Now the end of the track can attach to other tracks!

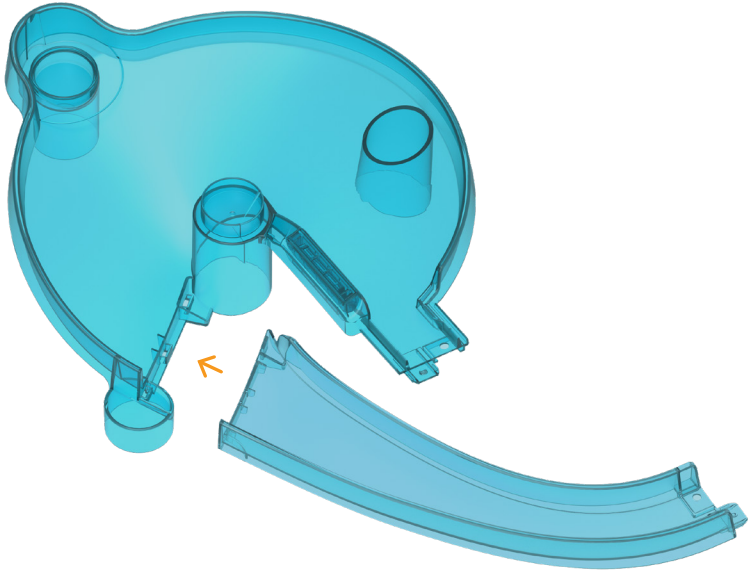

Here are some example connections.

Experiment and see what combinations you can make!

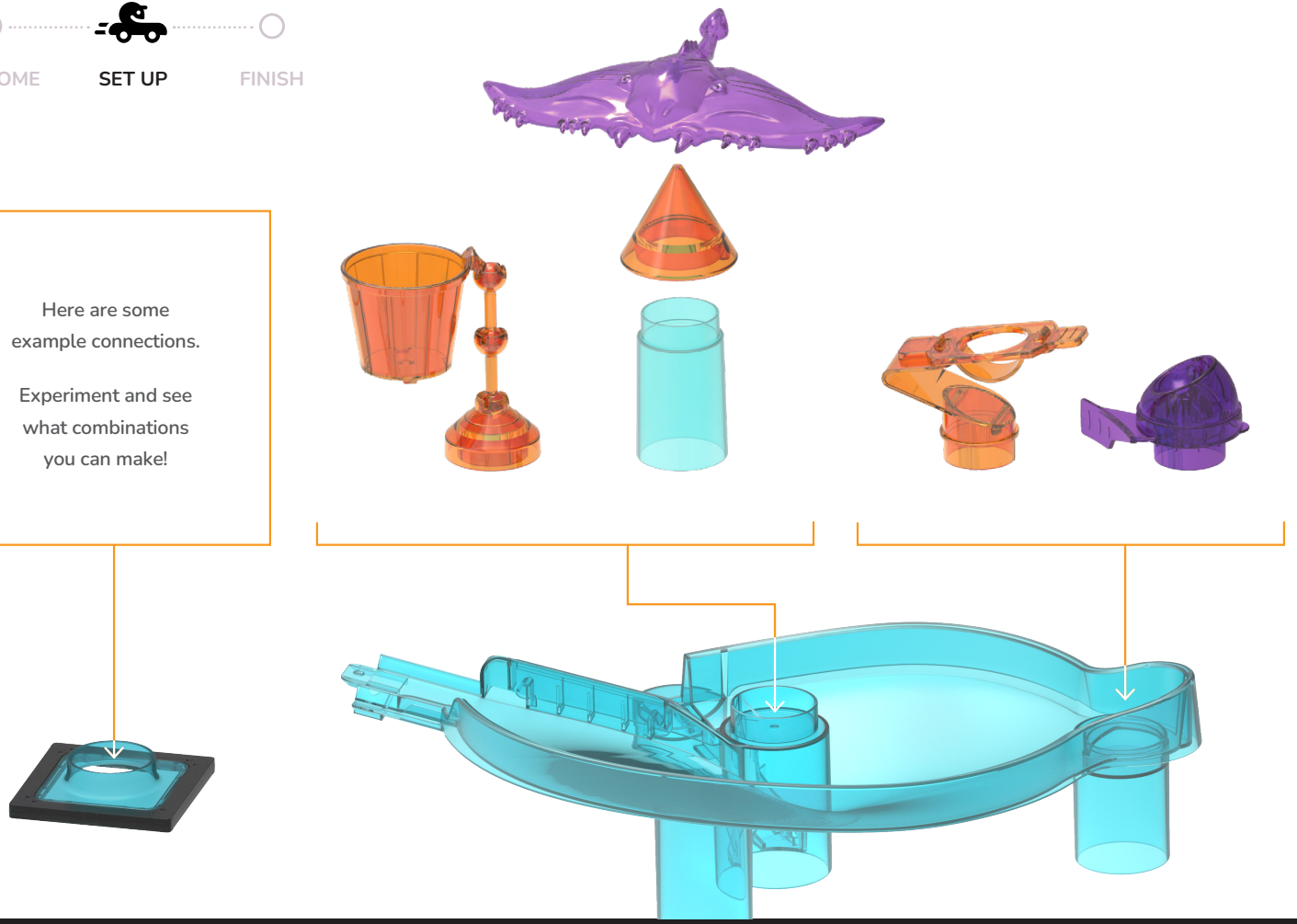

WELCOME SET UP FINISH

Use the included car which is specially equipped for drifts.



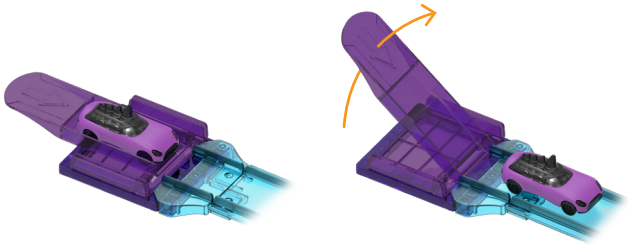

To use the lift launcher, lift the tab to start the drift.

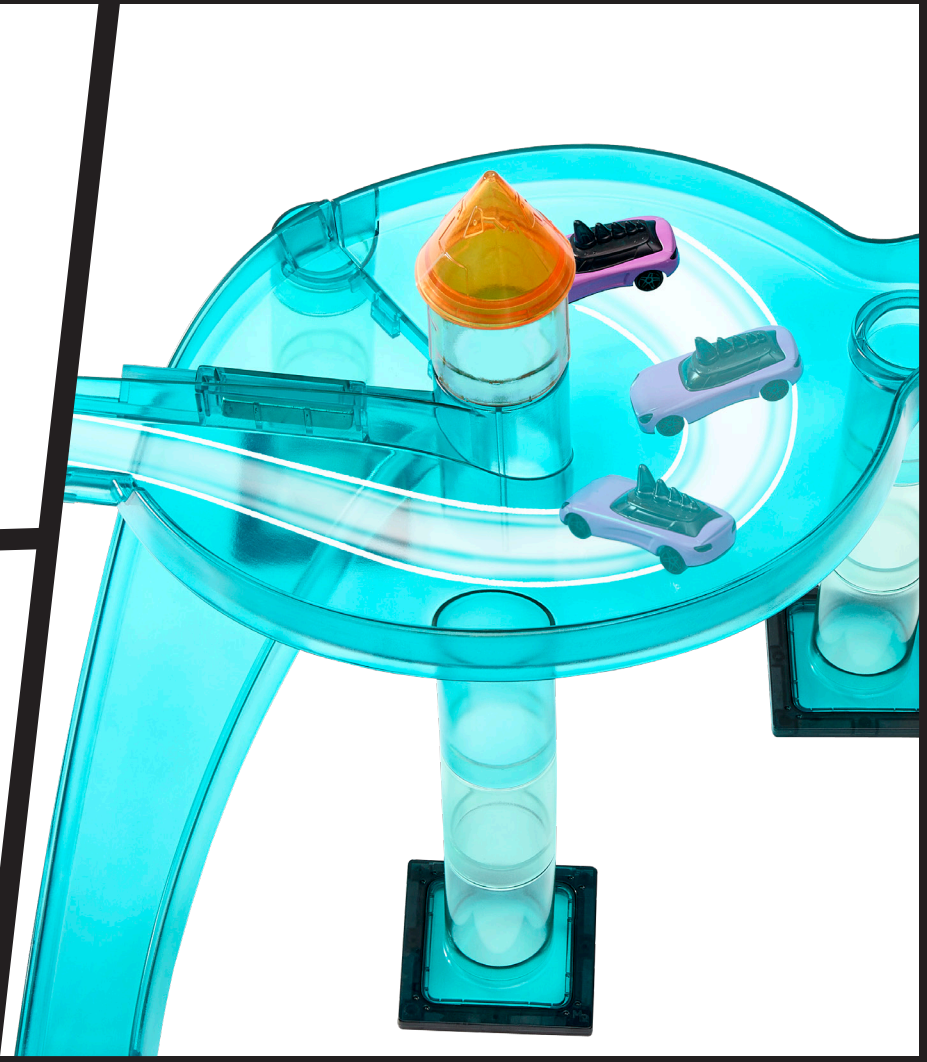

WELCOME SET UP FINISH

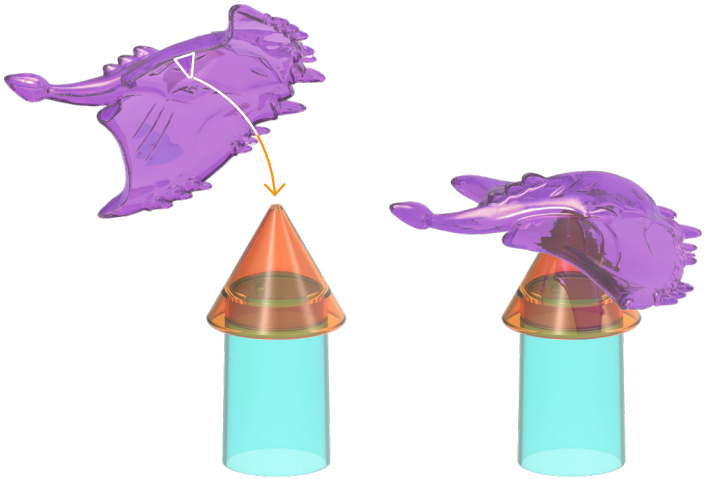

To balance the stingray,
align the pointed tip underneath the stingray
on top of the pointed tip of the orange cone.

Mix and match square colored panels.
Just snap them into frames!

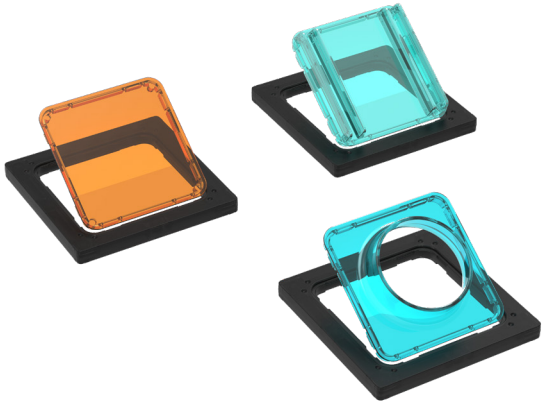



Orange barrels can stacked
and used to crash into!

You can place heads on
the indents as well!



Place the square launchers onto frames.

For best drift results, place the **two purple frames** under the lift launcher for the perfect speed.

Lift Launcher

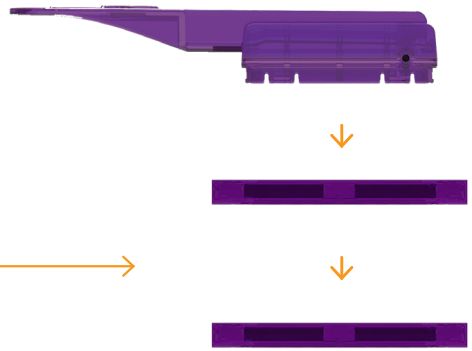

Multi-Directional Launcher

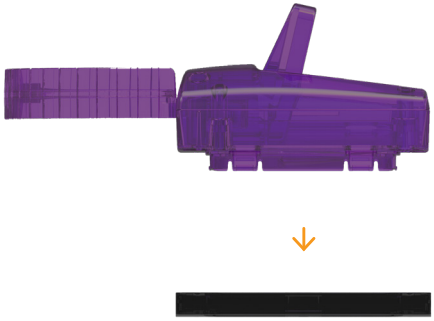

Non-magnetic connections allow tracks and launchers to connect to each other and to frames. See what other connections you can make!

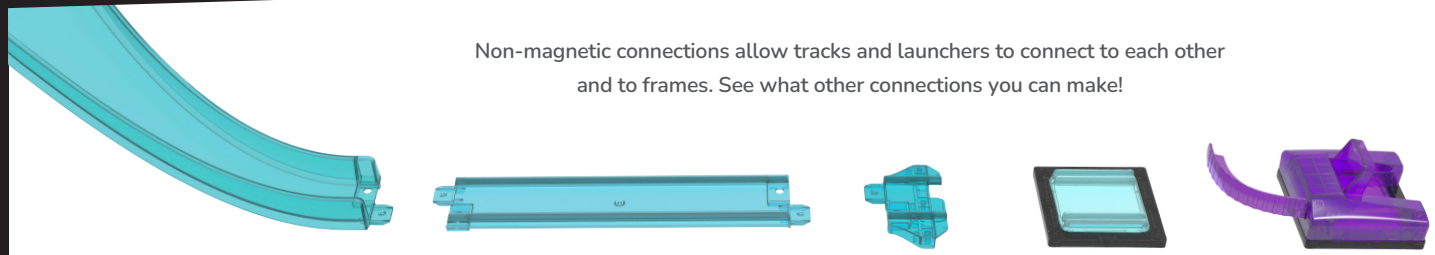

WELCOME SET UP FINISH

LOOKING FOR YOUR NEXT MOVE?

Scan the QR code to unlock **The Playbook**!

The Playbook is your online guide to wild stunt setups, tricked-out track layouts, and big-brain build moves. Copy the combos below or remix your own.

FIND US AT:

build@mag-rush.com

@mag_rush

Sign up for our Newsletter for 15% off!

www.mag-rush.com



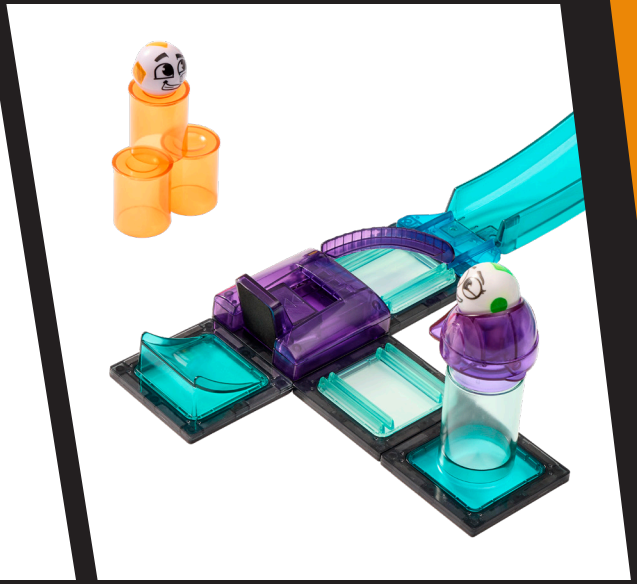

ATTENTION !

Do not submerge the product in water and never use washing machines or dishwashers to clean the product.

Do not allow children to put parts in their mouth, as there may be a risk of choking. This product contains small parts and should not be used by children under 3 years old.

If the parts break, be sure to collect all pieces and discard them immediately.

Keep the product away from objects affected by magnets, such as credit cards, watches TVs, computers, cellphones, and other electronics.

Please wipe with a dry towel if the product becomes dirty.

© 2025 Squaregles LLC. All Rights Reserved. Mag Rush, Mag Rush logo, Oggs, Oggs logo, Erggs, Erggs logo, Magnetic Building + Thrills, and associated trademarks and trade dress are owned by Squaregles LLC. Mag Rush patent information is available at mag-rush.com/patents