MONOGRAM 30" INTEGRATED CUSTOMIZABLE REFRIGERATORS (FOR SINGLE OR DUAL INSTALLATION)

ZIC303NPPII

DUAL-REFRIGERATION SYSTEM
Provides precise and customizable climate control with three independent temperature-management zones

STATEMENT AND MINIMALIST COLLECTION REFRIGERATOR HANDLES (SOLD SEPARATELY)
Designed to enhance choice and customization, Statement and Minimalist Collection refrigerators do not come with handles. Handles must be chosen separately and ordered through a Monogram representative

CONVERTIBLE LOWER DRAWER
With independent temperature controls can be used to store fresh food, frozen foods, wine or beverages

MONOGRAM UNVEILS FIRST HFC-FREE REFRIGERATOR IN THE U.S
To use a R600a refrigerant, which has a lower global warming impact than ozone-depleting hydrofluorocarbon (HFC) refrigerants commonly used in household refrigerators

FREEZER DRAWER WITH ELECTRONIC ICEMAKER
Includes a removable ice bin and scoop and accommodates everyday freezer items, such as pints of ice cream

LED INTERIOR LIGHTING
Gradually brightens and dims when door or drawer is opened and closed, providing clean white illumination that's both attractive and energy-efficient. Side and top lighting in the upper compartment enhances visibility

ADJUSTABLE GLASS SHELVES
With aluminum trim provides an elegant and uncluttered appearance

SOFT-CLOSE FREEZER AND CONVERTIBLE DRAWERS
Smoothly and quietly slide into a secure shut position

ILLUMINATED, ELECTRONIC GLASS-TOUCH CONTROLS
Make it easy to adjust interior lighting, temperature (Fahrenheit or Celsius), control lock and other settings for all three climate zones

GE WATER FILTRATION SYSTEM
Provides clean, fresh-tasting ice cubes

SABBATH MODE-CAPABLE
Allows the refrigerator to comply with Kosher practices

SELF-CLOSING VEGETABLE DRAWER
Has an innovative sliding mechanism that automatically seals the compartment shut. Two dividers can be adjusted left to right or removed completely to make room for such items as a 13" pizza or deli tray.

THREE ADJUSTABLE DOOR BINS
Make it easy to organize and access beverages, condiments and other convenience items

REMOVABLE BEVERAGE RACK
Provides a convenient space to chill wines or sparkling water

CHILD-LOCK FEATURE
Helps prevent children from changing temperature settings and causing food to spoil

MONOGRAM

SPECIFICATIONS

Overall Width	29 3/4" (75.6 cm)
Overall Height	80 3/8" (204.2 cm)
Overall Depth	23 3/4" (60.3 cm)
Door Clearance at 90°	36 3/4 in (93.3 cm)
Cutout Width	30" (76.2 cm)
Cutout Height	80" (203.2 cm) to 84" (213.4 cm) depending on door choice
Cutout Depth	25" (63.5 cm)
Plumbing Requirements	GE SmartConnect kit
Net Weight (approx)	486 lb (220.4 kg)

ATTENTION ELECTRICIAN:
A 115 volt 60Hz., 15 or 20 amp power supply is required. An individual properly grounded branch circuit or circuit breaker is recommended. For multiple unit installation, each unit requires separate individually properly grounded circuit or breaker and separate properly grounded 3-prong electrical receptacle recessed.

⚠ WARNING:
When installing appliance, you must use and follow the product installation instructions. These can be found with unit or on web at monogram.com.

OVERALL DIMENSIONS

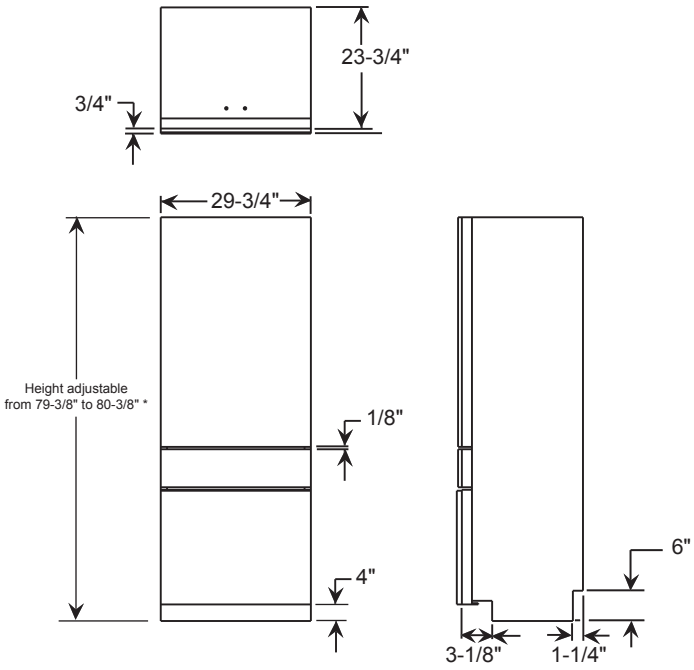

Dimensions in parentheses are in centimeters unless otherwise noted.
Actual product dimensions may vary due to manufacturing tolerances.

MONOGRAM

SINGLE INSTALLATION

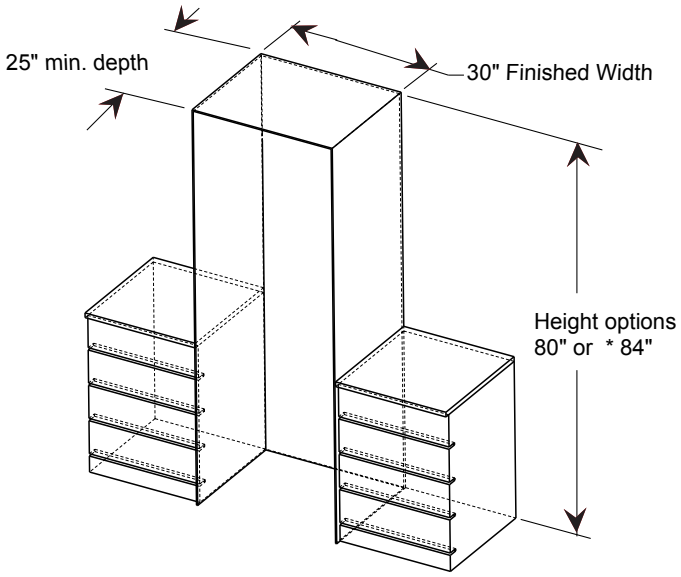

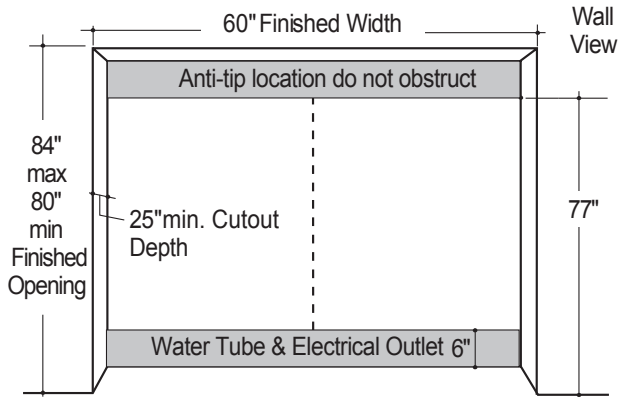

THE INSTALLATION SPACE

The finished cutout width must be 30". The cutout depth must be 25" for flush installations.

- The front face of the refrigerator fits flush with 25"depth adjacent cabinets.

ELECTRICAL

A 115V, 60Hz., 15 or 20 amp power supply is required. An individual properly grounded branch circuit or circuit breaker is recommended. Install a properly grounded 3-prong electrical receptacle recessed into the back wall. Electrical must be located on rear wall as shown.

NOTE: GFI (ground fault interrupter) is not recommended.

WATER LINE

- A cold water supply is required for automatic icemaker operation. The water pressure must be between 40 and 120 p.s.i.
- Route 1/4" OD copper or GE SmartConnect™ plastic tubing between the house cold water line and the water connection location.
- Tubing should be long enough to extend to the front of the refrigerator. Allow enough tubing to accommodate a bend leading into the water line connection.
- Water line can enter an opening through the floor or back wall.
- Install a shut-off valve between the icemaker water valve and cold water supply in the home.

NOTE: When two units are placed side by side, order heater kit ZUG30.

⚠ WARNING:
When installing appliance, you must use and follow the product installation instructions. These can be found with unit or on web at monogram.com.

This document is intended for cabinet and panel construction only.

MONOGRAM

INSTALLATION

84" HEIGHT INSTALLATION

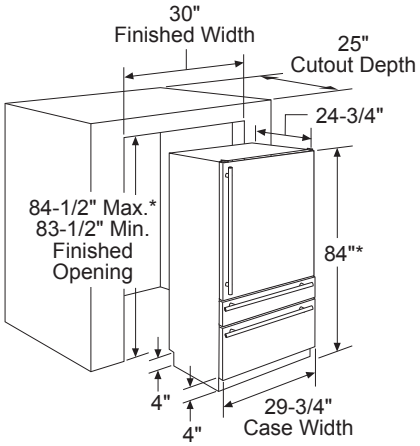

* 84" High installation. The refrigerator can be adjusted to fit into a cutout that is 83-1/2" min. to 84-1/2" max with the appropriate door kit. Use leveling legs and wheels for a maximum 1" height adjustment.

80" HEIGHT INSTALLATION

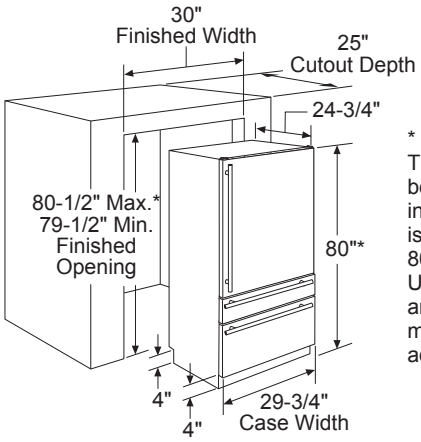

* 80" High installation. The refrigerator can be adjusted to fit into a cutout that is 79-1/2" min. to 80-1/2" max. height. Use leveling legs and wheels for a maximum 1" height adjustment.

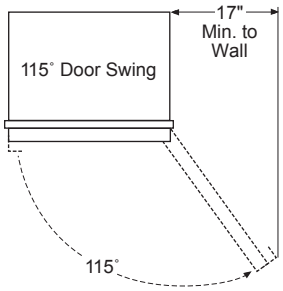

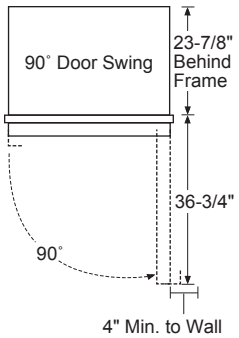

HELPFUL TIPS

CUSTOMIZATION BASICS:

This refrigerator is factory set for a right hinged door swing. The door swing is reversible. Choose an RH model with hinge on the right side; the door swings left to right. Choose an LH model with hinge on the left side; the door will swing right to left.

NOTE:

For 84" panels, the top space behind the top panel can be enclosed with wood and stained by the cabinet maker to match adjacent cabinetry.

DOOR HANDLES

Custom handles of your choice, supplied by your cabinetmaker, can be installed. If desired, you may order the Monogram Contemporary or Pro stainless steel handle kits for custom panels.

OPTIONAL ACCESSORY KITS

-ZUG30: For side-by-side installation
-Minimalist Collection Handle Kit: ZKGC3H3CNSS
-Statement Collection Handle Kit: ZKGC3H3PNSS

DOOR SWING CLEARANCES

The installation must allow for clearances to adjacent walls or cabinets. These refrigerators are equipped with a 2-position door stop. The factory-set 115° door swing can be adjusted to 90° if clearance to adjacent cabinets or walls is restricted.

Allow 17" minimum clearances for a full 115° door swing.
- 4" minimum clearance is required when the door swing is adjusted to 90°.

- See door swing illustrations to determine interaction with adjacent cabinets or countertops.

MONOGRAM

INSTALLATION

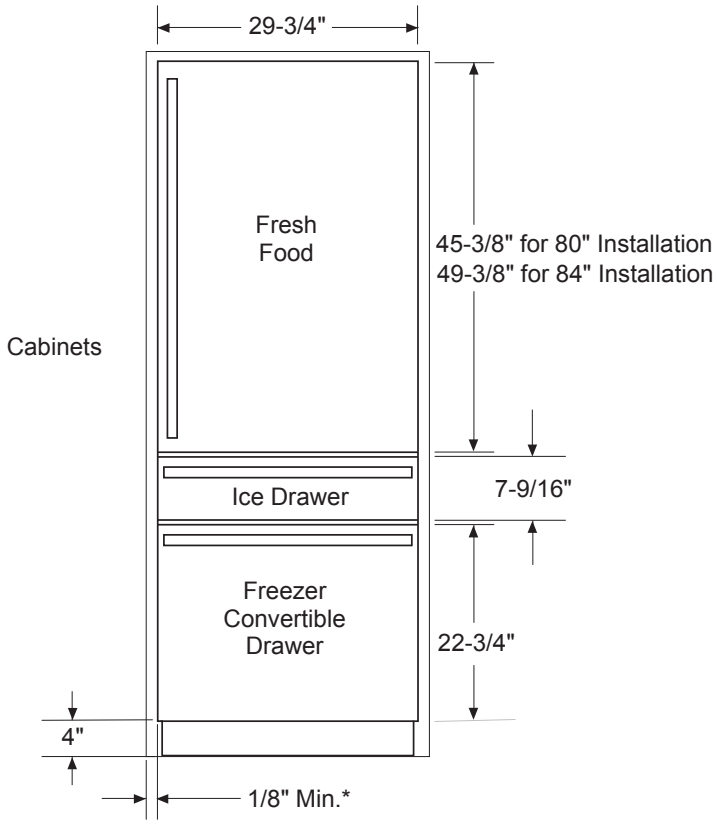

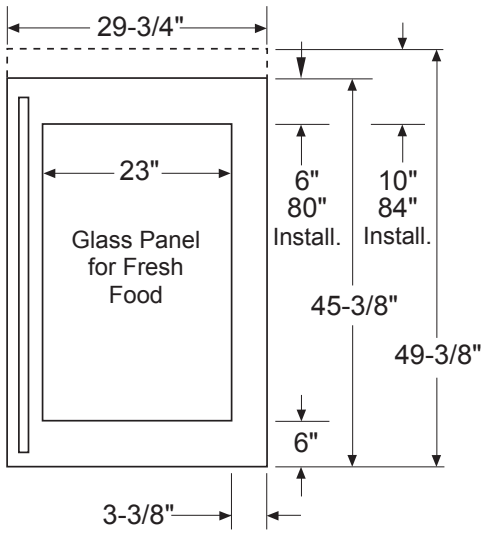

MAKE YOUR DOOR AND HANDLE CHOICE

This refrigerator does not come with a door, so you will need to choose a door panel option at time of purchase. Once you have chosen a door, you will then need to pick a handle kit from the Minimalist or Statement Collection.

SS PANEL ACCESSORY & DIMENSIONS

3/4"-Thick Solid Door Panel Options
For 80" High Installation

- LH Solid SS Door - Model ZKSSN809NLH
- RH Solid SS Door - Model ZKSSN804NRH

For 84" High Installation the door panel is not reversible for the 84" installations. A left or right hand door panel accessory must be purchased.

- LH Solid SS Door - Model ZKSSN849NLH
- RH Solid SS Door - Model ZKSSN844NRH

NOTE: Each kit also contains matching freezer and customizable drawer panels and toekick.

OPTIONAL ACCESSORY KITS#:

- Side-by-Side Installation Kit - ZUG30
- Minimalist Collection Handle Kit: ZKGC3H3CNSS
- Statement Collection Handle Kit: ZKGC3H3PNSS

MONOGRAM

DUAL PRODUCT CLEARANCES

80" HEIGHT INSTALLATION

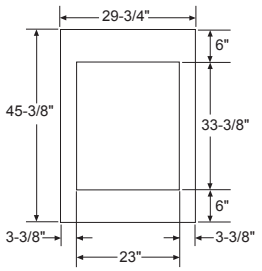

PANELS FOR GLASS DOOR

IMPORTANT NOTE:
Maximum panel weight:
A–Fresh Food Door Panel: 33 lbs.
B–Freezer Door Panel: 9 lbs.
C–Convertible Food
Door Panel: 19 lbs.

DESIGN TIP: Some amount of each panel will be visible on the interior side of the unit. It is recommended that both sides of each panel be finished.

DESIGN TIP: If using custom panels, a custom toe kick should be considered. The bottom of case is white.

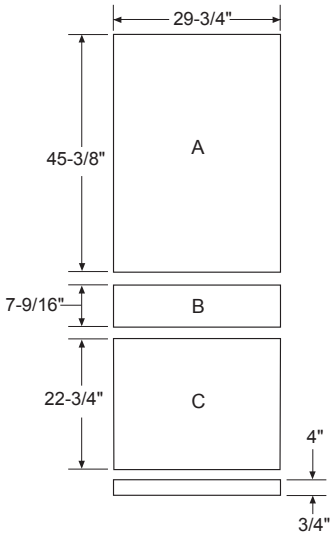

PANELS FOR SOLID DOOR AND DRAWERS

84" HEIGHT INSTALLATION

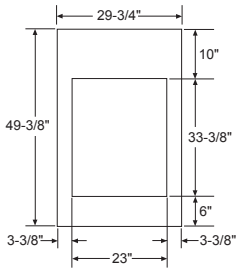

PANELS FOR GLASS DOOR

IMPORTANT NOTE:
Maximum panel weight:
A–Fresh Food Door Panel: 33 lbs.
B–Freezer Door Panel: 9 lbs.
C–Convertible Food
Door Panel: 19 lbs.

DESIGN TIP: Some amount of each panel will be visible on the interior side of the unit. It is recommended that both sides of each panel

DESIGN TIP: If using custom panels, a custom toe kick should be considered. The bottom of case is white.

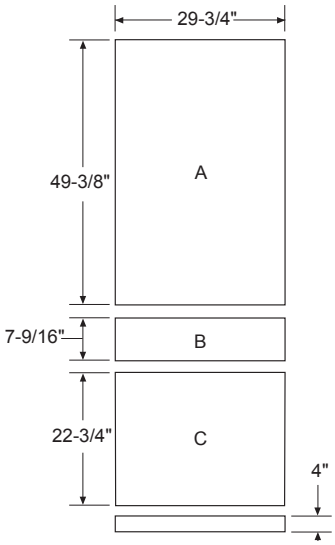

PANELS FOR SOLID DOOR AND DRAWERS

INTEGRATED INSTALLATION

3/4" CUSTOM PANEL DIMENSIONS:
80" High Fully Integrated Installation
If you choose to install custom panels, they must be cut to the dimensions shown.

84" HIGH FULLY INTEGRATED INSTALLATION
If you choose to install custom panels, they must be cut to the dimensions shown. The panels will attach to the door and drawers using a hook and bracket system. The top space behind the top panel can be enclosed with wood and stained by the cabinet maker to match adjacent cabinetry.

NOTE: This product is designed to handle 3/4" panels that are made of wood. 33-3/8" x 23" is the maximum opening for a glass window. The opening may be smaller if desired.

MONOGRAM

DIMENSIONS AND INSTALLATION INFORMATION (IN INCHES)

SS OR CUSTOM PANELS TOP VIEW
115° DOOR SWING (FACTORY SETTING)

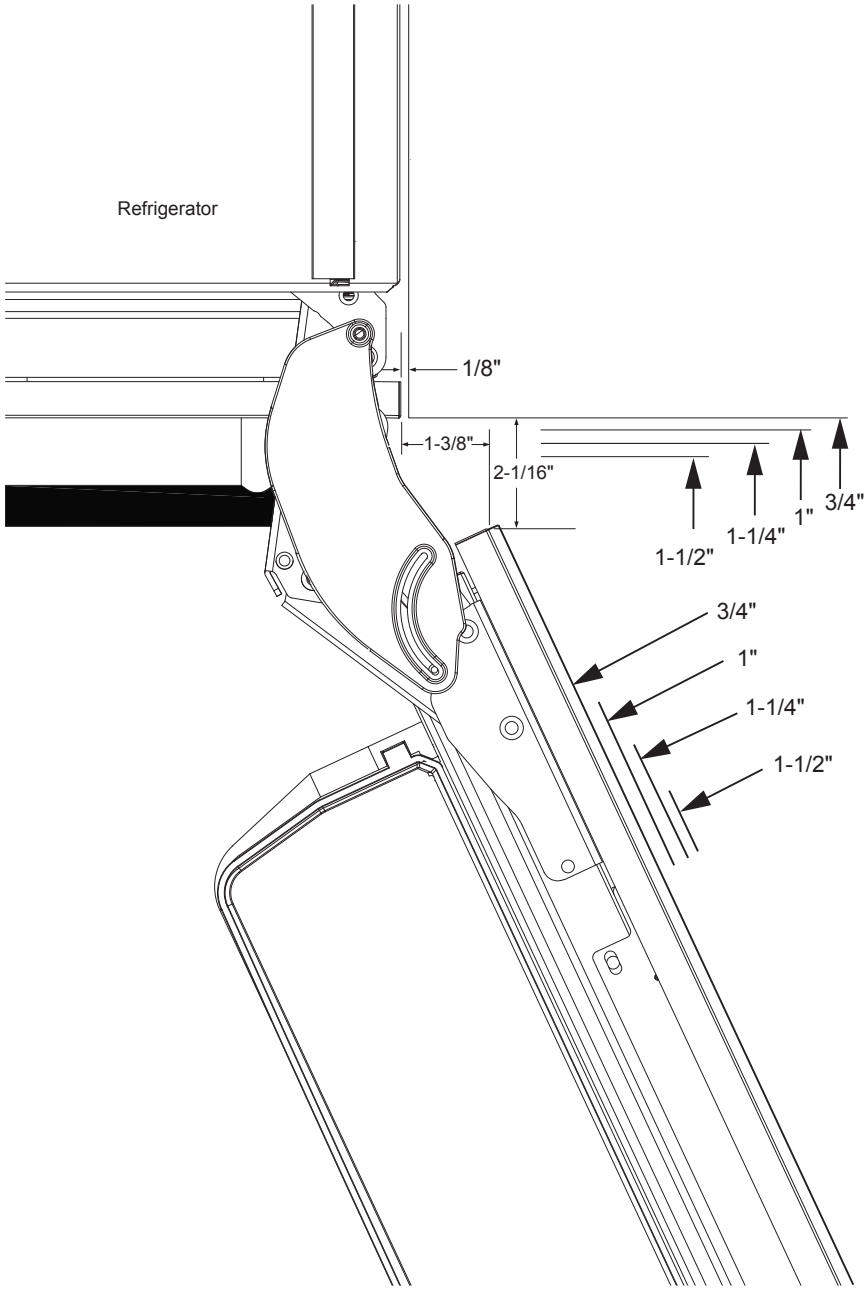

ADVANCE PLANNING

Use this page to determine door swing interaction with adjacent cabinets or countertops.

PRODUCT CLEARANCES

These refrigerators are equipped with a 2-position door stop. The factory-set 115° door swing can be adjusted to 90° if clearance to adjacent cabinets or walls is restricted.

MONOGRAM

DIMENSIONS AND INSTALLATION INFORMATION (IN INCHES)

SS OR CUSTOM PANELS TOP VIEW
90° DOOR SWING (FACTORY SETTING)

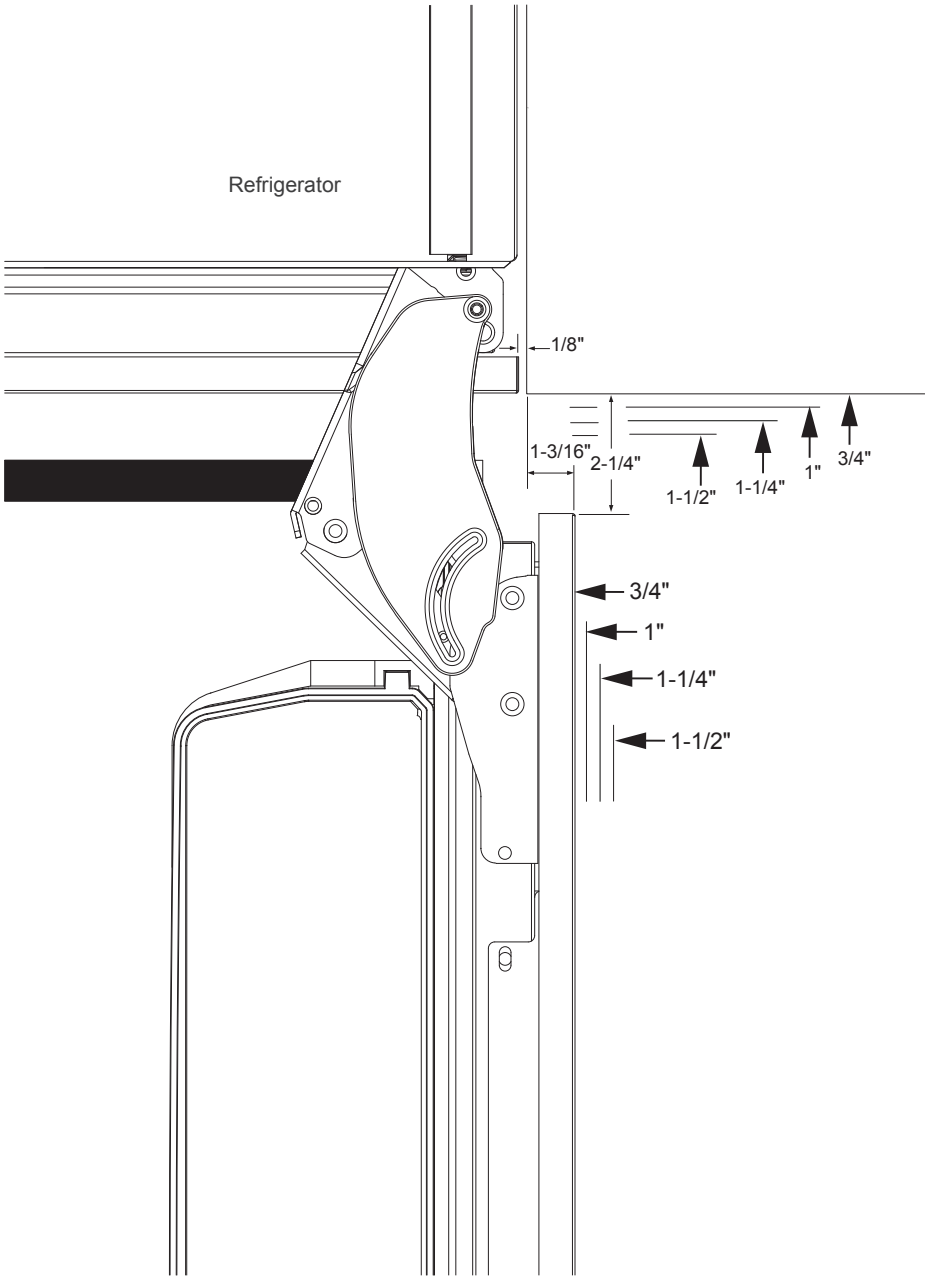

ADVANCE PLANNING

Use this page to determine door swing interaction with adjacent cabinets or countertops.