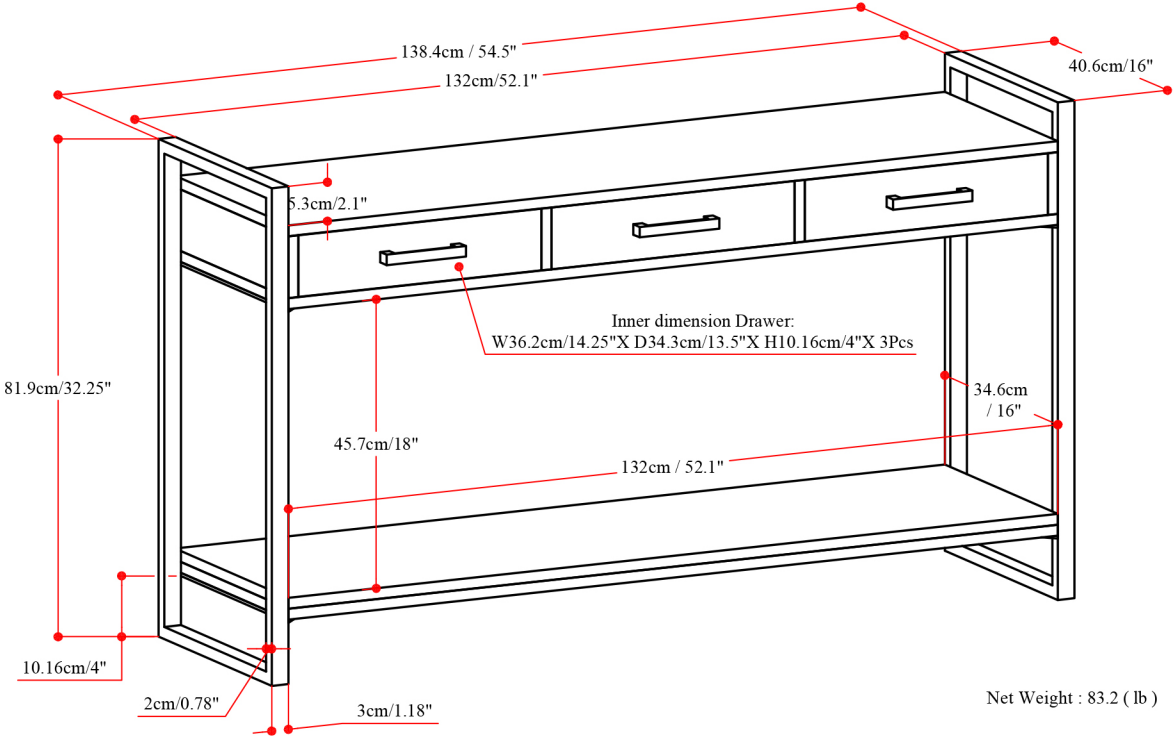

Net Weight : 83.2 (lb)