KINGSTON

TO ORDER PARTS, CALL: 1-877-252-7277
www.kingstonbrass.com

KMS3022M38

30" x 22" Carrara Marble Vanity Top with Oval Sink

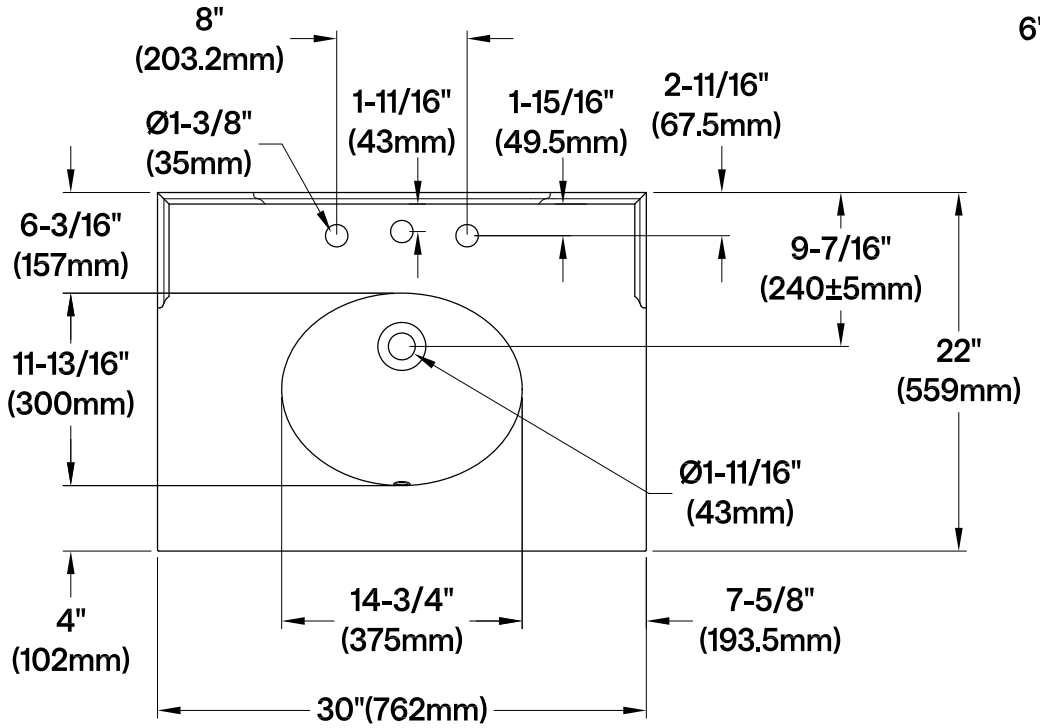

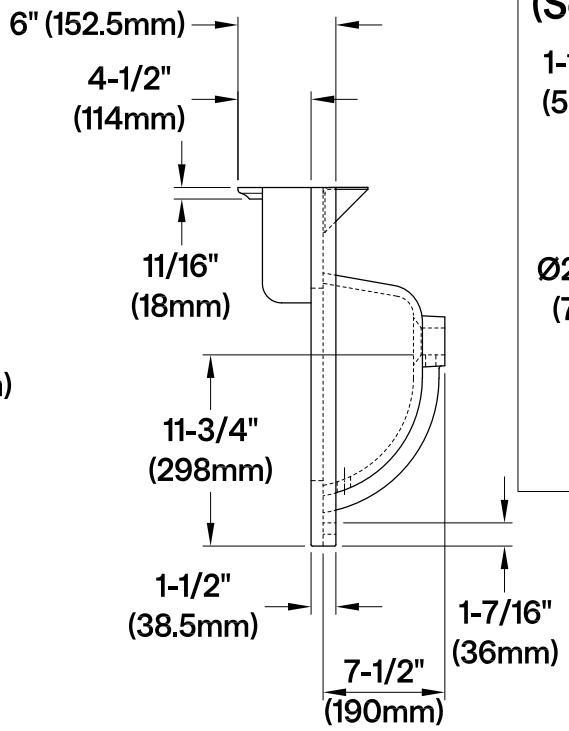

Drain Hole Size
(Scale 2:1)

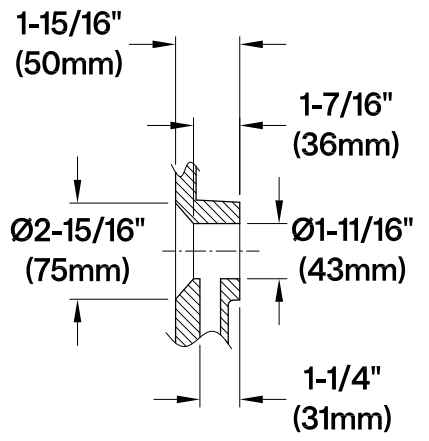

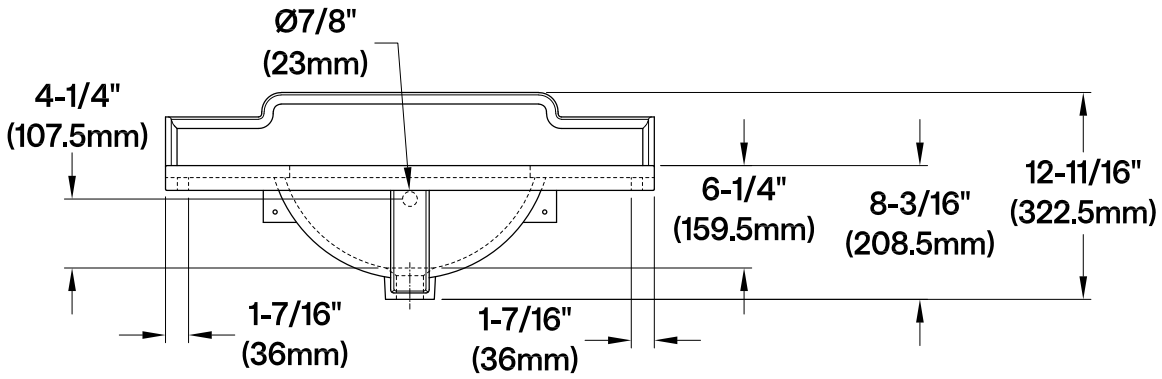

VSPLBRKT (1 pc)

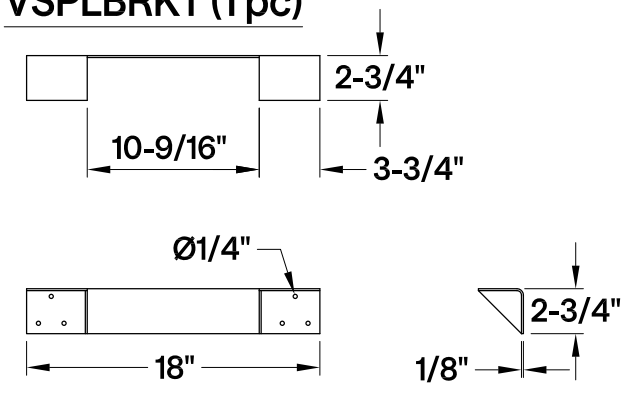

2026-05-A