CC1086T1,CC1085T2,5,8
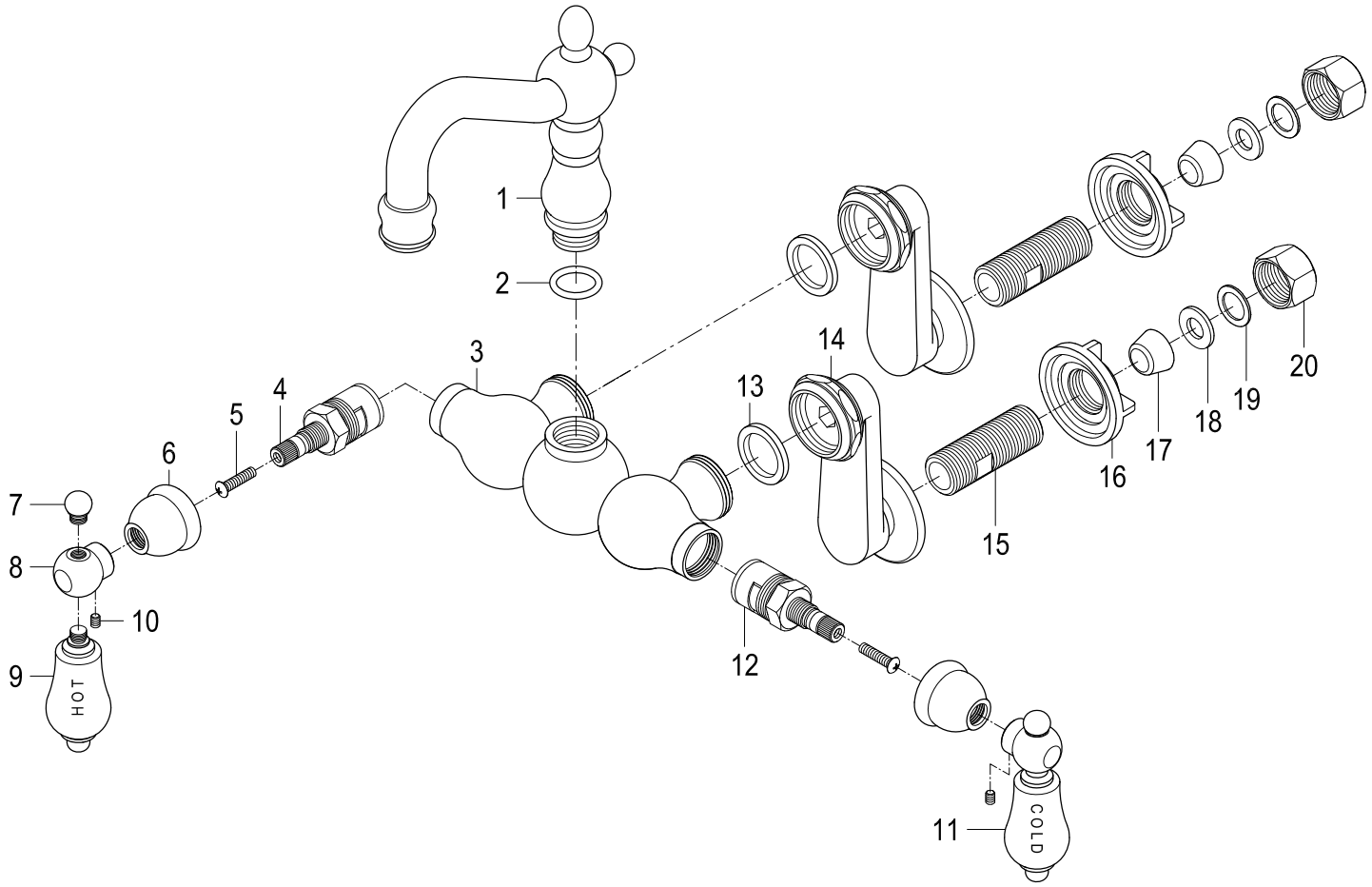
Wall Mount Tub Filler