Freestanding Vanity

INSTALLATION INSTRUCTIONS

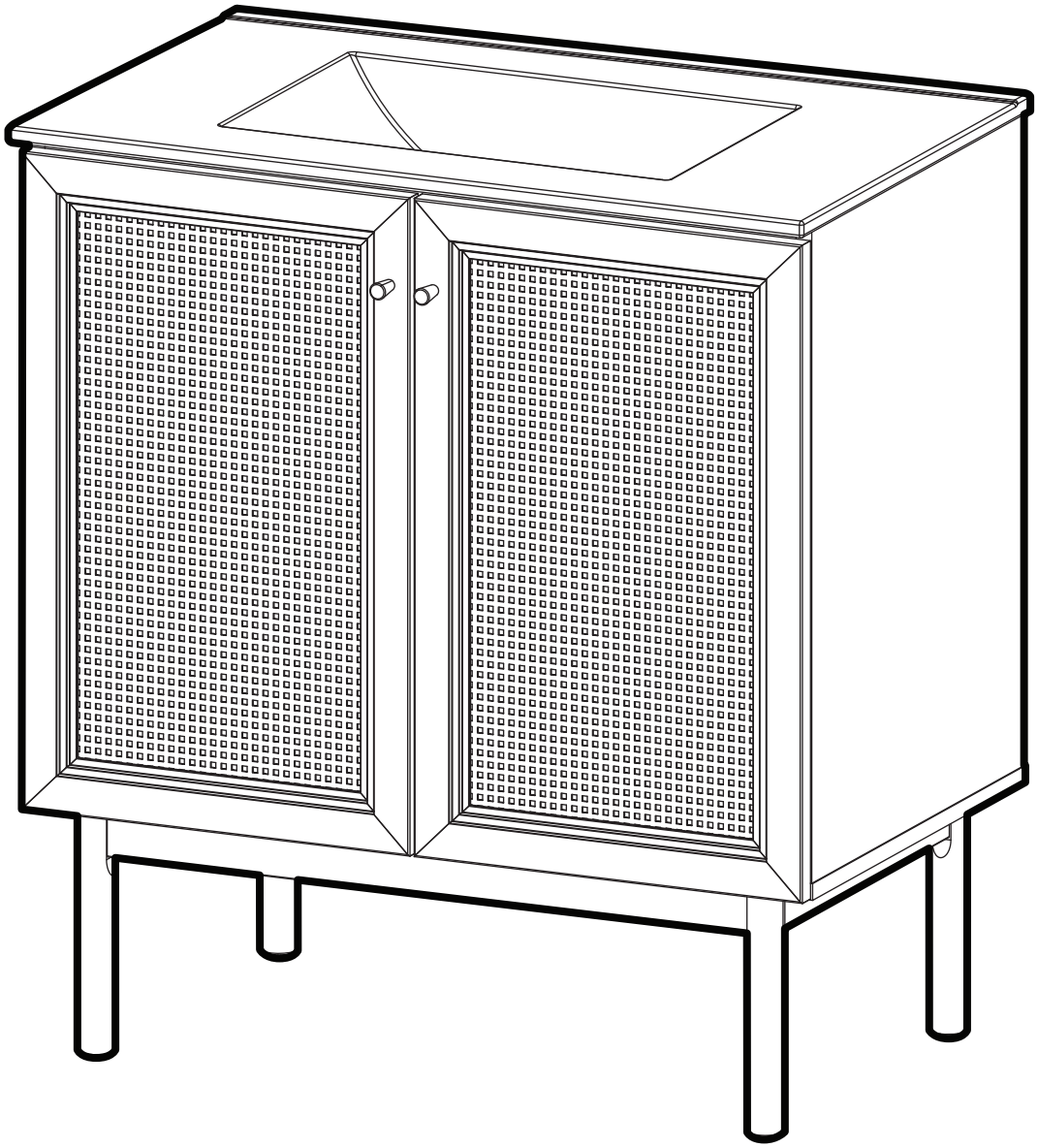

PRIOR TO INSTALLATION:

- Inspect product to ensure no damages have occurred while in shipping.
- Observe all plumbing and building codes in accordance with your state and local requirements.
- Floor must be level prior to installation of vanity.
- All dimensions are nominal! Be sure to measure your vanity prior to installation.
- The step-by-step guidelines in the installation instructions are a general reference. Should there be any discrepancies, Swiss Madison cannot be held liable. It is recommended to install all Swiss Madison products by hiring a licensed professional.
- Read installation and maintenance instructions thoroughly before installing. Be sure to use proper tools and always wear proper personal safety accessories for your protection.

QUESTIONS OR CONCERNS?

Please contact us:

1-434-623-4766

info@swissmadison.com

INCLUDED PARTS:

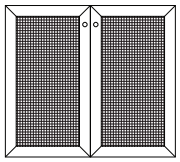

Vanity Base

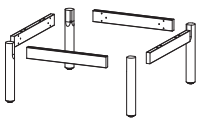

Leg Set

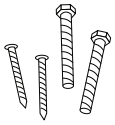

Hardware

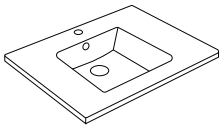

Vanity Sink

SUGGESTED TOOLS & MATERIALS:

Safety Glasses

Gloves

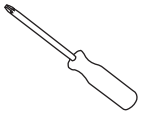

Screwdrivers

Silicone

Drop Cloth

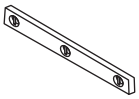

Level

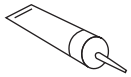

Adhesive

Drill

Parts for Reference:
1. Base panel
2. Left side panel
3. Right side panel
4. Front cross bar
5. Side leg connecting boards (2)
6. Front leg connecting boards (2)
7. Rear top bar
8. Rear bottom bar
9. Left door
10. Right door

A. Cam bolt
B. Cam lock
C. Wooden dowel
D. Allen key (2)
E. Screws M 7 x 50 mm
F. Locking nuts
G. Screws M 4.5 x 12.5 mm
H. Wrench
I. Screws M 6.4 x 53 mm
J. Screws M 4 x 22 mm for handles
K. Handles (2)
L. Foam pad

BC410: Leg frame bracket (4)
HS26A: Hinge (4)
BC67: Corner brace (4)
LC22B2: Leg (4)

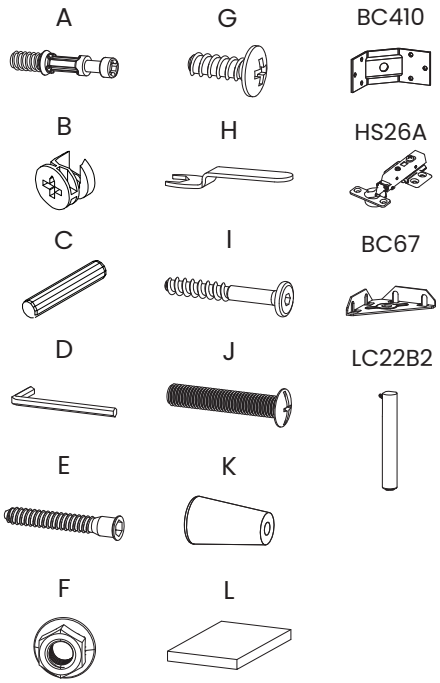

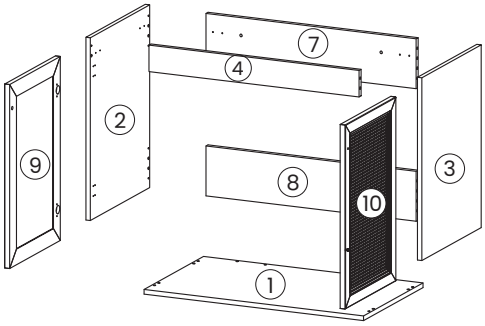

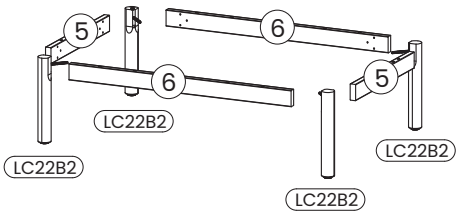

1 Prepare Frame

- Insert 2 wooden dowels (C) and 4 screws (G) into the front cross bar (4) as shown.
- Insert 4 wooden dowels (C) and 4 screws (G) into the rear top bar (7) as shown.
- Insert 6 wooden dowels (C) into the rear bottom bar (8) as shown.
- Tighten all screws into their respective wooden bars. Be sure to leave about 2-3 mm of the screw exposed above the board. Be careful not to overtighten.

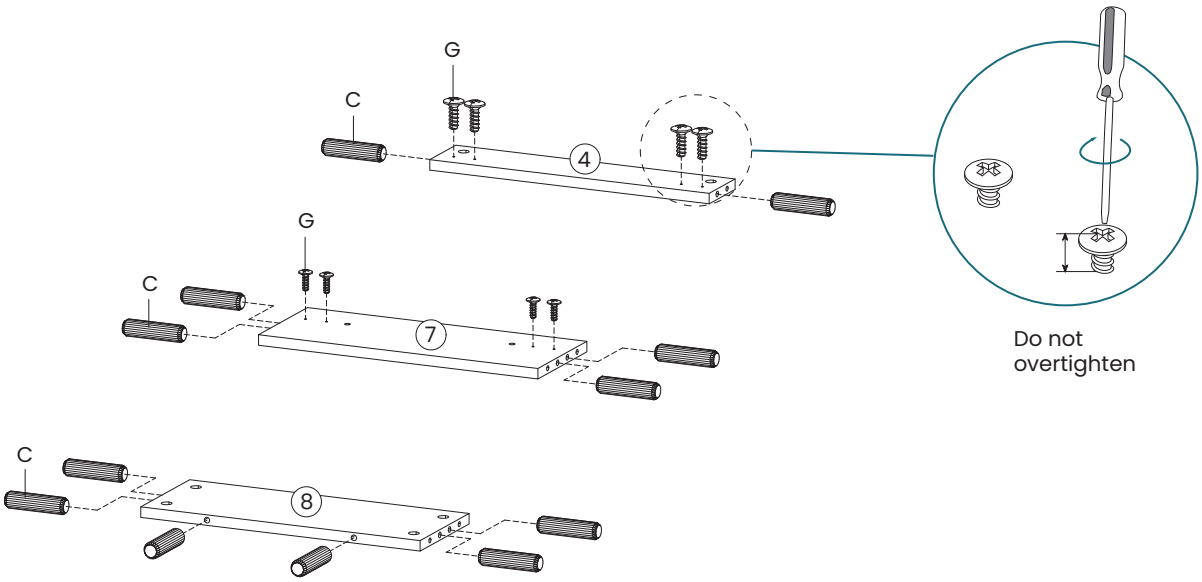

2 Prepare Side Panels

- Screw 5 cam bolts (A) into the left side panel (2). Repeat for the right side panel (3).
- Insert 2 wooden dowels (C) into the left side panel (2) as shown. Repeat for the right side panel (3).
- Screw 4 screws (G) into the right left panel (2) as shown, being careful to not overtighten. Leave about 2-3 mm of the screw exposed above the panel. Repeat for the right side panel (3).

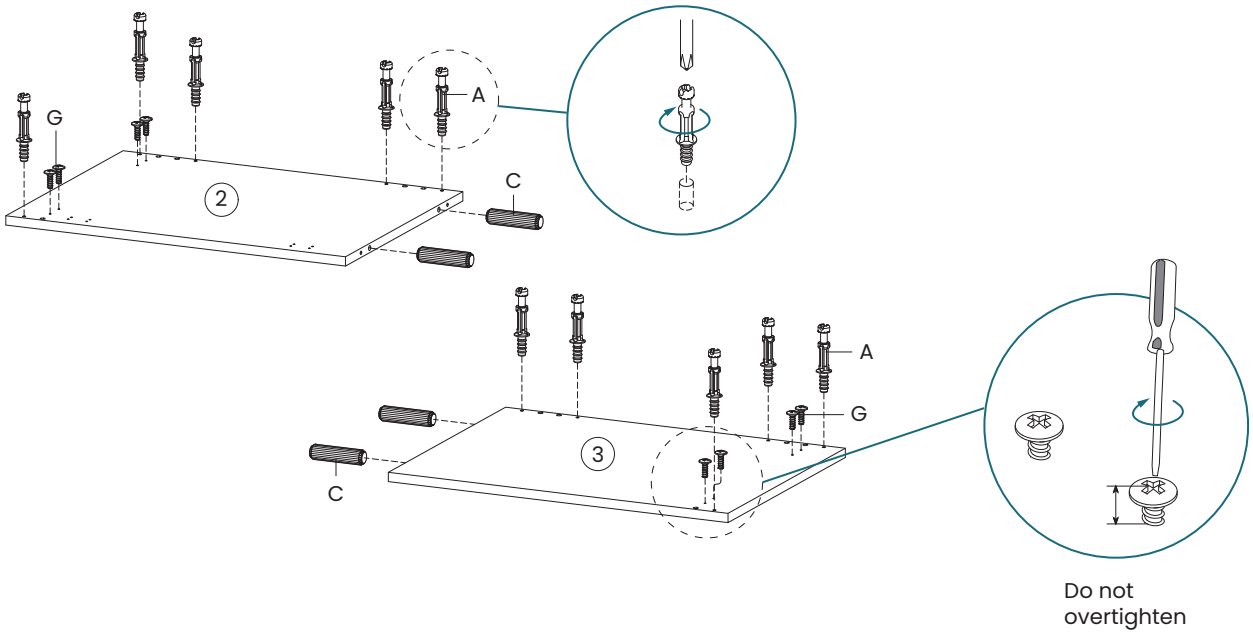

3 Assemble Frame

- Use 5 cam locks (B) to attach the left side panel (2) to the front cross bar (4), rear top bar (7) and rear bottom bar (8).
- Repeat for the right side panel (3).

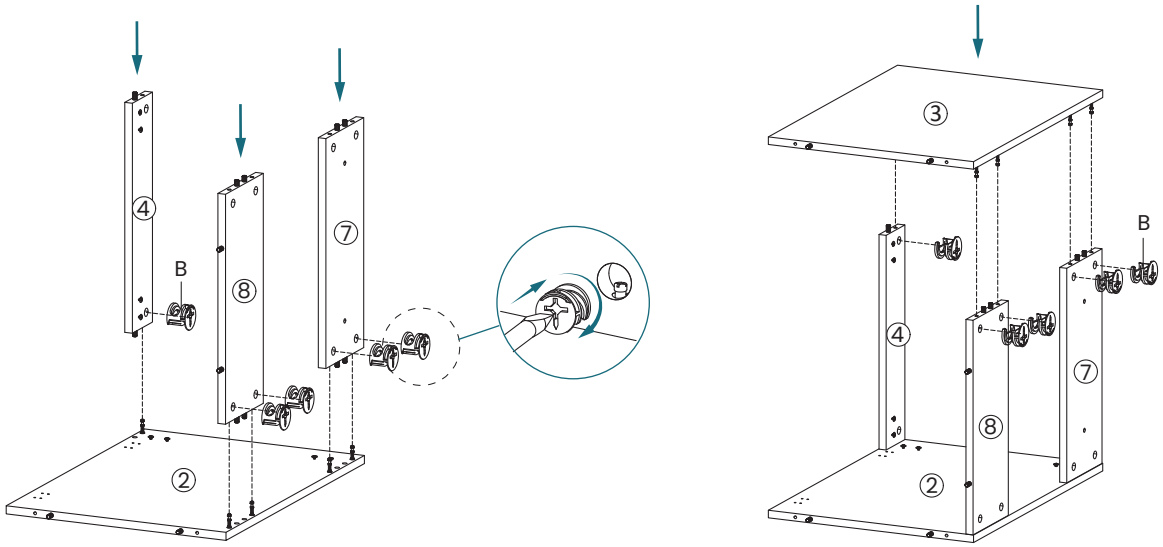

4 Attach Base

- Place the base panel (1) onto the cabinet frame as shown.
- Insert 6 screws (E) into the base panel as shown. Using an allen key (D), secure the base into place.

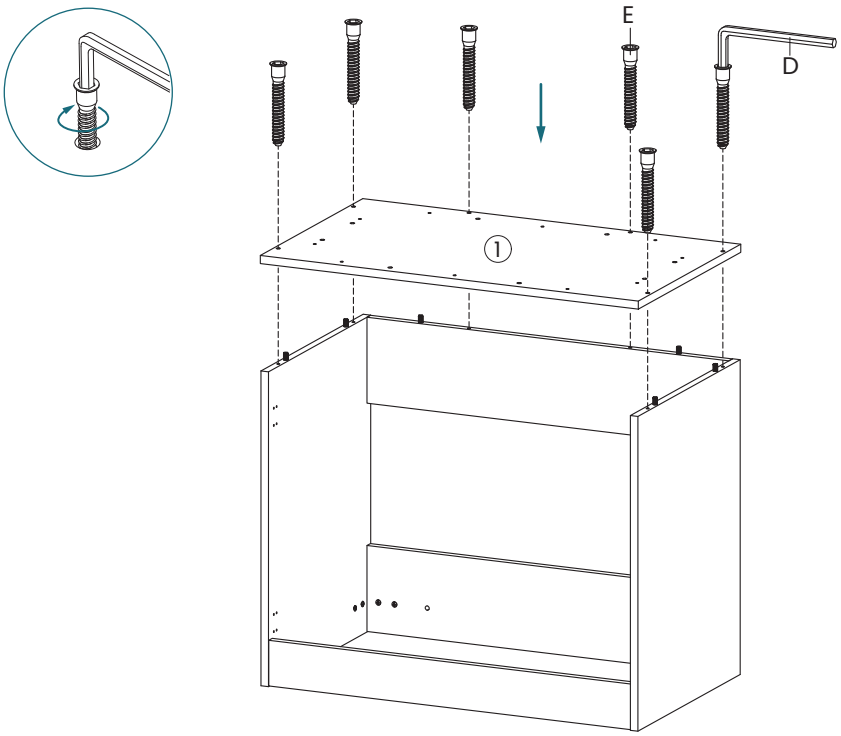

5 Assemble Leg Frame

- Connect bracket (BC410) to the left and right side of the side leg connecting board (5).
- Use 6 screws (G) and secure into place as shown. Be careful to leave about 2 mm of clearance between the screw head and bracket (BC410).
- Repeat these steps with the other side leg connecting board (5).
- Connect the sides together by using a front leg connecting board (6) and 6 screws (G) as shown. Repeat this step with the remaining front leg connecting board (6) and an additional 6 screws (G) to the other side. Make sure to leave about 2 mm of clearance between the screw head and the bracket (BC410).

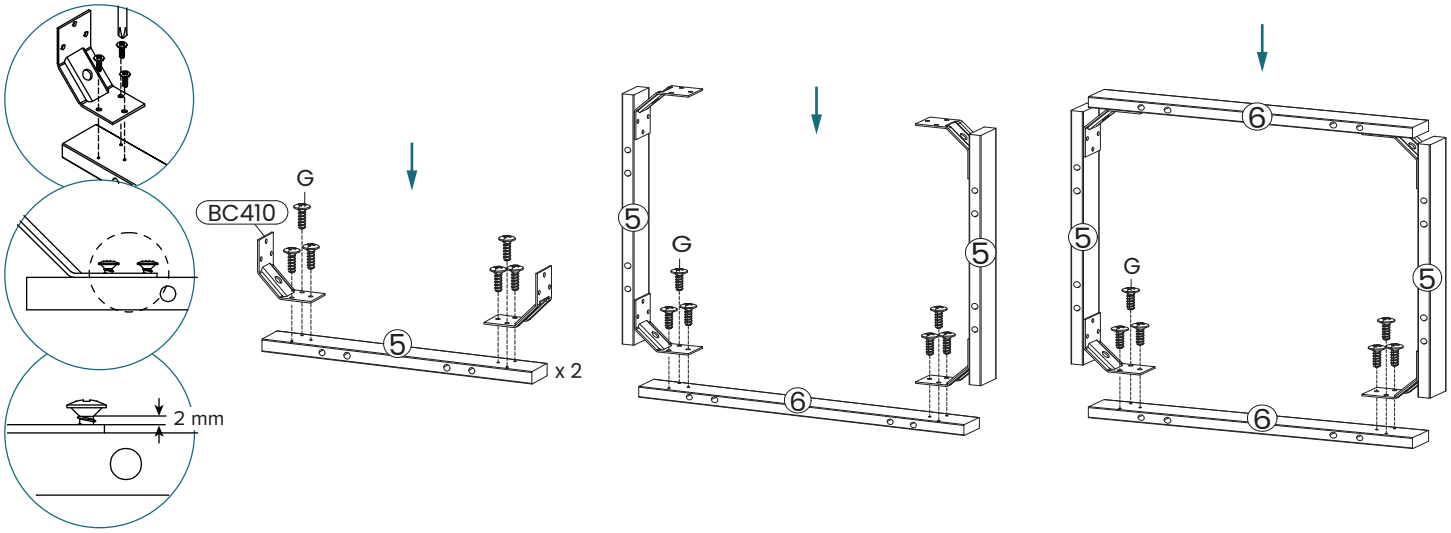

6 Install Leg Frame

- Insert 8 wooden dowels (C) into the leg frame as shown.
- Attach the leg frame to the base panel (1) by sliding the wooden dowels into the base.
- Insert 10 screws (I) into the leg frame as shown. Using an allen key (D), tighten each screw fully to secure the frame into place.

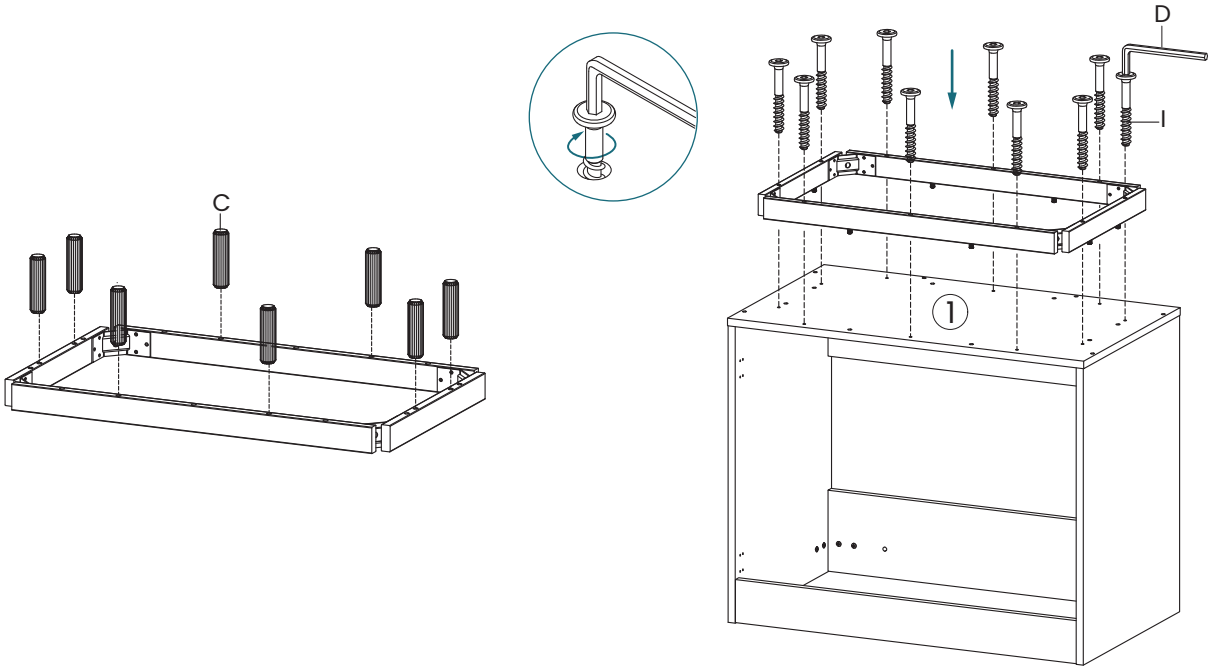

7 Install Legs

- Take a leg (LC22B2) and remove the cover from the peg as shown. Repeat for all 4 legs.
- Insert the peg into the open hole of the bracket (BC410) as shown. Secure using locking nuts (F). Using the wrench (H), tighten the nut (F) to secure the leg into place. Repeat for all legs.
- Once legs are secured in place, use a screwdriver to tighten all screws (G) around the leg frame.

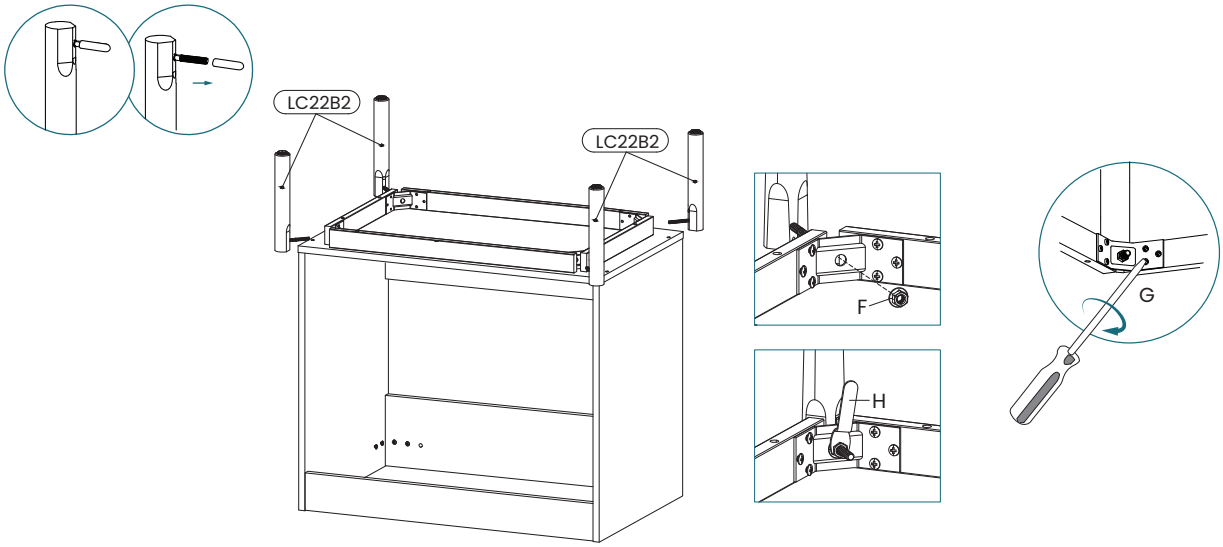

8 Prepare Cabinet for Installation

- Insert corner brace (BC67) into the corner of the cabinet as shown. Tighten all screws to secure into place. Repeat for the last 3 corners using an additional 3 corner braces (BC67).
- Using the levelers on the bottom of the legs, adjust the height as needed. Use a level to verify that the adjusted cabinet height is level on all sides.
- Optional: Remove the backing of a foam pad (L). Place the foam pad sticky side down onto the top of the cabinet as shown. Repeat with all foam pads (L), placing them evenly around the perimeter of the cabinet top.

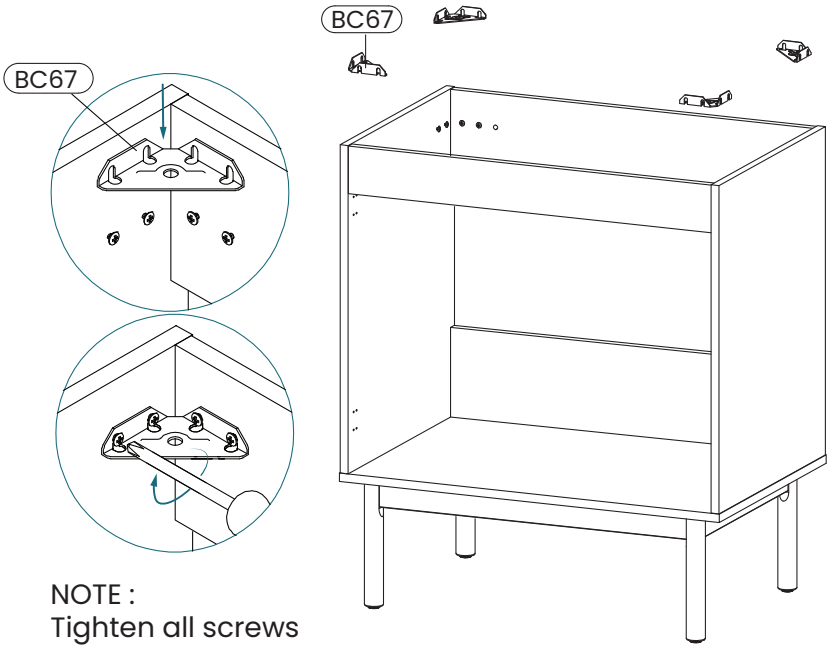

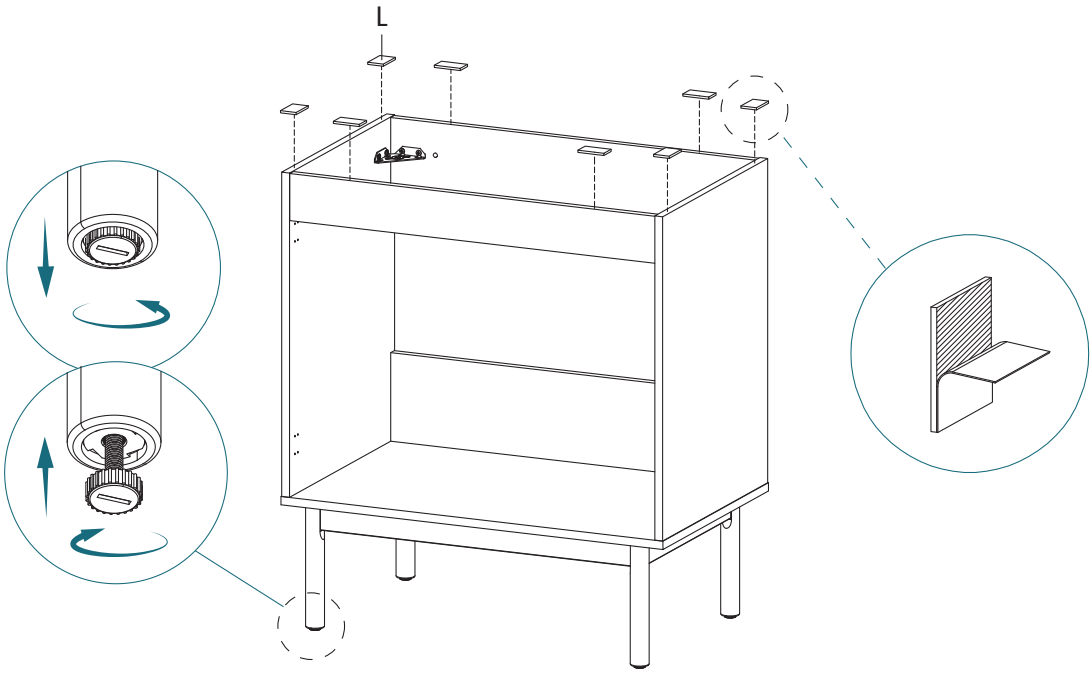

9 Secure Vanity to Wall

• Select installation method from below. Please note that mounting hardware is not supplied with this vanity.

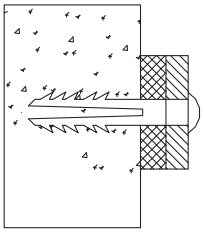

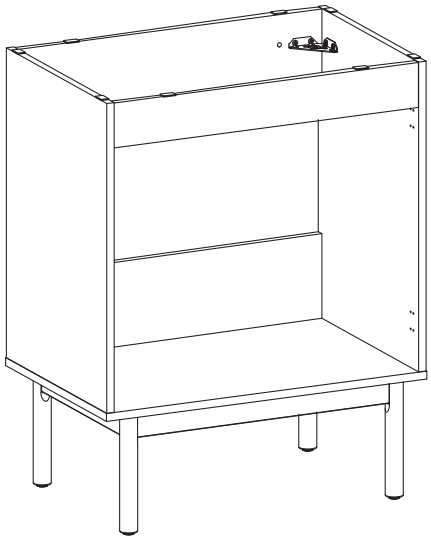

Option 1: Securing to Drywall

· Position cabinet against wall in desired location.
· Using a pencil, make a mark on the wall through the holes in the rear top bar (7).
· Move cabinet away from the wall. Create a pilot hole in each mark on the wall, then insert a plastic anchor.
· Place cabinet against the wall, insert a screw through the rear top bar (7) into each hole in the wall, then tighten to plastic anchors to secure the vanity.

Option 2: Securing to Drywall & Wood Stud

· Position cabinet against wall in desired location, be sure desired mounting location aligns with existing wood studs.
· Insert mounting screw through the hole in the rear top bar (7), then tighten through the drywall into the wooden stud. Repeat this step for the side to secure the vanity.

10 Vanity Top Installation

· Install faucet and drain according to manufacturer's installation instructions. Do not overtighten, this may cause the sink to crack.
· Set the vanity top on top of the vanity base, checking the location of the p-trap and drain.
· Remove vanity top from vanity base. Apply a thin bead of silicone around the vanity base and set the vanity top carefully in place.
· Remove excess silicone with a wet cloth.

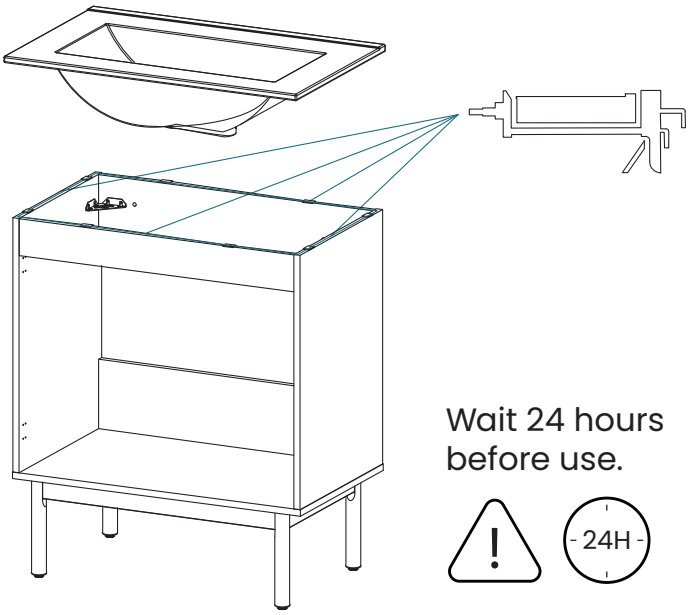

Wait 24 hours before use.

11 Attach Doors

- Install 2 hinges (HS26A) to both the left door (9) and the right door (10) using 2 screws (G) per hinge.
- Use an additional 2 screws per hinge to attach the left door (9) and right door (10) to the cabinet. If the door does not align properly, adjust the hinges according to the diagrams below. Once adjustments have been completed, secure the hinges using 2 screws (G) each.
- Install the handles (K) to the doors using the handle screws (J).

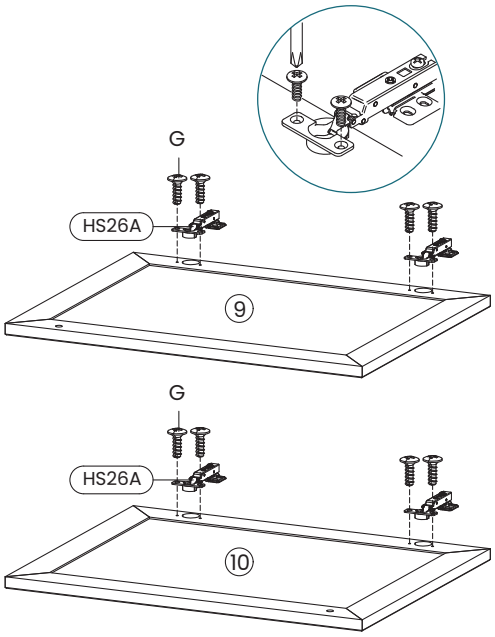

Before adjustments:

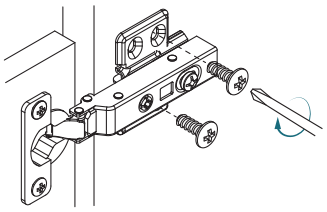

After adjustments:

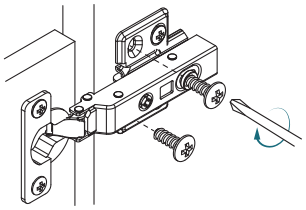

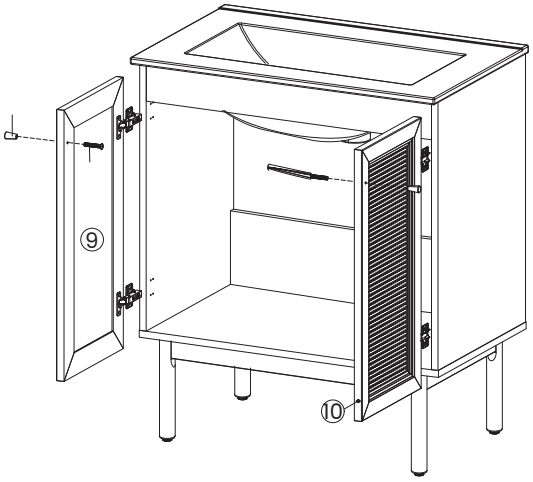

Hinge/Door Adjustment and Realignment

- If adjustment or realignment is needed, follow the instructions provided in the following chart.

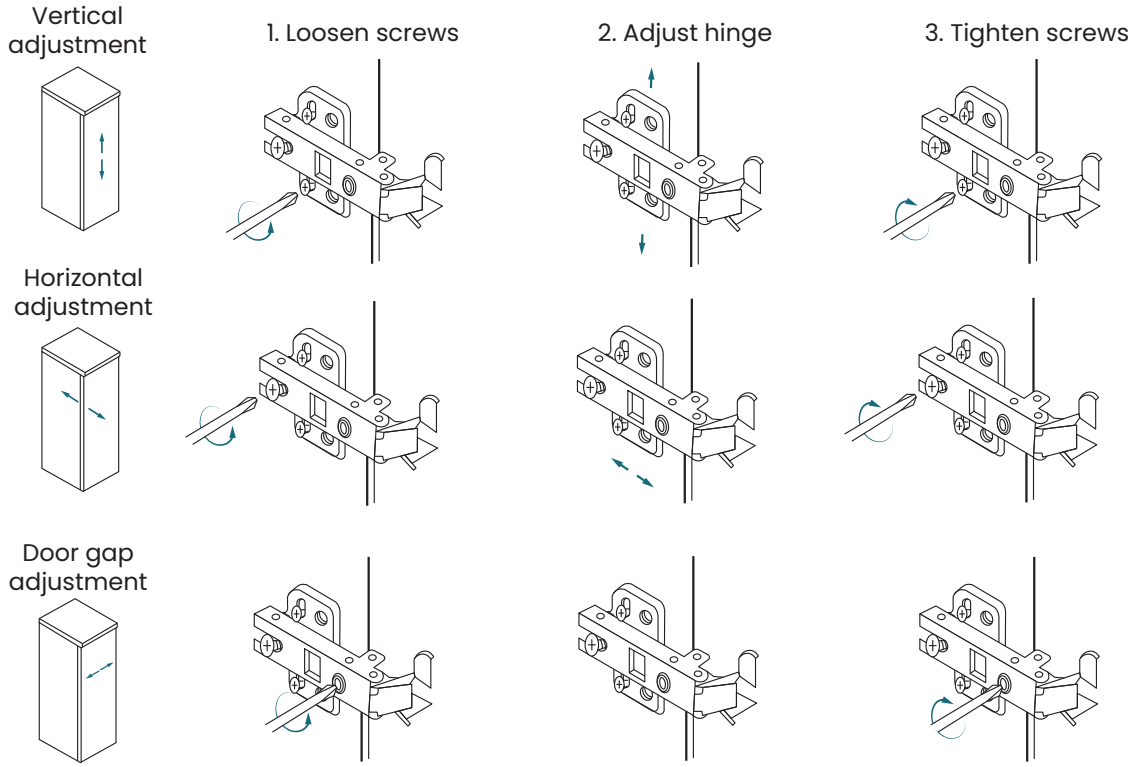

ONE YEAR LIMITED WARRANTY

Swiss Madison® products are made with quality materials and excellent craftsmanship to provide our customers with beautiful, durable, long-lasting products. Should there be any defects in materials or craftsmanship under regular use that are discovered within the first year of installation, Swiss Madison® will provide replacement parts at no charge, or at its discretion, replace any product or part of the product that is deemed defective, under normal installation, use, service or maintenance. This warranty applies only to the original purchaser. Proof of purchase will be required in the instance of a claim.

Swiss Madison® recommends all installations of Swiss Madison® products to be conducted by a licensed, professional plumber or contractor. Swiss Madison® will not be held responsible for any damage or product failure due to improper installation, misuse, or failure to utilize a licensed professional for installation. Swiss Madison® is not responsible for any installation or removal costs.

THIS ONE YEAR LIMITED WARRANTY WILL BE VOIDED IF:

- The installation recommendations were not followed by the installer
- The product has been moved from its initial place of installation
- The product has in any way been modified from its packaged state
- The product has been subjected to improper maintenance, abuse, misuse, excessive use of chemicals, accidents, or other damages, etc.

Swiss Madison® makes no implication that its products comply with any local building or plumbing codes. It is the consumer's responsibility and obligation to determine local code compliance prior to and during installation. This warranty extends only to the original purchaser and first consumer.

Swiss Madison® is not responsible for any special, incidental or consequential damages associated with the installation, replacement, return or use of the original purchaser's product. This includes, but is not limited to: freight costs, labor, travel time, lost profit, home damages and other contingent liabilities and costs (including, without limitation, costs associated with 'professionals' or 'experts', investigations, audits, analyses, attorneys and any other professional/hired services).

The Swiss Madison® warranty is a comprehensive and explicit limit of liability. All items not disclosed within the warranty are not addressable within the responsibility of Swiss Madison®. Certain states have variances regarding implied warranties; in those situations, we remain fully compliant.

QUESTIONS OR CONCERNS?

Please contact us directly at 1-434-MADISON (623-4766)

WARNING:
Contents of your order may contain sharp and possibly other harmful pieces and may cause hazard to children and adults. Swiss Madison® is not responsible in any way for personal damages.