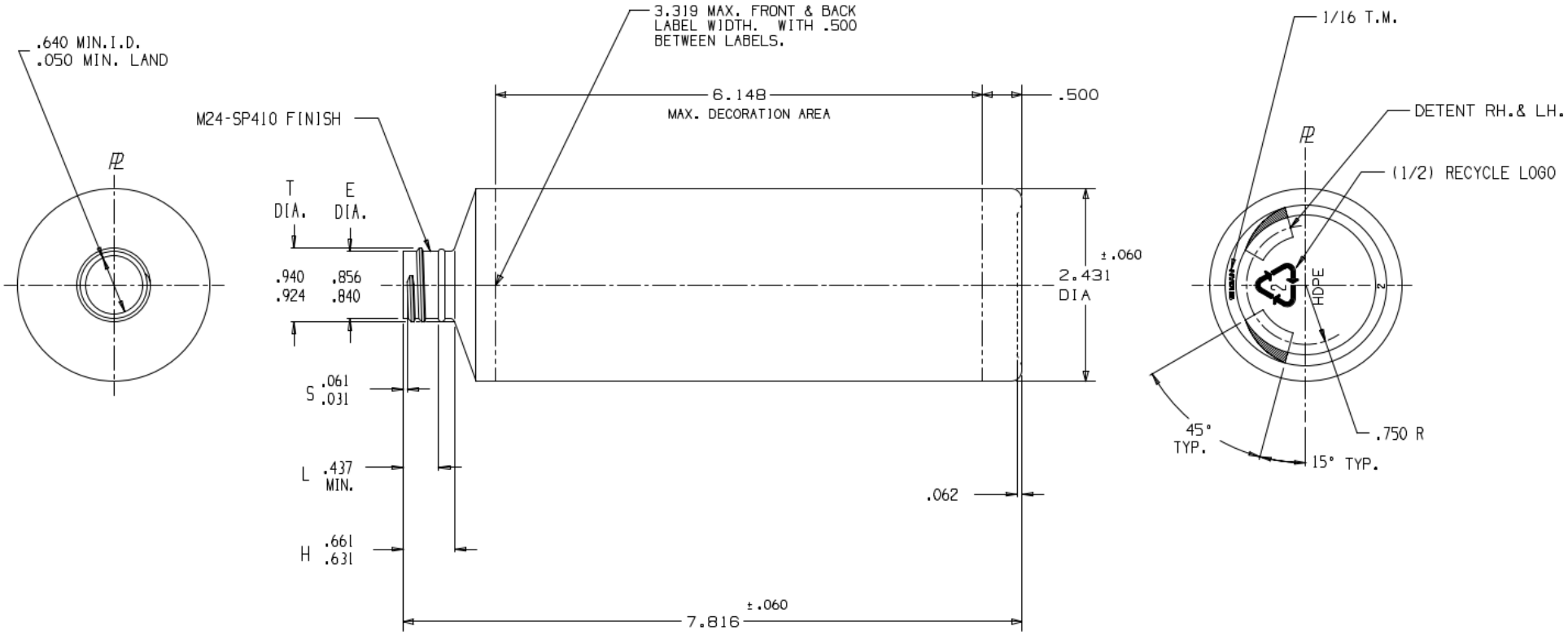

NOTES :

1) OVERFLOW CAPACITY : 17.22 ± .37 FL.OZ. (509.4 ± 11.0 CC'S.)

2) WEIGHT : 30.0 ± 1.5 GRAMS

DISCLAIMER

THIS INFORMATION IS PROVIDED AS A GENERAL GUIDE, INCLUDING DIMENSIONS. IT IS THE CUSTOMER'S RESPONSIBILITIES TO SELECT THE PROPER CONTAINER FOR PRODUCT AND APPLICATION COMPATIBILITY.

DISTRIBUTED BY: Pipeline Packaging

REF NO.: DWG30671

DESCRIPTION: 16 oz HDPE Cylinder Styleline, 24-SP410, 30 Gram