Product Description

Item	Part Description
A	**"F Style" Oblong Can** **Lining Options:** Epoxy (Grey) Epoxy Phenolic (Gold) **Exterior Colors:** Tin **Lithography:** Available **UN Certifications:** Contact Sales Representatives
B	**Soldered Handle**
	Exterior Color: Steel
C	**1 3/4" Delta Nozzle**
D	**32 mm REL (Plastic) - UN**
E	**1 1/4" Alpha Nozzle - UN**
F	**42 mm REL (Plastic) - UN**
G	**2-7/8" Nozzle**
H	**1 1/8" Beta Nozzle - UN**
I	**57 mm DIN (Plastic)**
J	**.953 Stull Nozzle (Plastic)**

Shipping Data

Item	Capacity	Can Size	Shipping Qty (Per Pallet)
A	Gallon	6.64 x 4.15 x 10.32	320/400/720

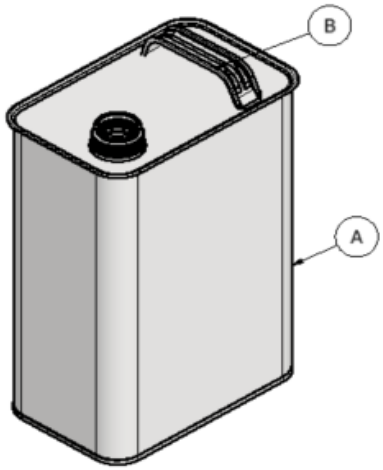

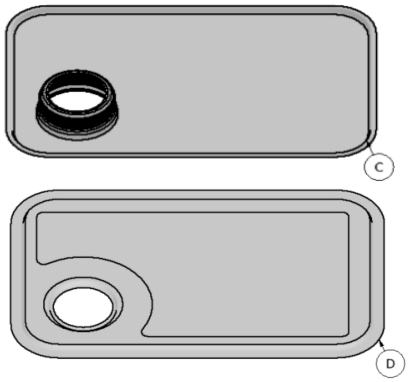

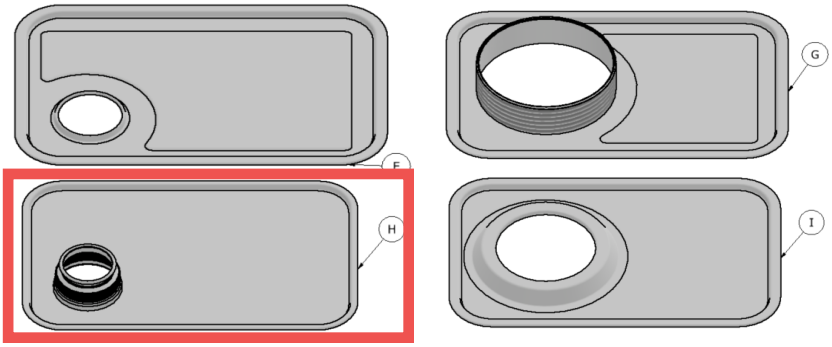

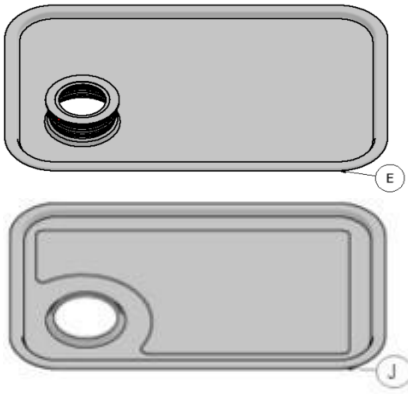

DISCLAIMER

THIS INFORMATION IS PROVIDED AS A GENERAL GUIDE, INCLUDING DIMENSIONS. IT IS THE CUSTOMER'S RESPONSIBILITIES TO SELECT THE PROPER CONTAINER FOR PRODUCT AND APPLICATION COMPATIBILITY.

DISTRIBUTED BY: Pipeline Packaging

REF NO.: DWG31058

DESCRIPTION: 1 Gallon Steel F-Style, 1.25 in Beta Nozzle, 610x907