IMPORTANT:
Installation and NG-to-LPG gas conversion must only be performed by a licensed gas technician.

avanti®	The Legacy Companies, LLC Weston, FL 33331 U.S.A. MADE IN CHINA	
GAS RANGE RESIDENTIAL USE ONLY **INSTALLATION INSTRUCTIONS** **IMPORTANT** **PLEASE READ AND FOLLOW**	**Model Numbers:** GR2011CW GRO20P0W GR2012CB GRO24P0W GR2013CSS GR2414CW DGR20P3S GR2415CB DGR24P3S GR2416CSS	Intertek 4009900 Conforms to ANSI STD Z21.1-2018 Certified to CSA Std. 1.1-2018 Household Gas Appliances

IMPORTANT: Installation and NG to LPG gas conversion must only be performed by a licensed technician or qualified gas installer.

IMPORTANT - PLEASE READ AND FOLLOW

- Before beginning, please read these instructions completely and carefully.
- Do not remove permanently affixed labels, warnings, or plates from the product. This may void the warranty.
- Please observe all local and national codes and ordinances.
- Please ensure that this product is properly grounded.
- **The installer should leave these instructions with the consumer who should retain for local inspector's use and for future reference.**
- The electrical plug should always be accessible

Installation must conform with local codes or in the absence of codes, the National Fuel Gas Code ANSI Z223.1 / NFPA 54 - Latest Edition. Electrical installation must be in accordance with the National Electrical Code, ANSI / NFPA 70 - latest edition and/or local codes.

INSTALLATION IN MANUFACTURED (MOBILE) HOME: The installation must conform with the Manufactured Home Construction and Safety Standard, Title 24 CFR, Part 3280 [formerly the Federal Standard for Mobile Home Construction and Safety, Title 24, HUD (Part 280)] or, when such standard is not applicable, the Standard for Manufactured Home Installations, ANSI / NCSBCS A225.1, or with local codes where applicable.

INSTALLATION IN RECREATIONAL PARK TRAILERS: The installation must conform with state or other codes or, in the absence of such codes, with the Standard for Recreational Park Trailers, ANSI A119.5.

Installation of any gas-fired equipment should be made by a licensed plumber. A manual gas shut-off valve must be installed in the gas supply line ahead of the appliance in the gas stream for safety and ease of service.

If an external electrical source is utilized, the appliance, when installed, must be electrically grounded in accordance with local codes or, in the absence of local codes, with the national Electrical Code, ANSI / NFPA 70.

This range is supplied with a protective film on steel and aluminum parts. This film must be removed before installing / using the appliance.

FOR INSTALLER ONLY

THIS RANGE IS FOR RESIDENTIAL USE ONLY

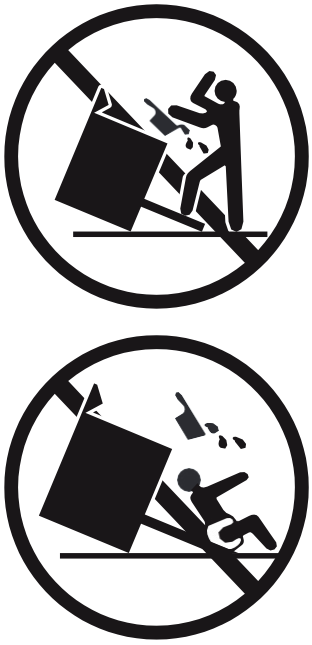

WARNING !

To reduce the risk of tipping the appliance, the appliance must be secured by properly installed anti-tip device packed with the appliance.

- **ALL RANGES CAN TIP**
- **INJURY TO PERSONS COULD RESULT**
- **INSTALL ANTI-TIP DEVICE PACKED WITH RANGE**
- **SEE INSTALLATION INSTRUCTIONS**

WARNING !

If the information in this manual is not followed exactly, a fire or explosion may result causing property damage, personal injury, or death.

– **Do not store or use gasoline or other flammable vapors and liquids in the vicinity of this or any other appliance.**

– **NEVER use this appliance as a space heater to heat or warm the room. Doing so may result in carbon monoxide poisoning and overheating of the appliance.**

– **WHAT TO DO IF YOU SMELL GAS:**

- **Do not try to light any appliance.**
- **Do not touch any electrical switch.**
- **Do not use any phone in your building.**
- **Immediately call your gas supplier from a neighbor's phone. Follow the gas supplier's instructions.**
- **If you cannot reach your gas supplier, call the fire department.**

– **Installation and service must be performed by a qualified installer, service agency, or the gas supplier.**

RATING LABELS

Models: GR2011CW / GR2012CB / GR2013CSS
DGR20P3S

avanti.

AVANTI PROUCTS
WESTON, FL USA 33331
MADE IN CHINA

Intertek
4009900

Conforms to ANSI STD Z21.1-2018 Certified to CSA STD 1.1-2018 Household Cooking Gas Appliances

Burner Input Rating/L'Estimation d'Entrée: BTU/Hr

	Natural Gas De Gas Natural	LP/propane Gas LP/Le Gaz Divers
Front Right /Avant Droit	2500 BTU	2500 BTU
Front Left/Avant Gauche	8000 BTU	8000 BTU
Rear Right/Arrière Droit	4300 BTU	4300 BTU
Rear Left/Arrière Gauche	4300 BTU	4300 BTU
Total Thermal Load Le Four Thermique Total	19100 BTU	19100 BTU
Oven/Grillent	6500 BTU	6500 BTU
Broil/Brúleur	6500 BTU	6500 BTU

MANIFOLD PRESSURE : NATURAL GAS 4" W.C.P
LP/PROPANE GAS 10" W.C.P

ELECTRICAL RATING:0.1 AMP MAX - 120 Vac - 60 Hz

Models: GR2414CW / GR2415CB / GR2416CSS
DGR24P3S

avanti.

AVANTI PROUCTS
WESTON, FL USA 33331
MADE IN CHINA

Intertek
4009900

Conforms to ANSI STD Z21.1-2018 Certified to CSA STD 1.1-2018 Household Cooking Gas Appliances

Burner Input Rating/L'Estimation d'Entrée: BTU/Hr

	Natural Gas De Gas Natural	LP/propane Gas LP/Le Gaz Divers
Front Right /Avant Droit	2500 BTU	2500 BTU
Front Left/Avant Gauche	8000 BTU	8000 BTU
Rear Right/Arrière Droit	4300 BTU	4300 BTU
Rear Left/Arrière Gauche	4300 BTU	4300 BTU
Total Thermal Load Le Four Thermique Total	19100 BTU	19100 BTU
Oven/Grillent	7300 BTU	7300 BTU
Broil/Brúleur	6700 BTU	6700 BTU

MANIFOLD PRESSURE : NATURAL GAS 4" W.C.P
LP/PROPANE GAS 10" W.C.P

ELECTRICAL RATING:0.1 AMP MAX - 120 Vac - 60 Hz

Models: GRO20P0W / GRO24P0W

avanti.

AVANTI PROUCTS
WESTON, FL USA 33331
MADE IN CHINA

Intertek
4009900

Conforms to ANSI STD Z21.1-2018 Certified to CSA STD 1.1-2018 Household Cooking Gas Appliances

Burner Input Rating/L'Estimation d'Entrée: BTU/Hr

	Natural Gas De Gas Natural	LP/propane Gas LP/Le Gaz Divers
Front Right /Avant Droit	9000 BTU	9000 BTU
Front Left/Avant Gauche	9000 BTU	9000 BTU
Rear Right/Arrière Droit	9000 BTU	9000 BTU
Rear Left/Arrière Gauche	9000 BTU	9000 BTU
Total Thermal Load Le Four Thermique Total	36000 BTU	36000 BTU
Oven/Grillent Broil/Brúleur	10000 BTU	10000 BTU

MANIFOLD PRESSURE : NATURAL GAS 4" W.C.P
LP/PROPANE GAS 10" W.C.P

ELECTRICAL RATING:0.1 AMP MAX - 120 Vac - 60 Hz

⚠ WARNING!!

The Governor of California is required to publish a list of substances known to the state of California to cause cancer or reproductive harm and requires businesses to warn customers of potential exposures to such substances.

WARNING!: Gas appliances contain or produce substances which can cause death or serious illness and which are known to the State of California to cause cancer, birth defects or other reproductive harm. To reduce the risk from substances in fuel or from fuel combustion, make sure this appliance is installed, operated, and maintained according to the manufacturer's instructions.

This appliance is designed and manufactured solely for the cooking of domestic (household) food and is not suitable for any none domestic application and therefore should not be used in a commercial environment.

The appliance warranty will be void if the appliance is used within a none domestic environment i.e. a semi commercial, commercial or communal environments.

WARNING!

THIS APPLIANCE MUST BE INSTALLED BY A QUALIFIED INSTALLER.
Installation must conform with all local codes.
Improper installation, adjustment, alteration, services, or maintenance can cause injury or property damage. Consult a qualified installer, service agent or the gas supplier.

WARNING!! **IMPORTANT: The use of suitable protective clothing/gloves is recommended when handling, installing of this appliance.**

TOOLS NEEDED FOR INSTALLATION (NOT SUPPLIED WITH THE APPLIANCE)

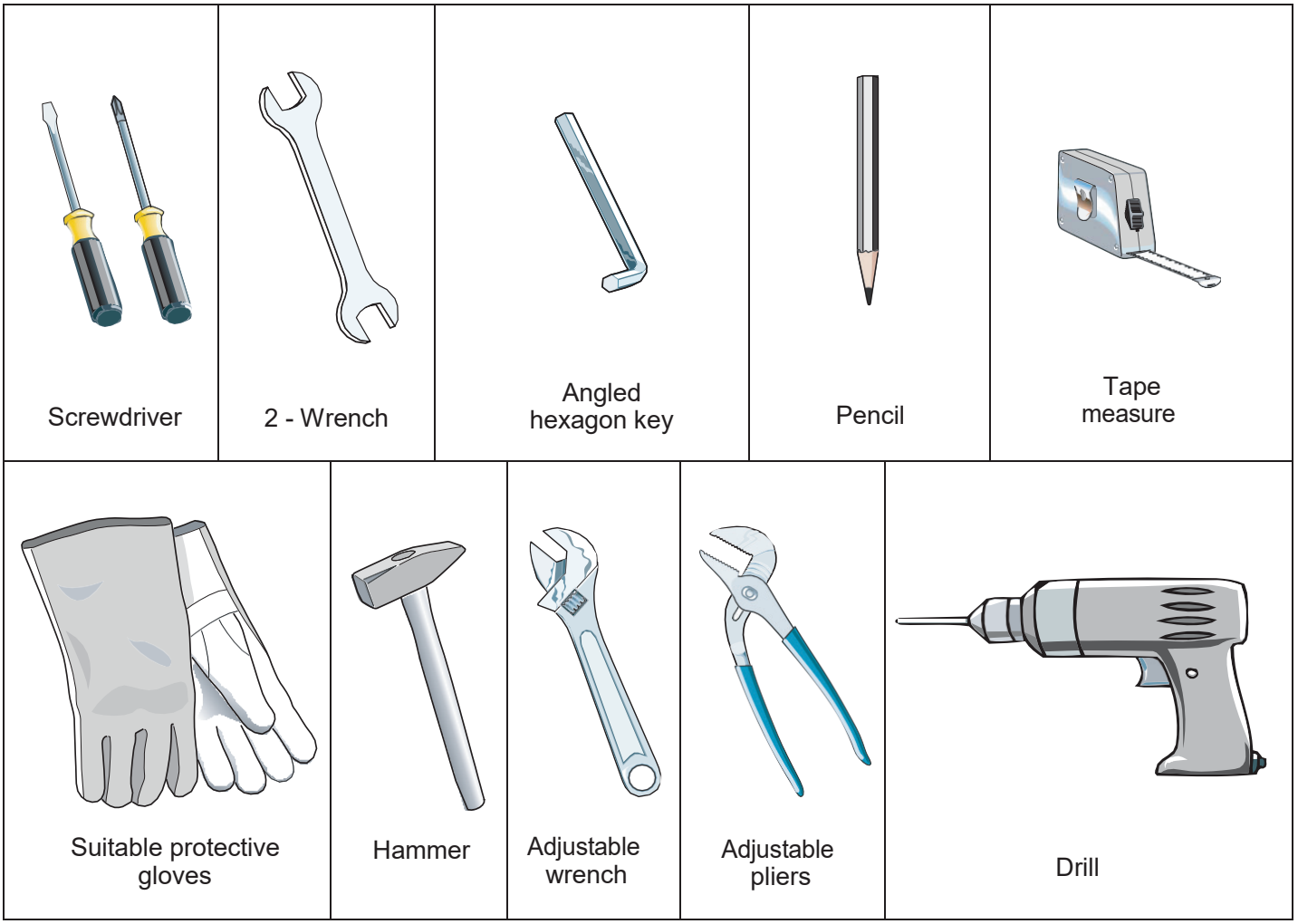

Fig. 1

GENERAL INFORMATION

1. Installation must conform with local codes or, in the absence of local codes, with the **National Fuel Gas Code**, ANSI Z223.1 / NFPA 54 - Latest Edition.

2. Installation in manufactured (mobile) home: installation must conform with the **Manufactured Home Construction and Safety Standard, Title 24 CFR, Part 3280 [formerly the Federal Standard for Mobile Home Construction and Safety, Title 24, HUD (Part 280)]** or, when such standard is not applicable, the Standard for **Manufactured Home Installations, ANSI / NCSBCS A225.1**, or with local codes where applicable.

3. Installation in Recreational Park Trailers: installation must conform with state or other codes or, in the absence of such codes, with the Standard for **Recreational Park Trailers, ANSI A119.5.**

4. To eliminate risk of burns or fire by reaching over heated surface units, cabinet storage located above the surface units should be avoided.

5. Air curtain or other overhead range hoods, which operate by blowing a downward air flow on to a range, shall not be used in conjunction with gas ranges other than when the hood and range have been designed, tested and listed by an independent test laboratory for use in combination.

6. **WARNING!!**
   This appliance shall not be used for space heating. This information is based on safety considerations.

7. All openings in the wall behind the appliance and in the floor under the appliance shall be sealed.

8. Keep appliance area clear and free from combustible materials, gasoline, and other flammable vapors.

9. Do not obstruct the flow of combustion and ventilation air.

10. Disconnect the electrical supply to the appliance before servicing.

11. When removing appliance for cleaning and/or service;
    A. Shut off gas at main supply.
    B. Disconnect AC power supply.
    C. Disconnect gas line to the inlet pipe.
    D. Carefully remove the range by pulling outward.
    CAUTION: Range is heavy; use care in handling.

12. **Electrical Requirement**
    Electrical installation should comply with national and local codes.

13. **Air Supply and Ventilation**
    The installer must refer to local/national codes.

14. **Gas Manifold Pressure**
    Natural gas - 4.0” W.C.P.
    LP/Propane - 10.0” W.C.P.

15. The misuse of oven door (e.g. stepping, sitting, or leaning on them) can result in potential hazards and/or injuries.

16. When installing or removing the range for service, a rolling lift jack should be used. Do not push against any of the edges of the range in an attempt to slide it into or out of the installation. Pushing or pulling a range (rather than using a lift jack) also increases the possibility of bending the leg spindles or the internal coupling connectors.

WARNING!!

ELECTRICAL GROUNDING INSTRUCTIONS

The range must be electrically grounded in accordance with local codes or, in the absence of local codes, with the National Electrical Code, ANSI / NFPA No. 70-latest edition.

Installation should be made by an experienced and Licensed electrician.

FOR PERSONAL SAFETY, THIS APPLIANCE MUST BE PROPERLY GROUNDED.

If an external electrical source is utilized, the installation must be electrically grounded in accordance with local codes or, in the absence of local codes, with the national Electrical Code, ANSI/ NFPA 70.

This appliance is equipped with a three-prong grounding plug for your protection against shock hazard and should be plugged directly into a properly grounded socket.

Do not under any circumstances cut or remove the third (ground) prong from the power plug.

REPLACEMENT PARTS

Only authorized replacement parts may be used in performing service on the range. Replacement parts are available from factory authorized parts distributors. Contact the nearest parts distributor in your area.

PROXIMITY TO SIDE CABINETS

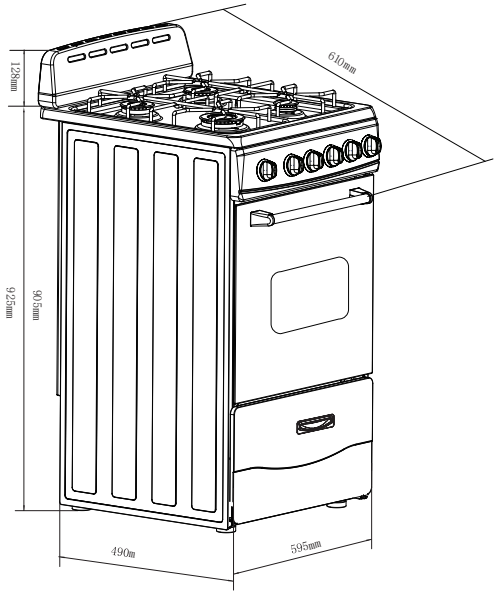

1. This range may be installed adjacent to existing 36” (914 mm) high base cabinets ensuring a 20” (508 mm) or 24” (610 mm) opening width between the cabinets

Range dimensions:

20” Wide Models		24” Wide Models	
Width:	19” 9/16 (497 mm)	Width:	23 ½ (597 mm)
Depth:	23” 3/4 (603.4 mm)	Depth:	23” 3/4 (603.4 mm)
Height:	Without the backsplash		
MIN:	35” 7/16 (900 mm)		
MAX:	36” 7/32 (920 mm)		
Backsplash Height	GR2011CW / GR2012CB / GR2013CSS GR2414CW / GR2415CB / GR2416CSS GRO20P0W / GRO24P0W		5 ¼” 134 mm
	DGR20P3S / DGR24P3S		2” 50 mm

Gas line opening:

Wall - 5” 57/64 (150 mm) from the floor; from the center to the rear left side of the range.

Grounded outlet:

The electric cord with 3-prong ground plug has a length of 72” (1830 mm). Grounded outlet should be located 5” 57/64 (150 mm) from the floor and from the center to the rear right side of the range.

2. The range CANNOT be installed adjacent to sidewalls, tall cabinets, tall appliances, or other side vertical surfaces above 36” (914 mm) high.

   There must be a minimum of 3” (76 mm) side clearance from the range to such combustible surfaces TO THE LEFT above the 36” (914 mm) high countertop; or there must be a minimum of 11” 13/16 (300 mm) side clearance from the range to such combustible surfaces TO THE RIGHT above the 36” (914 mm) high countertop.

IMPORTANT:

One side (left or right) above the 36” (914 mm) high countertop must always be kept clear. Ensure a 20” (508 mm) or 24” (610 mm) opening width between the cabinets.

3. The range CANNOT be installed adjacent to sidewalls, tall cabinets, tall appliances, or other side vertical surfaces above 36” (914 mm) high.

   There must be a minimum of 3” (76 mm) side clearance from the range to such combustible surfaces TO THE LEFT above the 36” (914 mm) high countertop; or there must be a minimum of 11” 13/16 (300 mm) side clearance from the range to such combustible surfaces TO THE RIGHT above the 36” (914 mm) high countertop.

IMPORTANT: One side (left or right) above the 36” (914 mm) high

4. The maximum upper cabinet depth recommended is 13” (330 mm). Wall cabinet above the range must be a minimum of 30” (762 mm) above the countertop for a width of minimum 19” (482.6 mm): it has to be centered with the range. Side wall cabinets above the range must be a minimum of 18” (457 mm) above the countertop.

INSTALLATION

PROXIMITY TO SIDE CABINETS

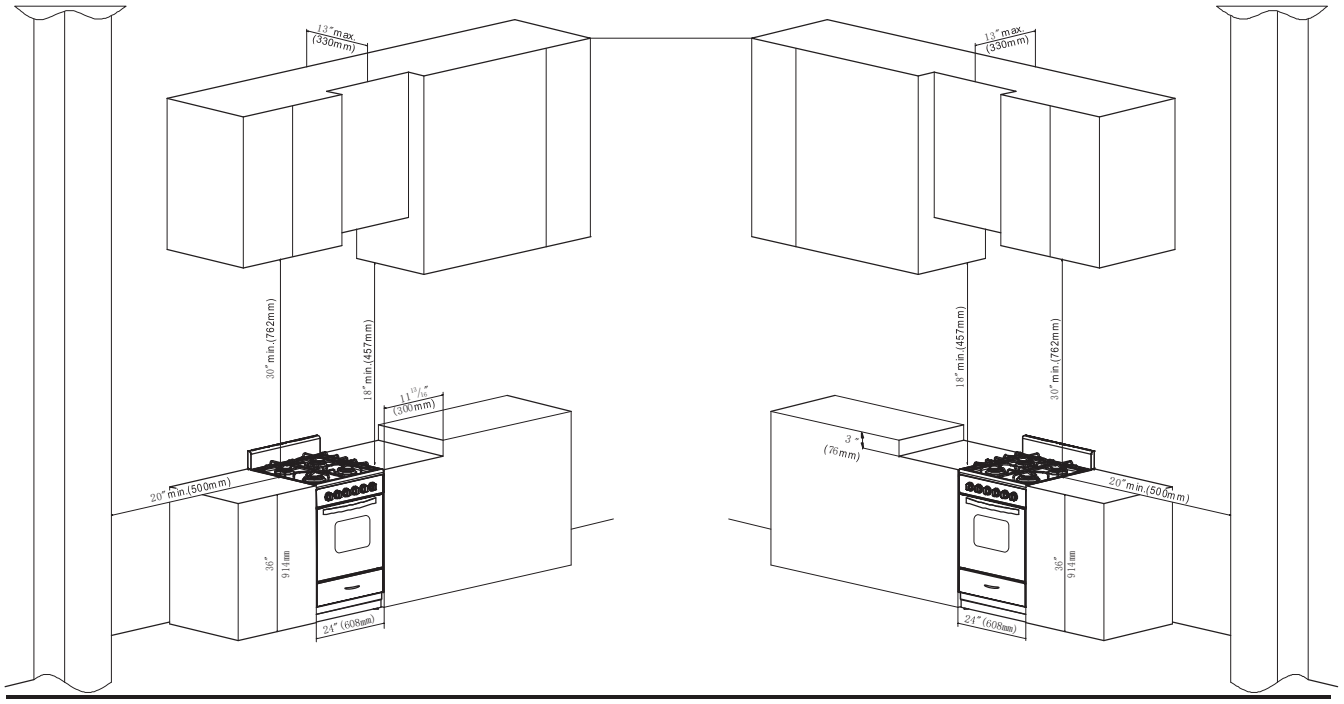

GAS AND ELECTRIC CONNECTION

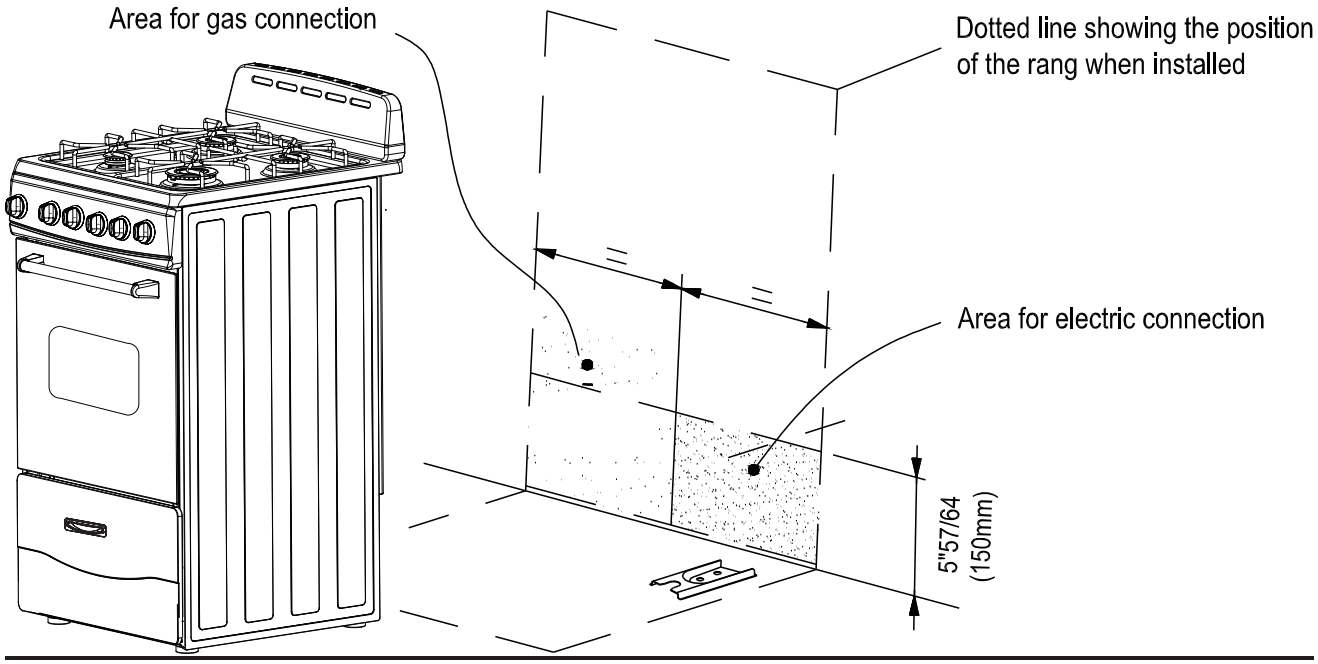

INSTALLATION

HOW TO INSTALL THE BACKSPLASH

A

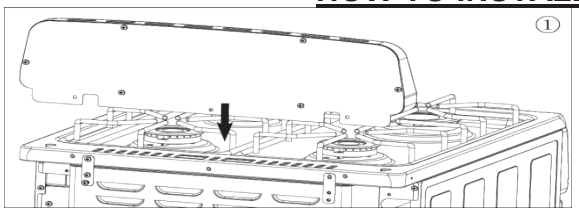

Align the backsplash to rear part of the cooktop.

As shown in the diagram

B

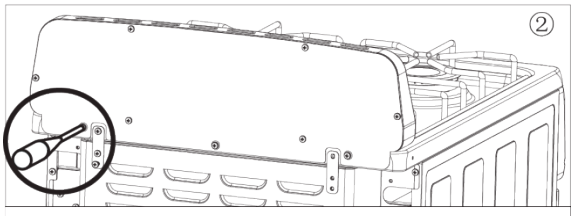

Secure the backsplash to the cooktop from the back using the Philips head screws provided.

As shown in the diagram

C

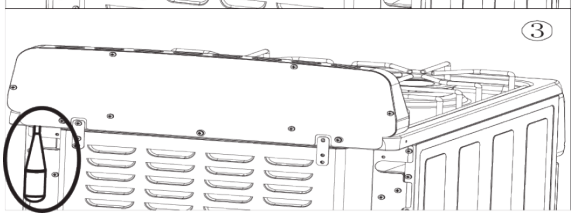

Secure the backsplash from the bottom using the Philips head screws provided.

As shown in the diagram

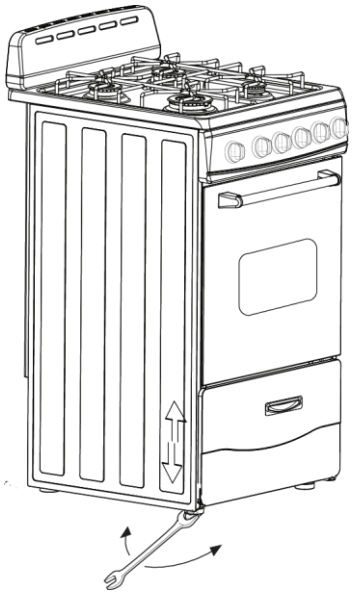

HOW TO LEVEL THE RANGE

The range is equipped with 4 LEVELLING LEGS and may be leveled by screwing or un-screwing the feet with a spanner tool.

Note:
Models GRO20P0W / GRO24P0W:
There are two leveling legs at the rear of the unit.
The front feet cannot be adjusted.

ANTI-TIP STABILITY DEVICE INSTALLATION INSTRUCTIONS

YOU MUST USE THE ANTI-TIP / STABILITY BRACKET TO PREVENT UNIT FROM TIPPING.

1. The anti-tip bracket has to be attached as shown on figure below (only rear right side), it has to be fixed on the floor and on the rear wall by four (4) suitable screws (not supplied).
2. After fixing the anti-tip bracket, slide range into place. Be sure the rear right foot slides under the anti-tip bracket attached.

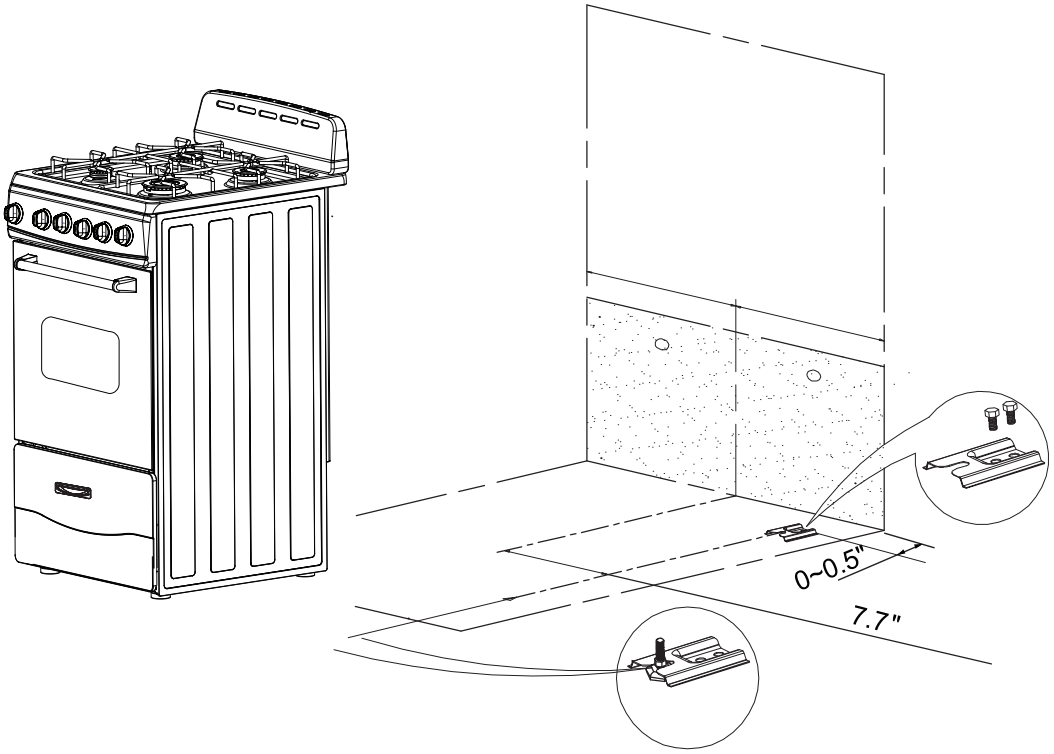

GAS CONNECTION

All gas connections must be made according to national and local codes. This gas supply (service) line must be the same size or greater than the inlet line of the appliance. Sealant on all pipe joints must be resistant to the action of LP/Propane gas.

The range is equipped for the use with NATURAL gas. It is design-certified by CSA International for NATURAL and L.P. gases with appropriate conversion.

The model/serial rating plate, located inside the drawer, has information on the type of gas that can be used. If this information does not agree with the type of gas available, check with the local gas supplier. See page from 13 to 16 for L.P. gas conversion instructions.

1. Manual Shut-off Valve:

The supply line shall be equipped with an approved shutoff valve. This valve should be located in the same room as the range and should be in a location that allows ease of opening and closing (in a position where it can be reached quickly in the event of an emergency).

Do not block access to the shutoff valve. The valve is for turning on or shutting off gas to the appliance.

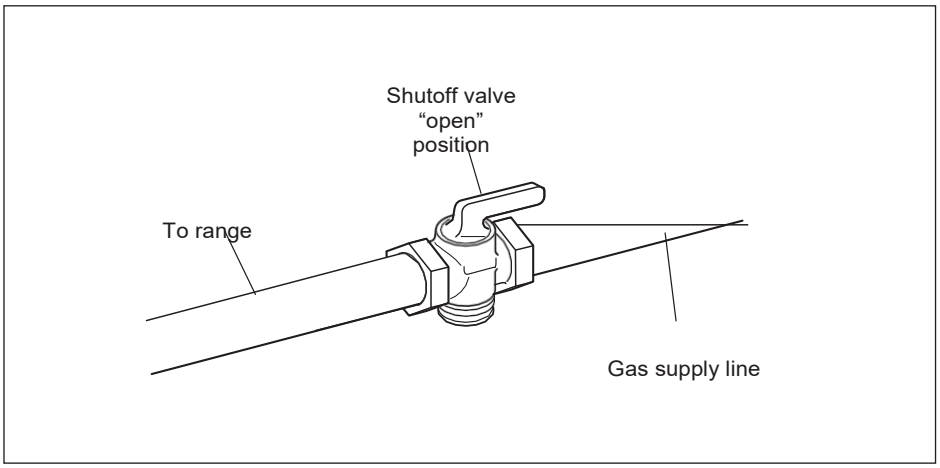

WARNING

Explosion Hazard

Use a new CSA or UL approved gas supply line.

Securely tighten all gas connections.

If connected to LPG, have a qualified / licensed person make sure gas pressure does not exceed 14” water column.

Examples of a qualified / licensed person include licensed heating personnel, authorized gas company personnel, and authorized service personnel.

Failure to do so can result in death, explosion, or fire.

GAS CONNECTION

PRESSURE REGULATOR INSTALLATION

Note:

THE REGULATOR IS PRE-INSTALLED BY THE FACTORY FOR YOUR CONVENIENCE.

THE FOLLOWING INSTRUCTIONS ARE FOR INFORMATION PURPOSES ONLY OR IN THE INSTANCE A PART MUST BE REPLACED.

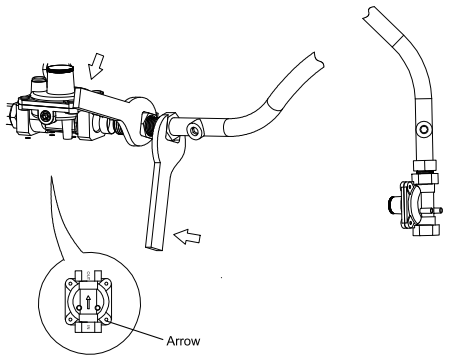

WARNING
Check the right positioning of the gas regulator. The arrow on the back of the gas regulator must be oriented toward the connector.

2. Pressure Regulator:

a) All heavy duty, commercial type cooking equipment must have a pressure regulator on the incoming service line for safe and efficient operation, since service pressure may fluctuate with local demand.
Before installing the regulator mount the 1/2” NPT (conical) male connector to the regulator
The regulator supplied with this range must be installed before any gas connections are made.
Use supplied pressure regulator only.

b) Any conversion required must be performed by your dealer or a qualified licensed plumber or gas service company.
Please provide the service person with this manual before work is started on the range.
(Gas conversions are the responsibility of the dealer or end user.)

c) This range can be used with NATURAL or LP/PROPANE gas.
It is shipped from the factory adjusted for use with NATURAL gas.

d) Manifold pressure should be checked with a manometer; NATURAL gas requires 4.0” W.C.P. and LP/PROPANE requires 10.0” W.C.P.
Incoming line pressure upstream from the regulator must be 1” W.C.P. higher than the manifold pressure in order to check the regulator.
The regulator used on this range can withstand a maximum input pressure of 1/2 PSI (14.0” W.C.P). If the line pressure is in excess of that amount, a step-down regulator will be required.

e) The appliance, its individual shut-off valve, and pressure regulator must be disconnected from the gas supply piping system during any pressure testing of that system at pressures in excess of 1/2 PSI (3.5 kPa).

f) The appliance must be isolated from the gas supply piping system by closing its individual manual shut-off valve during any pressure testing of the gas supply piping system at test pressure equal to or less than 1/2 PSI (3.5 kPa).

3. Flexible Connections:

If local codes permit, CSA design-certified, flexible metal appliance connector is recommended for connecting this range to the gas supply line. Do Not kink or damage the flexible connector when moving the range. The pressure regulator has 1/2” NPT female pipe threads. You will need to determine the fittings required, depending on the size of your gas supply line, flexible metal connector and shutoff valve.

4. Rigid Pipe Connections:

If rigid pipe is used as a gas supply line, a combination of pipe fittings must be used to obtain an in-line connection to the range.
All strains must be removed from the supply and fuel lines so range will be level and in line.

- Use joint compounds and gaskets that are resistant to action of natural or propane gas on all male pipe threads.
- Do not over tighten gas fitting when attaching to pressure regulator. Over tightening may crack regulator.

5. Leak Testing:

IMPORTANT: Leak testing of the appliance shall be conducted as follows:

- After final gas connection is made, turn on manual gas valve and test all connections in gas supply piping and appliance for gas leaks with a soapy water solution. During this test all appliance gas valves have to be closed.
- In order to avoid property damage or serious personal injury, never use a lighted match. If a leak is present, tighten joint or unscrew, apply more joint compound, tighten again and retest connection for leak.

GAS CONNECTION

ATTENTION:
The regulator is pre-installed by the factory for your convenience.
The following instructions are for information purposes only or in the instance a part must be replaced.

ALL REPAIR / PART REPLACEMENTS AND CONNECTIONS MUST BE DONE BY AN EXPERIENCED LICENSED PROFESSIONAL.

WARNING
Check the right positioning of the gas regulator. The arrow on the back of the gas regulator must be oriented toward the connector.

Applies to models: GR2011CW / GR2012CB / GR2013CSS GR2414CW / GR2415CB / GR2416CSS	Applies to models: GR020P0W / GRO24P0W DGR20P3S / DGR24P3S
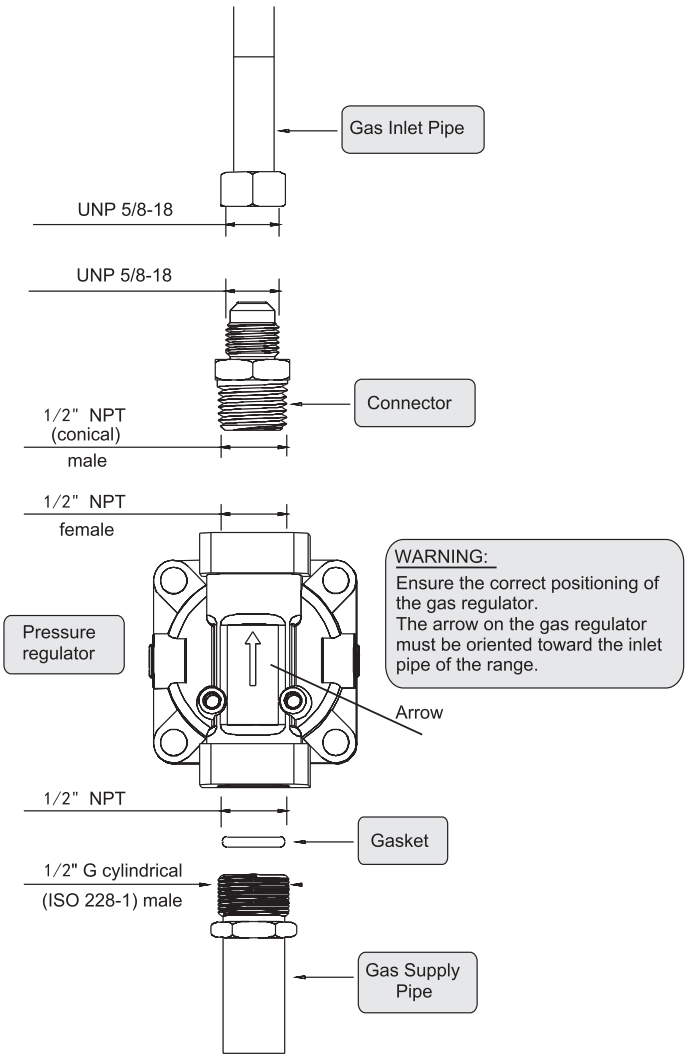	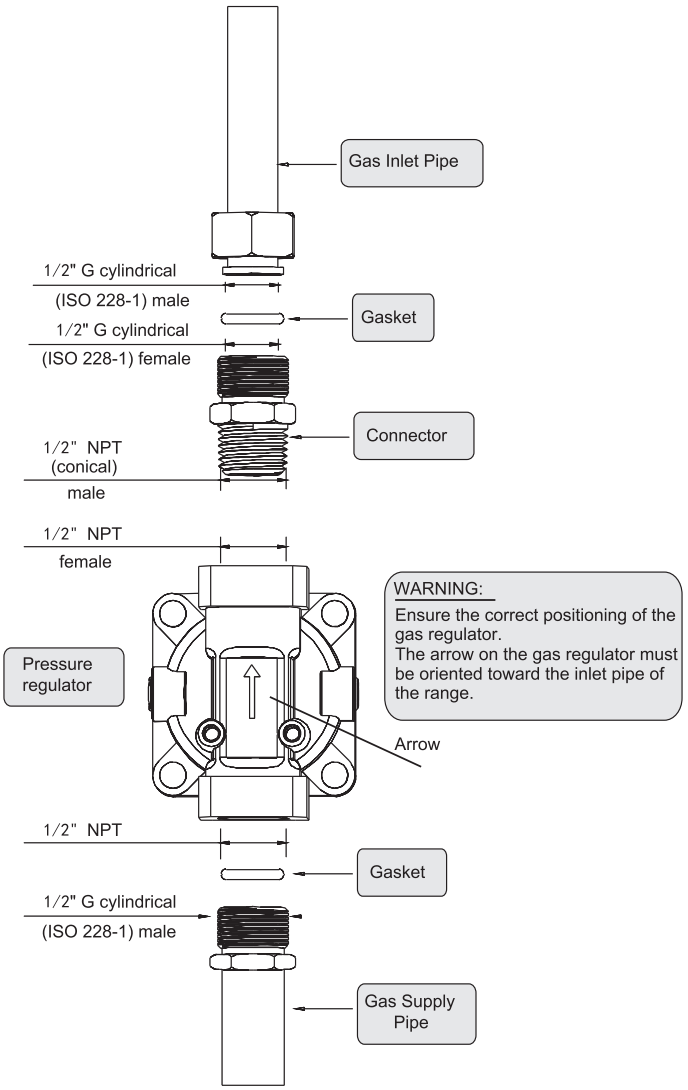

GAS CONVERSION

CONVERSION FROM NATURAL GAS (NG) TO PROPANE (LPG)

Every range is provided with a set of injectors for the various types of gas.

Select the injectors to be replaced according to the “INJECTORS TABLE”.

The nozzle diameters, expressed in hundredths of a millimeter, are marked on the body of each injector.

Any conversion required must be performed by your dealer or a qualified licensed plumber or gas service company.
Please provide the service person with this manual before work is started on the range.

(Gas conversions are the responsibility of the dealer or end user.)

SETTING THE PRESSURE REGULATOR

STEP 1 STEP 2 STEP 3

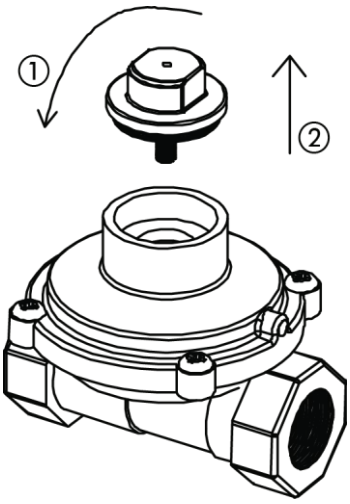

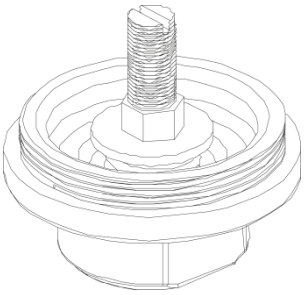

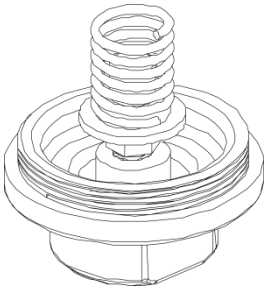

Step 1: Open the regulator cover by turning the cover in a counter-clockwise direction.

Step 2: See the pressure screw installed in the cover. This is the Natural Gas position.

Step 3: Carefully unscrew the pressure screw and remove it along with the spring below.

Invert the position of the pressure screw and spring

Reinstall the pressure screw as showing in the image above.

Final: Re-Install the regulator cover by screwing into place in a clockwise direction.

Ensure the cover securely closed before installing the regulator and connecting to the gas supply.

DO NOT OVERTIGHTEN

GAS CONVERSION

IMPORTANT: Injector replacement must only be performed by a licensed technician or qualified gas installer. Use the supplied injector wrench to remove and install the injectors. Do not use improper tools, as this may damage the injector holes or affect gas flow.

REPLACING THE INJECTORS

The following process applies to the following models:
GR2011CW / GR2012CB / GR2013CSS GR2414CW / GR2415CB / GR2416CSS DGR20P3S / DGR24P3S

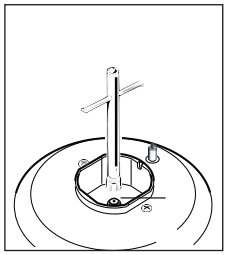

INJECTORS TABLE

	NOMINAL POWER	REDUCED POWER	L P G PROPANE GAS		N G NATURAL GAS	
BURNERS	BTU / hr	BTU / hr	Injector (1/100mm)	By-pass (1/100mm)	Injector (1/100mm)	By-pass (1/100mm)
Auxiliary (AUX)	2500	2500	53	Adjustable	80	53
Semi Rapid	4300	4300	68	Adjustable	100	76
Rapid	8000	8000	90	Adjustable	140	81
Oven Burner	6500 / 7300	6500 / 7300	80 / 82	Adjustable	124 / 140	--
Broil Burner	6500 / 6700	6500 / 6700	80	Adjustable	124 / 130	

To replace the injectors follow these steps:

1) Remove the pan supports and burner covers.
2) Using the supplied injector wrench, remove the existing injector from each burner.
3) Install the replacement injector with the correct size injector for each burner using the supplied injector wrench. Ensure each injector is securely installed, but do not overtighten.

Note: The burners are designed in such a way so as to not require the regulation of the primary air.

The following process applies to the following models: GRO20P0W / GRO24P0W

1) Remove the pan supports.
2) Remove the cooktop (See the user's guide).
3) Remove the screws which secure the top burner.

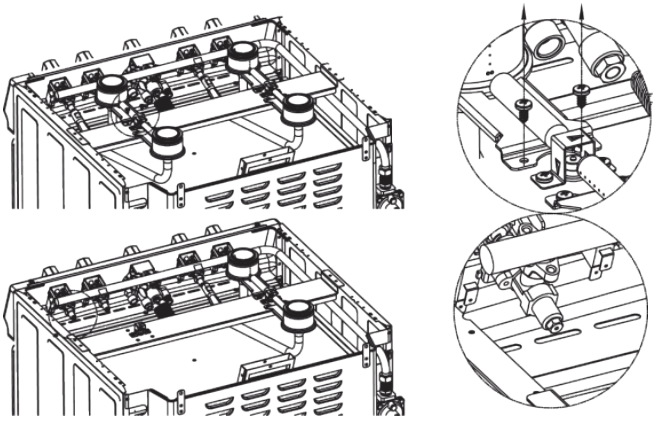

4) Remove the existing Natural Gas (NG) injector and replace with the new Propane (LPG) injector.
5) Re-install the top burners.
6) Check gas leakage, if there is a leak at the connection, use a gas-resistant joint compound to seal the connection points.
7) Re-install the cooktop and pan supports.
8) There are a total of five (5) injectors;
   Four (4) for the cooktop, with a diameter of 0.90mm.
   One (1) for the Oven / Broiler burner, with a diameter of 1.00mm

IMPORTANT:
After conversion to L P G / Propane gas has been carried out, affix inside the drawer, near the data plate, the conversion label supplied and also affix a conversion label to the instruction manual.

NOTICE:
The manufacturer cannot be held responsible for possible inaccuracies due to printing or transcription errors in this booklet. The manufacturer reserves the right to make all modifications to its products deemed necessary for manufacturers or commercial reasons at any moment and without prior notice, without jeopardizing the essential function and safety characteristics of the appliances.

REMOVING THE OVEN DOOR

To facilitate the conversion process for the oven / broiler burners, the door can be removed. Please follow the instructions carefully:

a) Open the door all the way.
b) Lift the left and right hooks on the hinges.
c) Hold the door firmly on each side.
d) Gently close the door and lift upward once the hooks touch the door.
e) Set the door on a soft flat surface.
f) To replace the door, repeat the above steps in reverse order.

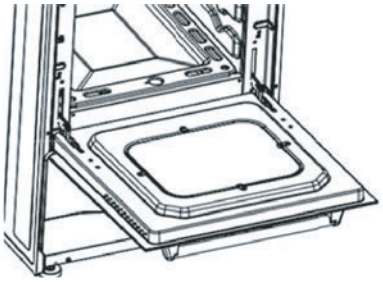

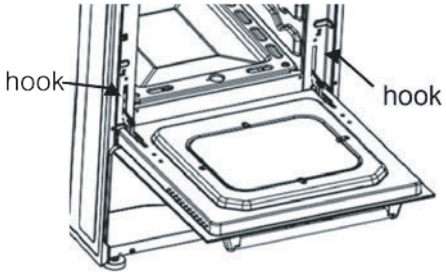

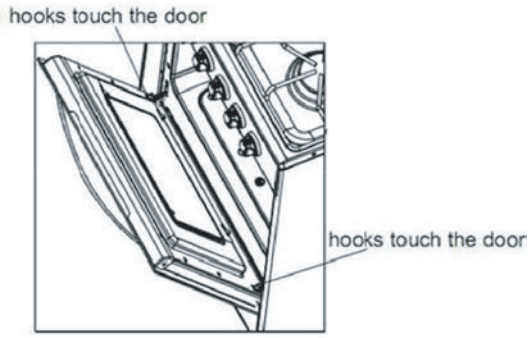

REPLACING THE OVEN / BROILER BURNER INJECTORS

The following process applies to the following models:
GR2011CW / GR2012CB / GR2013CSS GR2414CW / GR2415CB / GR2416CSS DGR20P3S / DGR24P3S

To replace the OVEN burner injector:

a) Lift and remove the lower panel inside the oven.
b) Remove the burner securing screws (total 4) (fig. 22)
c) Withdraw the burner and rest it inside the oven.
Take care as not to damage the wire to the ignition electrode as well as the thermocouple.
d) Using a 7 mm box spanner, unscrew the injector and replace it using the new LPG injector.
e) Replace the burner repeating the above steps in reverse order.

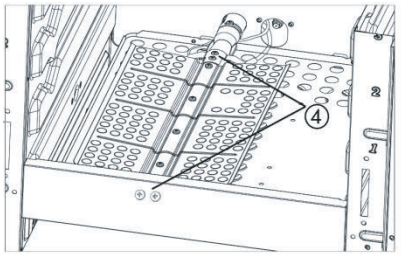

fig. 22

To replace the BROIL burner injector:

a) Remove the burner by unscrewing the front screw (fig. 23)
b) Gently suspend the burner as shown in figure 24.
Take care as not to damage the wire to the ignition electrode as well as the thermocouple.
c) Using a 7 mm box spanner, unscrew the injector (indicated in figure 24) and replace it using the new LPG injector.
d) Replace the burner repeating the above steps in reverse order.

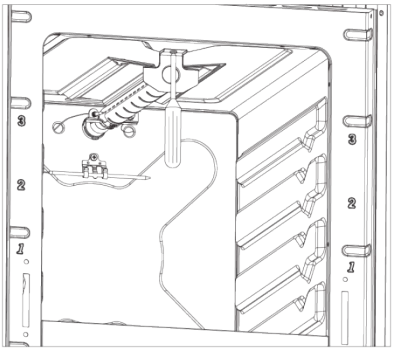

fig. 23

The following process applies to the following models: GRO20P0W / GRO24P0W

To replace the OVEN / BROILER burner injector:

a) Life and remove the lower panel inside the oven.
b) Remove the burner securing screws (total 4) (fig. 21)
c) Withdraw the burner and rest it inside the oven.
Take care as not to damage the wire to the ignition electrode as well as the thermocouple.
d) Using a 7 mm box spanner, unscrew the injector (indicated in figure 22) and replace it using the new LPG injector.
e) Replace the burner repeating the above steps in reverse order.

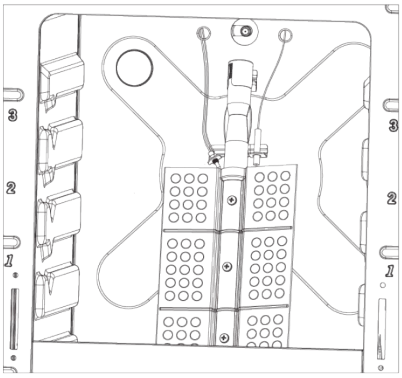

fig. 24

SETTING THE BURNER MINIMUM SETTING

When switching from one type of gas to another, the minimum flow rate must also be correct: the flame should not go out even when passing suddenly from maximum to minimum flame.

The following process applies to the following models:
GR2011CW / GR2012CB / GR2013CSS GR2414CW / GR2415CB / GR2416CSS GRO20P0W / GRO24P0W

1) Light the burner.
2) Set the top burner valve to the minimum position.
3) Remove the knob by pulling straight out.
4) Locate the bypass screw (see illustration).

   Single valve stems are hollow, the bypass screws is located inside the stem.

   Insert the flat head screwdriver (2.5mm x 75mm) into the stem center and turn the bypass screw clockwise to adjust the flame.

   DO NOT OVERTIGHTEN.
5) Replace the knob.
6) Repeat for each of the other burners.

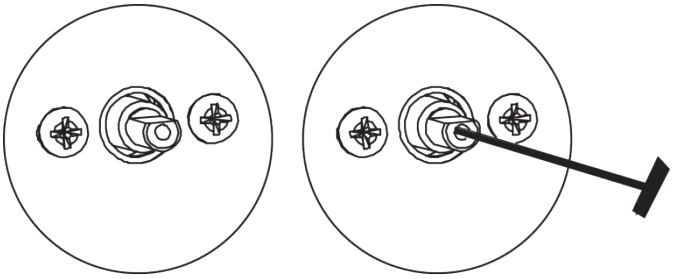

The following process applies to the following models: DGR20P3S / DGR24P3S (COOKTOP)

1) Light the burner.
2) Set the top burner valve to the minimum position.
3) Remove the knob by pulling straight out.
4) Locate the bypass screw behind the left screw (see illustration).

   Remove the left screw.

   Insert the flat head screwdriver (2.5mm x 75mm)
   Into the screw hole and turn the bypass screw clockwise to adjust the flame.

   DO NOT OVERTIGHTEN.
5) Replace the knob.
6) Repeat for each of the other burners.

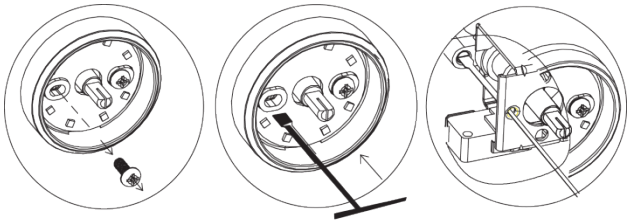

OVEN BURNER SETTING:
The following process applies to the following models:

GR2011CW / GR2012CB / GR2013CSS
GR2414CW / GR2415CB / GR2416CSS
GRO20P0W / GRO24P0W
DGR20P3S / DGR24P3S

1) Light the burner by turning the thermostat to the 500ºF position,
2) Remove the knob by pulling straight out.
   NOTE: For GR and GRO models, skip Steps 3 and 4.
   These models do not have the LED light board and ring.
3) Remove the two (2) Philips head screws that secure the LED light board and ring to the control panel. **(DGR20P3S / DGR24P3S ONLY)**
4) Carefully lift the ring and LED light board away from the control panel to allow access to the access hole below the valve stem. (see illustration). **(DGR20P3S / DGR24P3S ONLY)**
5) Insert the flat head screwdriver (2.5mm x 75mm)
   Into the screw hole and turn the bypass screw clockwise to adjust the flame.

   DO NOT OVERTIGHTEN.

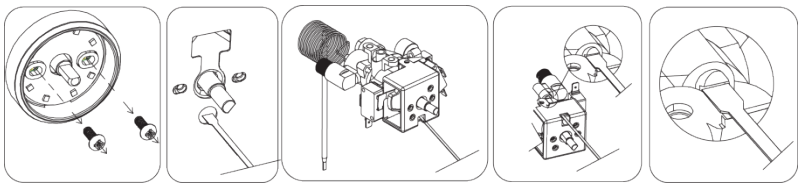

(DGR20P3S / DGR24P3S ONLY)

6) Mount the knob to the valve stem.
7) Allow the oven to heat up for approximately 10 minutes then rotate the knob to the 300ºF position to operate the thermostat by-pass.
   Slowly screw the by-pass screw until you obtain a flame of approximately 3 – 4 mm in height.
8) Carefully replace the ring, LED board and knob ensuring not to damage the LED board and wires.

If codes permit and a separate ground wire is used, it is recommended that a qualified electrician determine that the ground path is adequate.
Check with a qualified electrician if you are not sure whether the range is properly grounded.

Do Not ground to a gas pipe.

A 120-volt, 60-Hz, AC-only, 15-ampere, fused electrical supply is required. A time-delay fuse or circuit breaker is recommended. It is recommended that a separate circuit serving only this appliance be provided.

The outlet must be checked by a qualified electrician to see if it is wired with correct polarity.

This appliance, when installed, must be electrically grounded in accordance with local codes.

Recommended ground method

For your personal safety, this range must be grounded. This range is equipped with a 3-prong ground plug. To minimize possible shock hazard, the cord must be plugged into a mating 3-prong ground-type outlet, grounded in accordance with the National Electrical Code ANSI / NFPA 70 latest edition and local codes and ordinances. If a mating outlet is not available, it is the personal responsibility and obligation of the customer to have a properly polarized and grounded, 3-prong outlet installed by a qualified electrician.

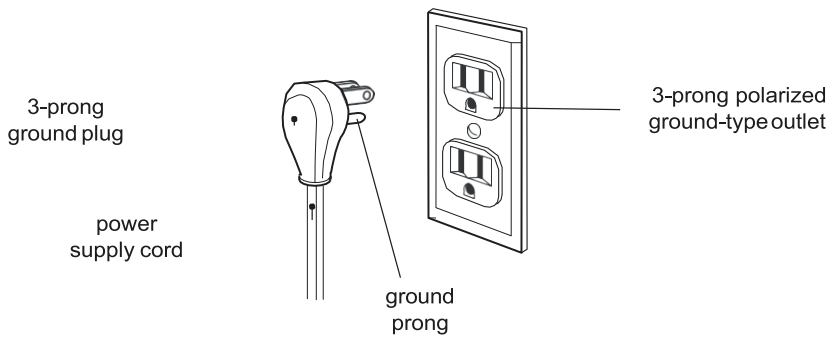

Fig. 26

⚠ WARNING

Electrical Shock Hazard

Plug into a grounded 3 -prong outlet.

Do not remove ground prong.

Do not use an adapter.

Failure to follow these instructions can result in death, fire, or electrical shock.

Fig. 27

WARNING
VERY IMPORTANT

Before any operation of maintenance disconnect the appliance from the electrical mains supply.

ELECTRICAL CONNECTION

GR2011CW/GR2012CB/GR2013CSS GR2414CW/GR2415CB/GR2416CSS

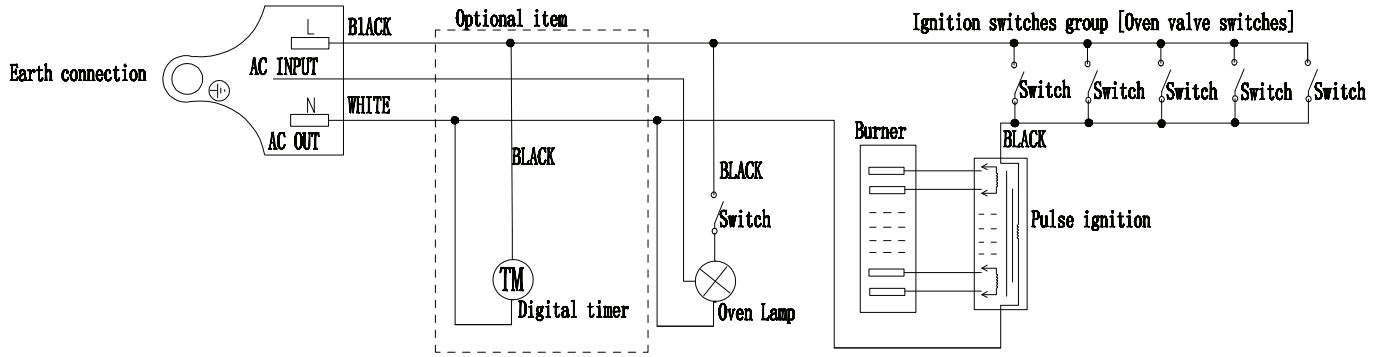

GRO20P0W/GRO24P0W

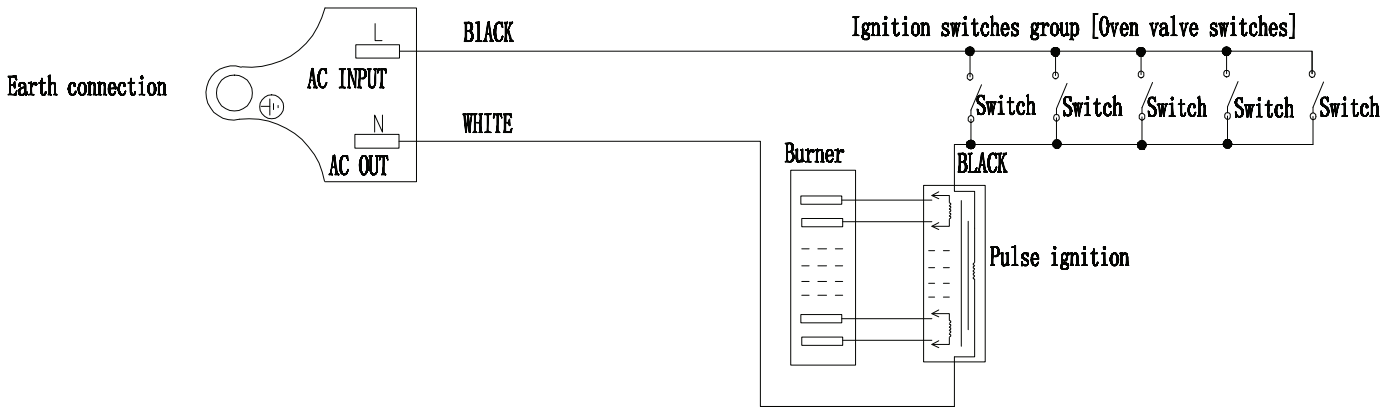

DGR20P3S

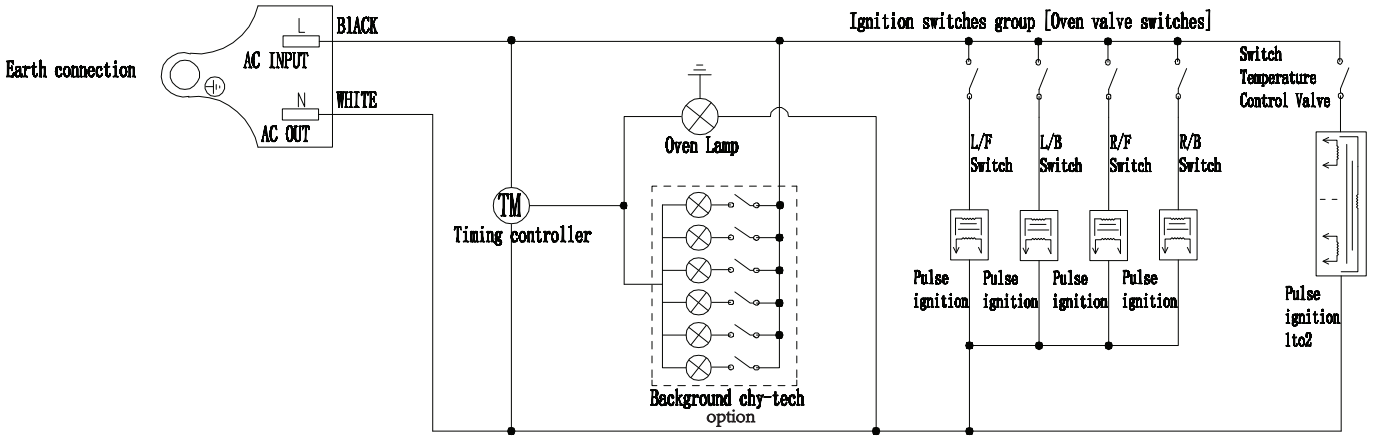

DGR24P3S

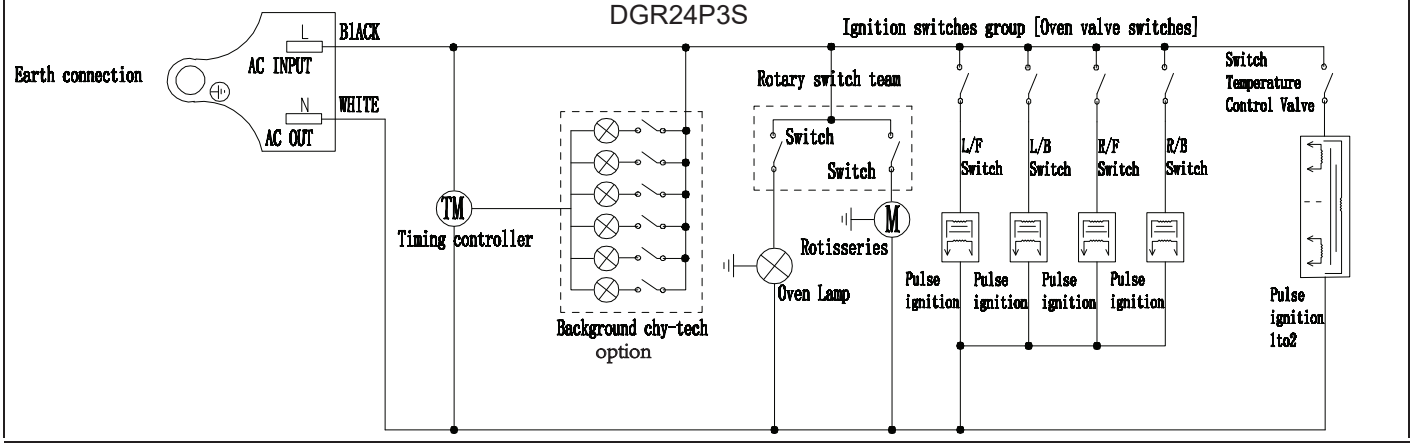

Gas range installation manual	092126JC	PRINTED IN CHINA