KINGSTON

Plastic Pop-Up
Installation Instructions

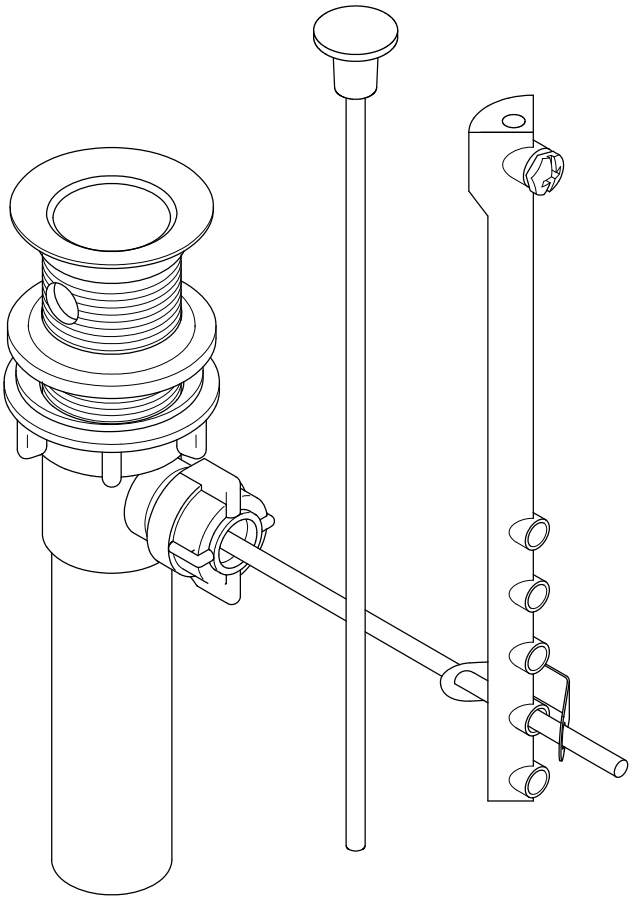

NOTICE

Failure to follow all directions may cause leaks which may result in water damage

www.kingstonbrass.com

TOLL-FREE CUSTOMER SERVICE: 1-877-2-KBRASS
TECHNICAL SUPPORT E-mail: service@kingstonbrass.com
12775 Reservoir Street, Chino, CA 91710

Tools Required

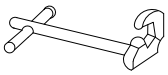
Basin Wrench

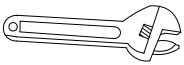
Adjustable Wrench


Teflon Tape

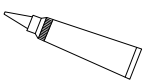
Silicone Sealant

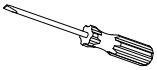
Screwdriver

INSTALLATION:

1. Remove the flange (2), plug (1) from the drain body (6).
2. Apply a small bead of silicone caulking (Do not use plumbers putty) under drain flange (2), then push the flange (2) into the drain opening.
3. Turn the lock nut (5) downwardly to the lower position of drain body (6). Push washer (4) and rubber gasket (3) down.
4. Insert drain body (6) upwardly with (3)/(4)/(5) parts through the drain opening from the underside of sink. Then turn the drain body (6) in clockwise by hand to thread-connect with the flange (2) as tightly as possible.
5. Slightly adjusting the drain body (6) or the flange(2) to make sure the side hole of drain body (6) positioned toward the rear wall.
6. Move up rubber gasket (3), washer (4) and tighten up the lock nut (5) with a wrench until the rubber gasket (3) can completely and tightly seal the drain opening beneath the sink.
7. Insert the plug (1) into the flange (2). Make sure the plug's bottom hole is aligning with and the side with bottom hole is near the side hole of drain body (6).
8. Remove the nut (8) from the side hole of drain body. Make sure a plastic bushing is present on the side hole and its concave surface is facing out. Remove clip (9) from ball rod (7).
9. Insert the short side of ball rod (7) in side hole of drain body (6), making sure the rod goes through the bottom hole of plug (1). Connect the nut (8) onto the side hole and tighten it by hand.
10. Move the ball rod (7) up and down to test the plug (1) can open and close smoothly.
11. Connect pop-up rod (12) and ball rod (7) with lift rod strap (10). Try and test the proper connection position, then fix them by clip (9) and set screw (11) tightening.
12. Pull up the pop-up rod (9) to the closed position of the plug (1), then turn on the faucets to fully fill the sink with water. Examine and ensure that no water is leaking from the drain body (6).
13. Push down the pop-up rod (12) to the open position of plug (1) to drain water.
    Examine to make sure no water leakage around the rubber gasket (3) or side hole of drain body. If leakage found, adjust the rubber gasket (3), re-tighten up the lock nut (5) or the nut (8) on side hole until no more leakage found.

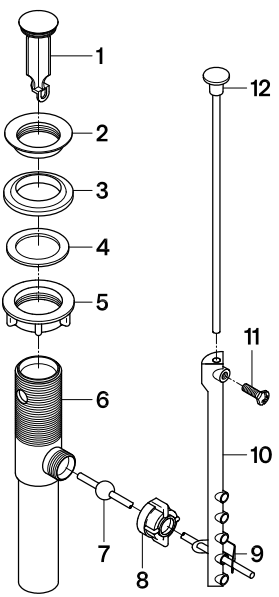

©2025 LVC Kingston LLC. All Rights Reserved.
2025-07-G