Important :

Before you begin Installation please read the following instructions, observe all local plumbing and building codes.

- Check area where tub will be installed to ensure that it is leveled and structurally sound.
- Please unwrap the tub and check it carefully for any damage that may have occurred during transportation.
- Check that all parts are included.
- If you have any missing parts, damage is found or have any questions regarding the installation process contact customer service at (877)-252-7277.
- Store bathtub in a safe place until you begin installation to avoid damage to the tub's surface.
- No claims for damages or blemishes will be accepted once the tub has been installed.
- We recommend that the installation of this tub be done by a qualified licensed professional.
- Because of its weight and volume we recommend that the installation of this tub be done with the help of at least one other person, a fall even what may seem like a minor one may result in cracking of the tub, moving straps and rubber gripped gloves are recommended.
- These Installation instructions do not include details of waste connections, the final details should be determined by your contractor.

Cleaning and Maintenance :

Because White Stone is a very durable non porous material, resistant to scratches, stains and discoloration, it is very easy to maintain, however, there are a few do's and don'ts that will ensure that your tub does not loose its luster throughout the years.

- Do clean it with a soft dry cloth after use.
- Do not use abrasive cleaners, cleaners containing acid, alkali or ammonia to remove stains.
- Do not expose the surface of this tub to hair dye or nail varnish as this may cause stains.

Your tub includes a sheet of extra fine grit sanding paper, If your tub develops minor scratches they may be removed by scrubbing gently with the fine grit sand paper, a soft brush or a non-abrasive sponge and a mild abrasive cream cleaner, in addition, should the minor scratches remain or you would like to polish the area in question to its original finish, you can perform the following procedure.

Gloss Finish :

- Clean the surface with water, making sure no dust remains.
- Using water, polish the area starting with 800 grit sand paper, then 1500 grit and finally 2000 grit, if a finer finish is desired you can give it a final sanding/polishing with 3000 grit sandpaper.
- Dry using a clean dry cloth.
- Polish with G3 or 3M extra cut Compound, wax and polish by hand or using a mechanical polishing machine.
- Wipe up the remaining wax with a clean and dry cloth.

Matte finish :

- Clean the surface with water, make sure no dust remains.
- Using water, polish the area starting with 800 grit sand paper.
- Wipe up the remaining wax with a clean dry cloth.

KINGSTON

AQUA EDEN

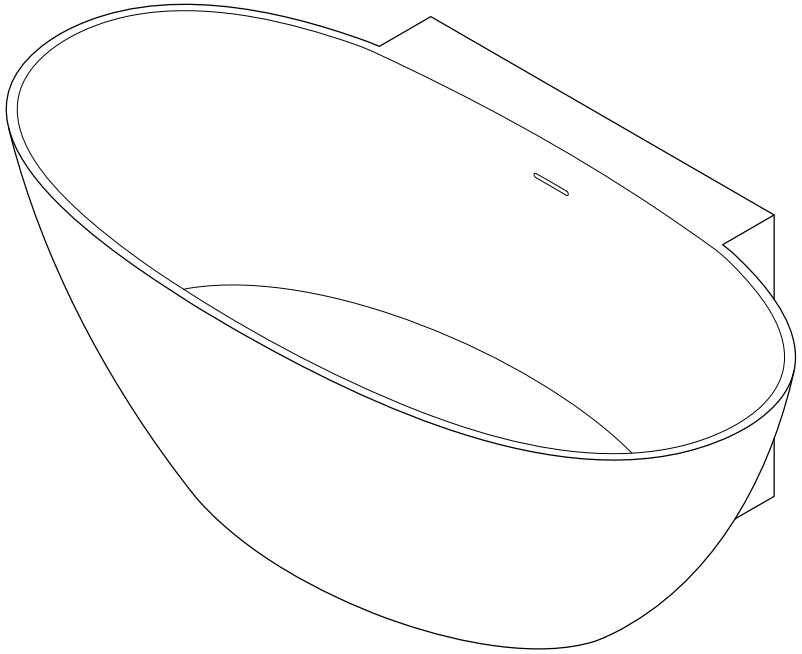

www.kingstonbrass.com

TOLL-FREE CUSTOMER SERVICE: 1-877-2-KBRASS
TECHNICAL SUPPORT E-mail: service@kingstonbrass.com
12775 Reservoir Street, Chino, CA 91710

NOTICE

Failure to follow all directions may cause leaks which may result in water damage



⚠WARNING

Lifting hazard.

Single person lift could cause injury.
Use assistance when moving or lifting.

KINGSTON

AQUA EDEN

Solid Surface White Stone Bathtub
Installation Instructions

Caution :

This bathtub is heavy. Get help lifting and moving this tub. Read all instructions thoroughly before starting the installation.

Important Points to Remember :

1. Provide adequate floor support.
2. Make sure the subfloor is level. Provide drain access from below. Provide access to all plumbing connections. Observe local building and plumbing codes.

1

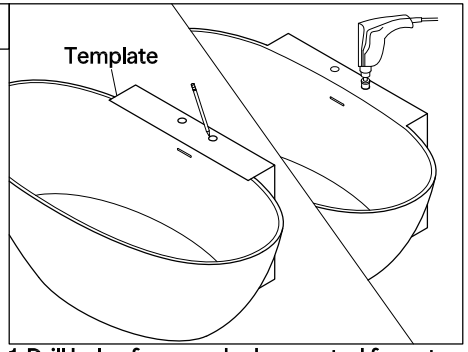

1. Drill holes for your deck mounted faucet by placing the attached template on top of the deck, this template is premeasured for a 7" center to center faucet requiring 2 holes only, if your faucet requires the drilling of additional holes or a different center to center dimension, please adjust accordingly. Once the location of the holes has been determined, drill 1-3/8" holes and install faucet as per the manufacturers installation instructions.

2

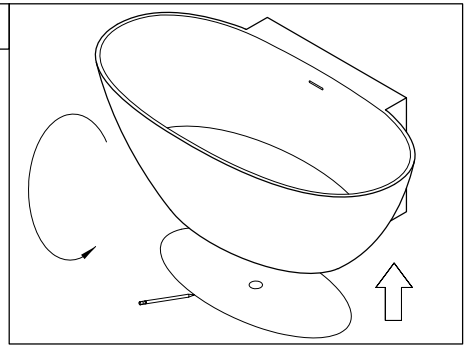

2. Position the tub at the desired location, with a pencil mark the perimeter of the tub, also mark the location of where the tub drain will be situated, remove tub and place upside down on a blanket or piece of cardboard.

3

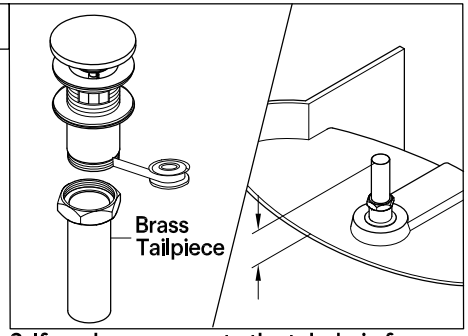

3. If you have access to the tub drain from below the floor, apply Teflon tape to the drain and thread the included tailpiece. Measure how far it protrudes from the bottom of the tub, then rough in your drain pipe accordingly.

4

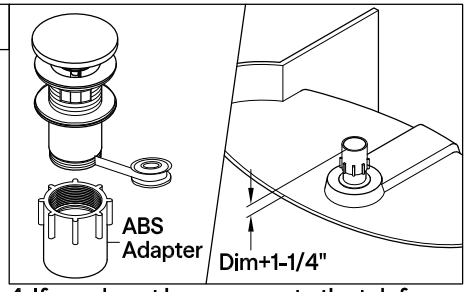

4. If you do not have access to the tub from below the floor, your tub includes an ABS adapter for a 1-1/2" drain, apply Teflon tape to the threading on the drain and install the tub drain adapter, tighten by hand until secure, measure the distance between the bottom of the drain adapter and the floor, add 1-1/4" that should give you the height of the drain pipe, you can measure the distance to the floor by placing a piece of lumber across the bottom of the tub and using that as your guide to determine the floor level.

Tools Required

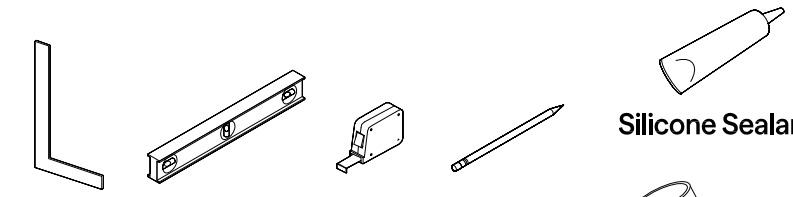

5

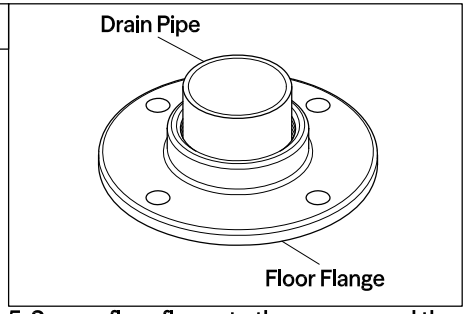

5. Secure floor flange to the area around the drain, this will serve as additional reinforcement to keep your tub drain in place in the event of any accidental impact on the tub.

6

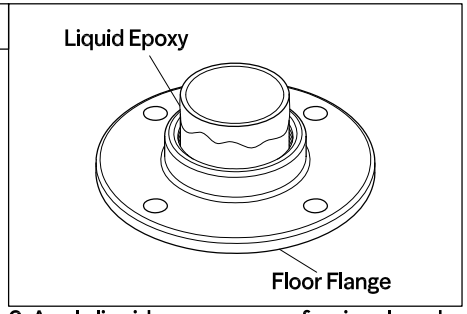

6. Apply liquid epoxy or a professional grade ABS glue or JB weld epoxy to the drain pipe coming from the floor, apply as per manufacturer's instructions.

7

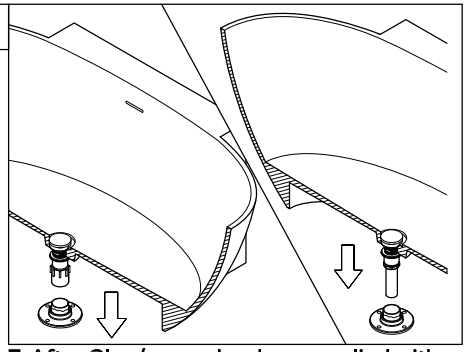

7. After Glue/ epoxy has been applied with the help of two or more people slowly pick up the tub and align the tub drain adapter to the drainage pipe, set tub in place.
If you installed the tailpiece to your drain, with the help of two or more people slowly pick up the tub and align the tailpiece to the drainage pipe, set tub in place, from below secure tailpiece to your drain pipe.

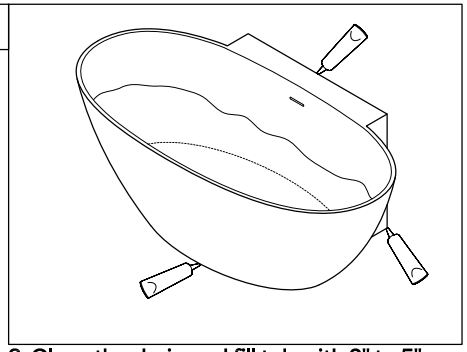

8. Close the drain and fill tub with 2" to 5" with water, while inspecting the connections from below the floor drain the tub and check for leaks.
Apply caulking around the perimeter as needed, clean excess caulking.

©2025 LVC Kingston LLC. All Rights Reserved.
2026-05-T