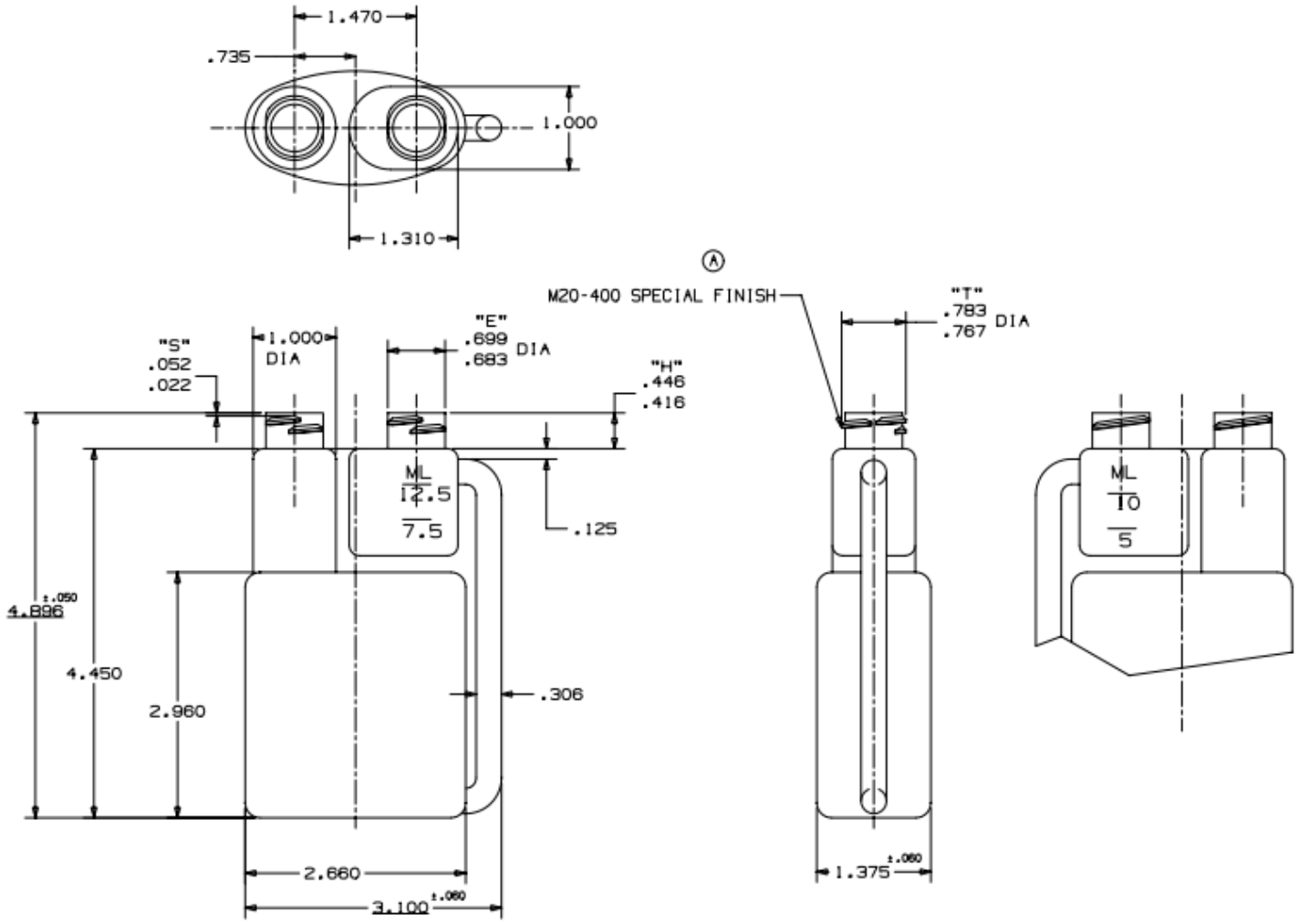

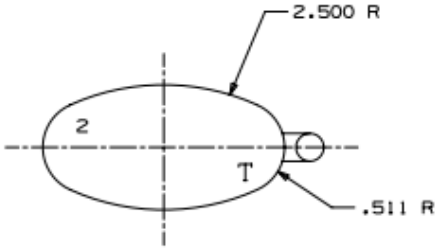

NOTES :

1) OVERFLOW CAPACITY : 4.90 ± .17 FL.OZ. (145.0 ± 5.0 CC'S.)

2) WEIGHT : 21.5 ± 1.5 GRAMS

DISCLAIMER

THIS INFORMATION IS PROVIDED AS A GENERAL GUIDE, INCLUDING DIMENSIONS. IT IS THE CUSTOMER'S RESPONSIBILITIES TO SELECT THE PROPER CONTAINER FOR PRODUCT AND APPLICATION COMPATIBILITY.

DISTRIBUTED BY: Pipeline Packaging

REF NO.: DWG30546

DESCRIPTION: 4 oz HDPE Twin Neck Bettix, 20-400, 12.5 ml Chamber, 21.5 Gram