KINGSTON

TO ORDER PARTS, CALL: 1-877-252-7277
www.kingstonbrass.com

KGKFA301810LD

30" Solid Surface White Stone Farmhouse Single Bowl Kitchen Sink Combo

Part #	QTY
1.	1
2.	1
3.	1
4.	1
5.	1
6.	1
7.	1
8.	1
9.	1
10.	1

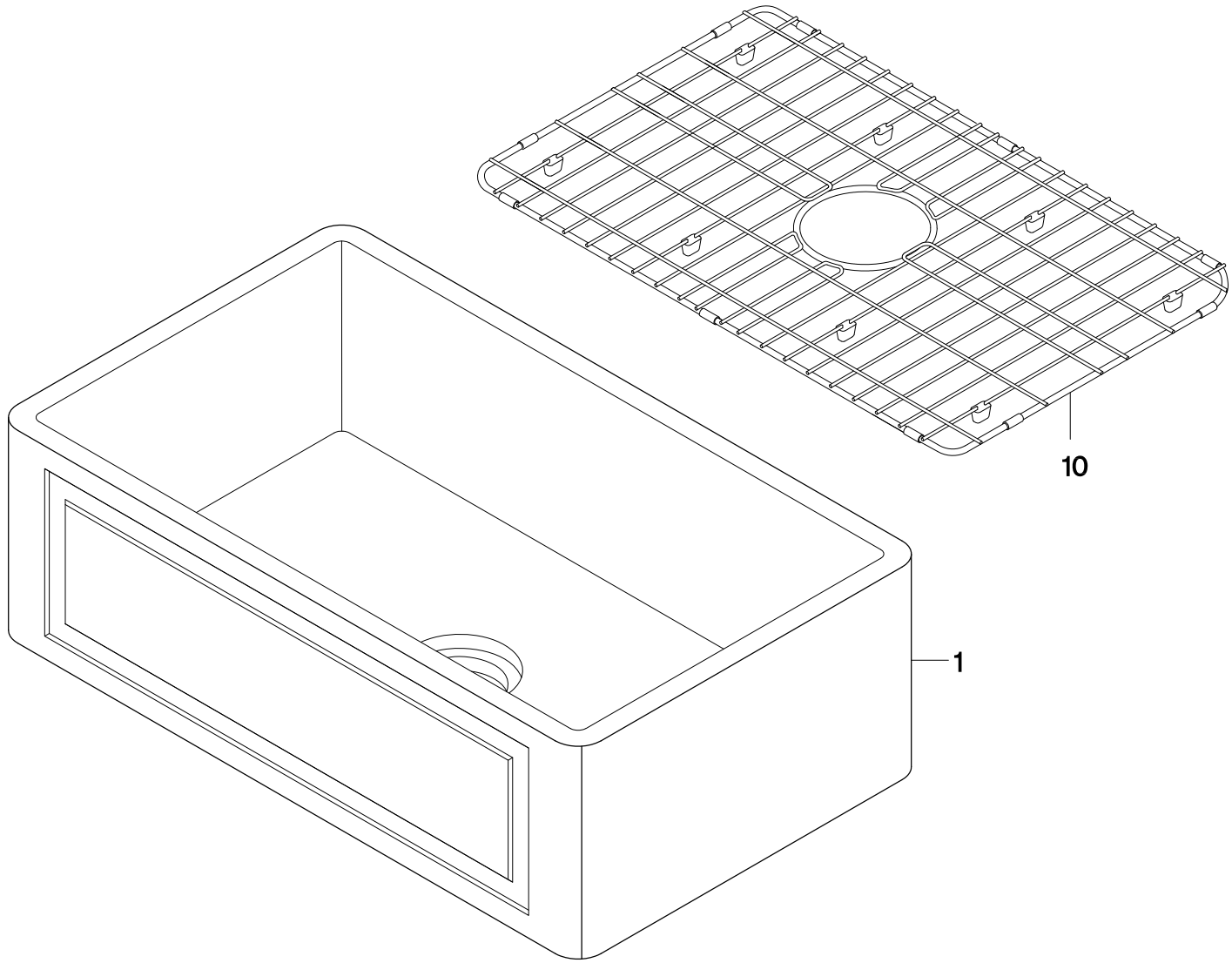

2026-04-A