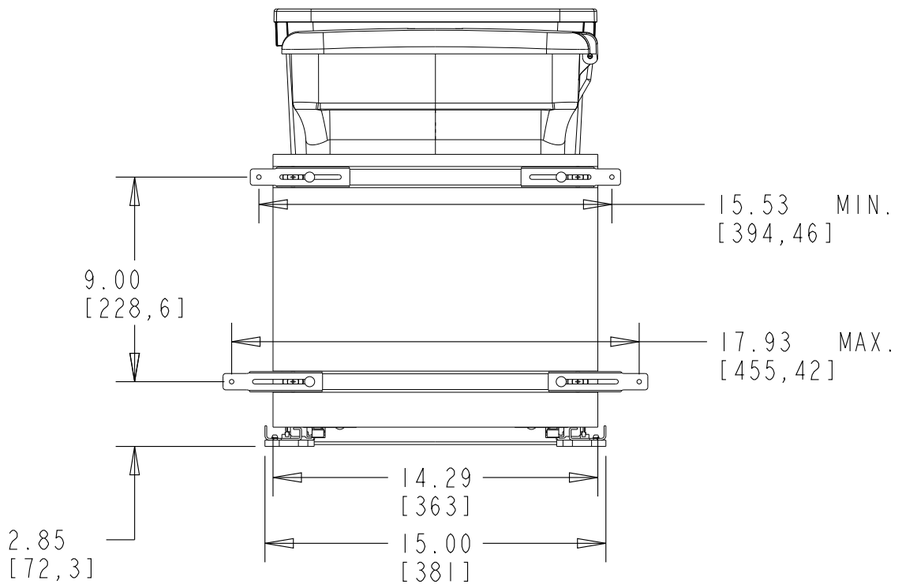

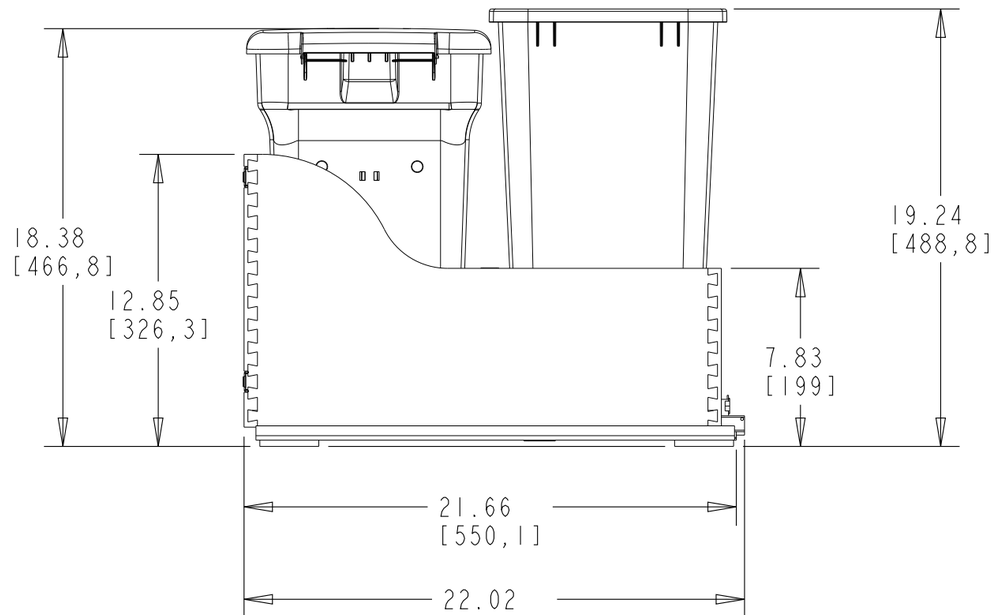

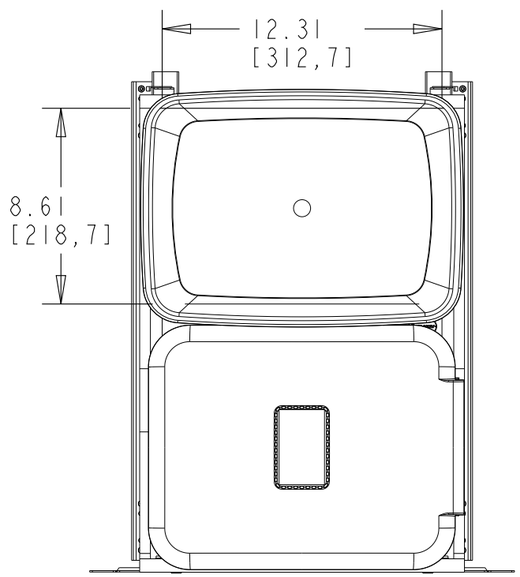

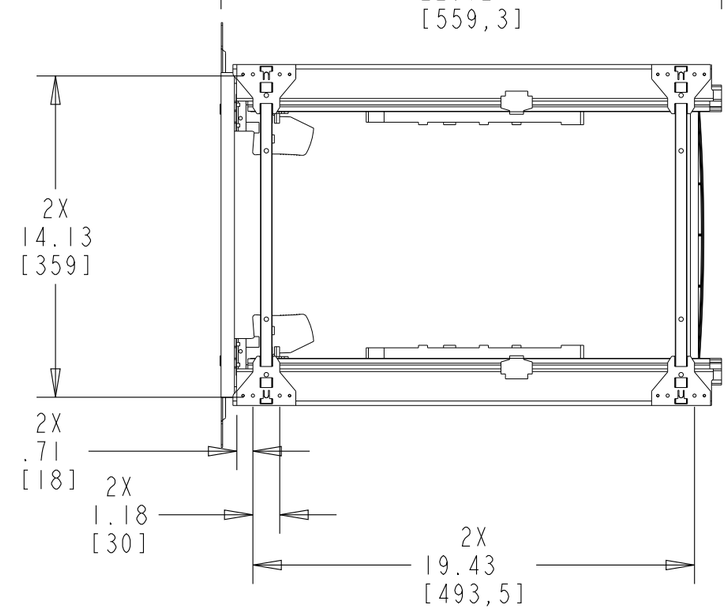

NOTES:
1. FINISH: MAPLE
2. HOLDS "1" 24 QUART COMPOKEEPER WITH LID
3. HOLDS "1" 35 QUART WASTE CONTAINER WITH NO LID

CUSTOMER DRAWING

REV.	DATE	BY	DESCRIPTION OF CHANGE

			BY	DATE	REV-A-SHELF® INC.
INCH [MM]	AMERICAN PROJECTION	DRAWN	JMC	1/23/19	SIZE B — COMPO KEEPER W/35 QT BIN & SC
TOLERANCES: MAT. DEC. (WOOD) .XX ±.03 [.8mm] (OTHER) .XX ±.02 [.5mm] (ALL) .XXX ±.005 [.13 mm] FRACTIONS ±1/32 [.8 mm]		ANGLES ±1/2°	MATERIAL		DRAWING NO. 4WCSC-1835CKXX-2 — SCALE 0.150
			FINISH		PART NO. 4WCSC-1835CKXX-2 — SHEET 1 OF 2

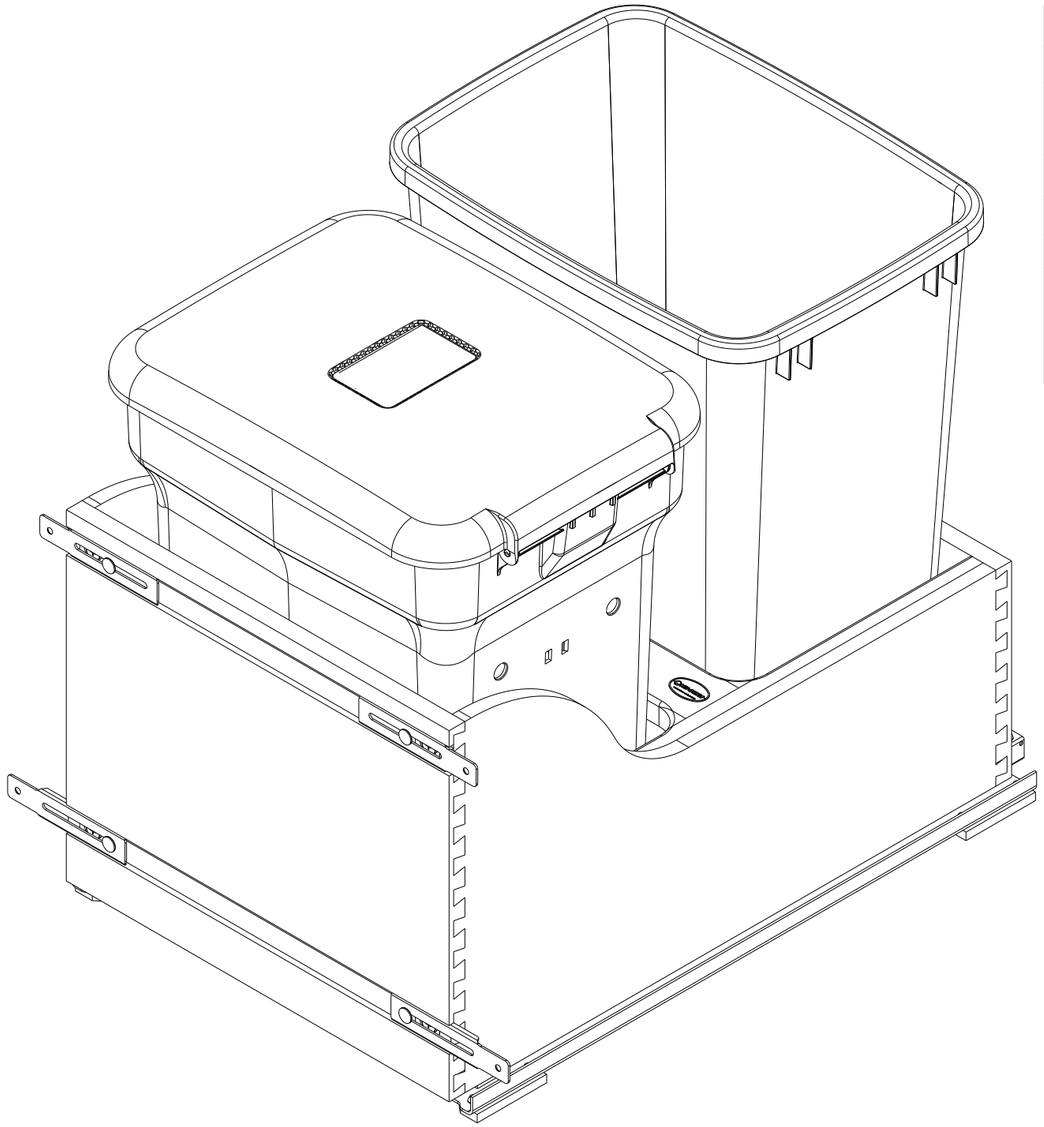

PART DIMENSIONS		
	MIN	MAX
WIDTH	15.00	
DEPTH	22.00	
HEIGHT	19.25	
WEIGHT		
DIAMETER		
RADIUS		
CONTAINER CAPACITY	24 COMPO AND 35 WASTE CONATINER	
CONTAINER UOM	QUART	

MIN CABINET OPENING	
WIDTH	15.00
DEPTH	22.00
HEIGHT	19.50

PRODUCT MAX WEIGHT RATING

SLIDE SPECIFICATIONS				
SLIDE TYPE	UNDERMOUNT	SLIDE EXTENTION	FULL	MAX WEIGHT RATING
SLIDE CLOSING	SOFT	SLIDE LENGTH	21"	
SLIDE MOUNTING	BOTTOM	SLIDE FINISH	ZINC	110 LBS

XX = BLACK - BK
GREEN - GR
WHITE - WH
ORION GRAY - OG

CUSTOMER DRAWING

REV.	DATE	BY	DESCRIPTION OF CHANGE

INCH [MM] — AMERICAN PROJECTION

	BY	DATE
DRAWN	JMC	1/23/19

TOLERANCES
MAT. DEC.
(WOOD) .XX ±.03 [.8mm]
(OTHER) .XX ±.02 [.5mm]
(ALL) .XXX ±.005 [.13 mm]
FRACTIONS ±1/32 [.8 mm]
ANGLES ±1/2°

REV-A-SHELF® INC.

SIZE B — COMPO KEEPER W/35 QT BIN & SC

MATERIAL

FINISH

DRAWING NO. 4WCSC-1835CKXX-2

SCALE 0.250

PART NO. 4WCSC-1835CKXX-2

SHEET 2 OF 2