KINGSTON

TO ORDER PARTS, CALL: 1-877-252-7277
www.kingstonbrass.com

CCK266PXK0,1,2,3,5,6,7,8

Freestanding Tub Filler Package

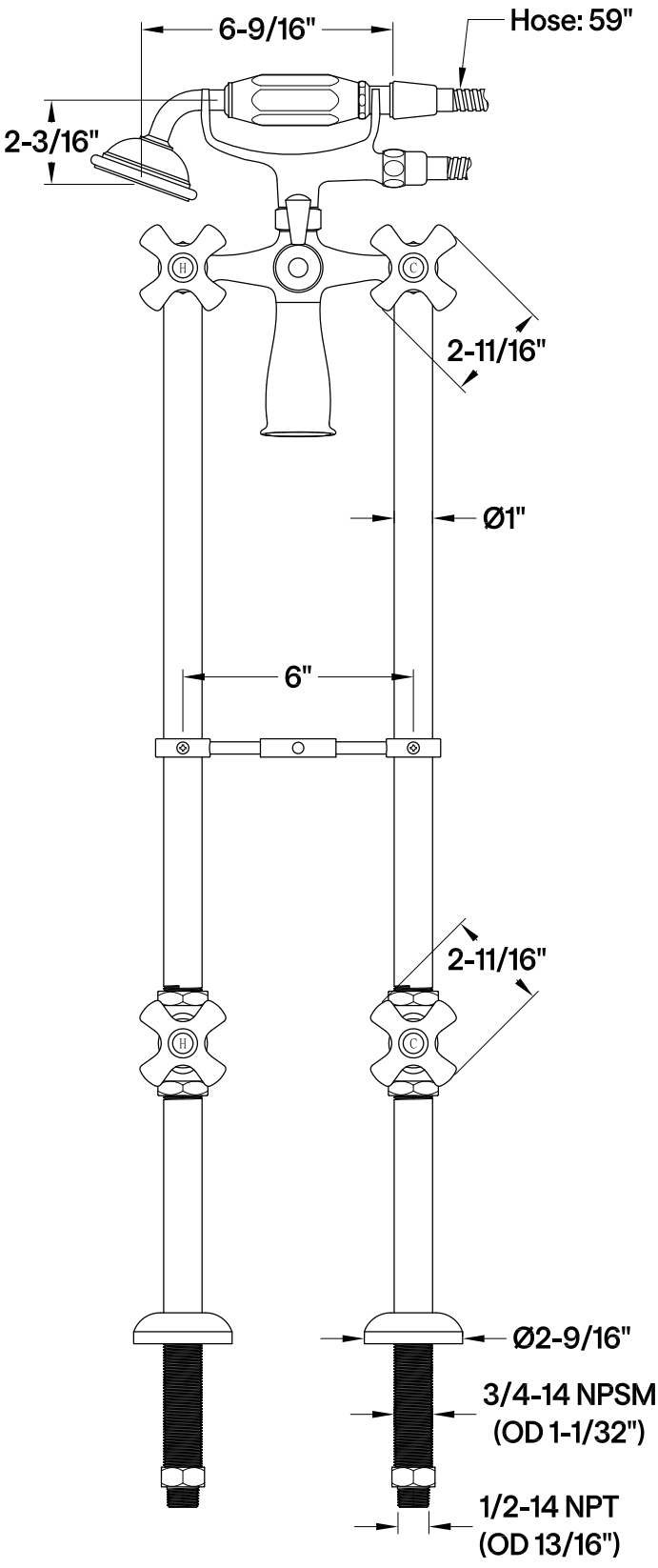

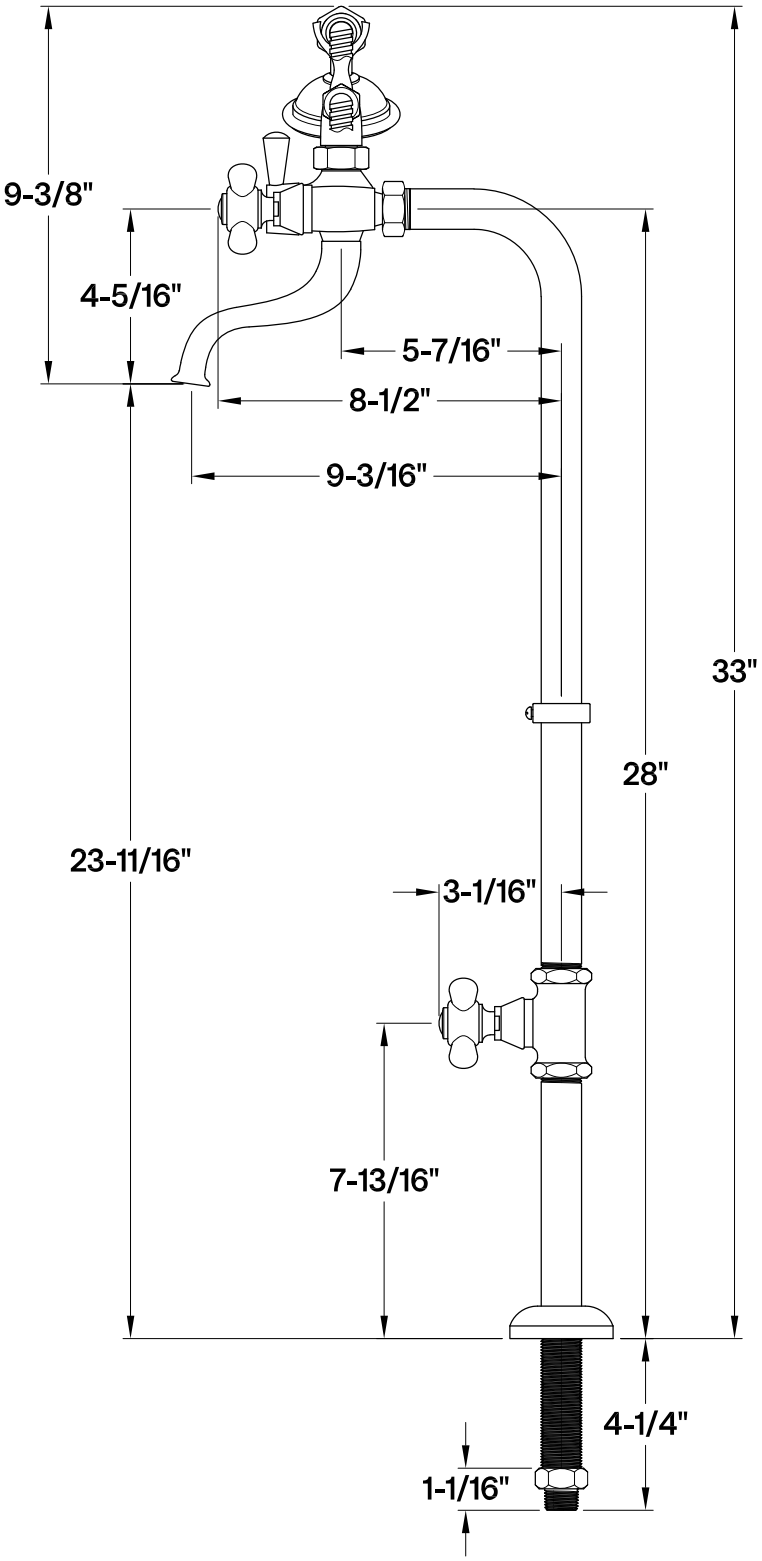

2026-02-A