THAMES & KOSMOS

V8 Race Car

Experiment Manual



Franckh-Kosmos Verlags-GmbH & Co. KG, Pfizerstr. 5-7, 70184 Stuttgart, Germany | +49 (0) 711 2191-0 | www.kosmos.de
Thames & Kosmos, 89 Ship St., Providence, RI, 02903, USA | 1-800-587-2872 | www.thamesandkosmos.com

KIT CONTENTS

Good to know!

If you are missing any parts, please contact Thames & Kosmos technical support.

What's inside your experiment kit:

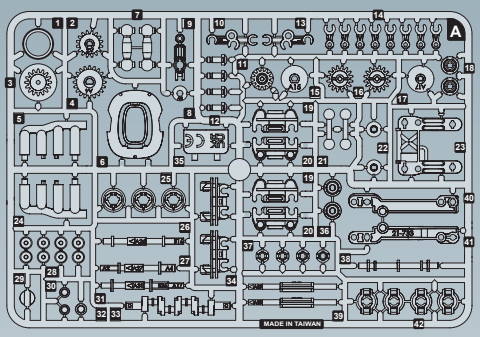

A

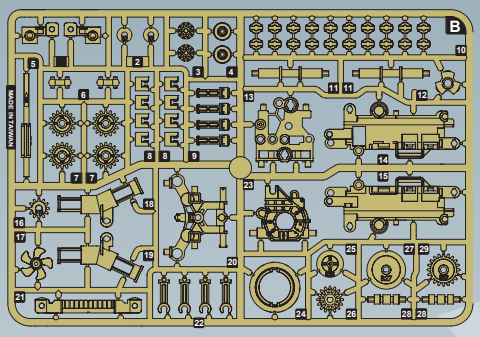

B

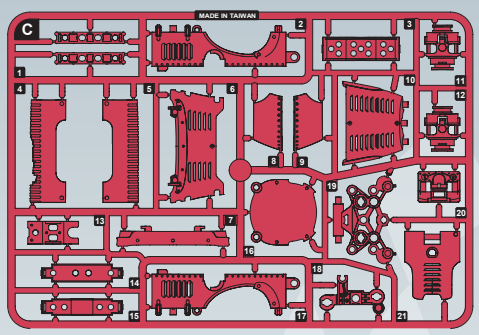

C

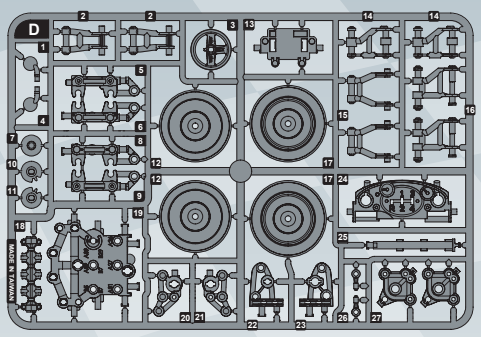

D

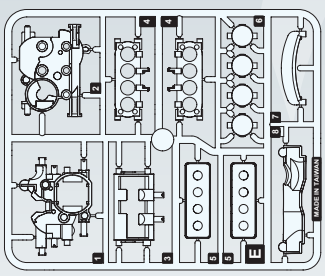

E

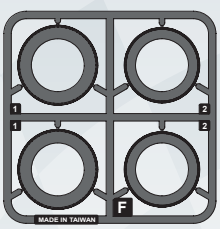

F

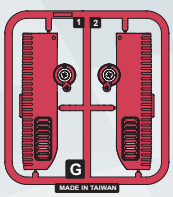

G



P1

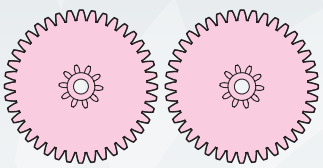

P2

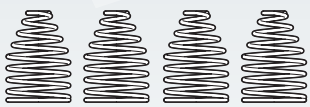

P3

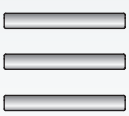

P4

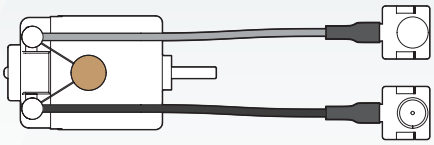

P5



P6

Wow!

So many parts!

TABLE OF CONTENTS

Kit Contents ..... **Inside Front Cover**
Table of Contents **1**
Safety Information **2**
Important Information **3**

ASSEMBLY INSTRUCTIONS START ON PAGE 4

Assembling the Transmission 4
Assembling the Rear Suspension 11
Check it Out **12**
Assembling the Front Suspension 17
Assembling the V8 Engine 21
Assembling the Steering Column 24
Assembling the Chassis 25
Assembling the Body 32

Inserting and Replacing the Batteries **36**
Check it Out **38**
Operating Instructions **40**

TIP

YOU WILL FIND ADDITIONAL INFO IN THE "CHECK IT OUT" SECTIONS ON PAGES 12–13 AND 38–39.



Checklist:

✓	No.	Description	Quantity	Part No.
○	P1	Gear (white)	1	731029
○	P2	Gear (pink)	2	731029
○	P3	Metal spring	4	731029
○	P4	Round metal rod	3	731029
○	P5	Motor with battery connection	1	731143
○	P6	Switch with battery connection	1	731142
○	A	Frame A with parts A1 – A42	1	731021
○	B	Frame B with parts B1 – B29	1	731022
○	C	Frame C with parts C1 – C21	1	730124
○	D	Frame D with parts D1 – D27	1	730125
○	E	Frame E with parts E1 – E8	1	730126
○	F	Frame F with parts F1 – F2	1	730127
○	G	Frame G with parts G1 – G2	1	730128

YOU WILL ALSO NEED:

Small Phillips-head screwdriver (PH1), diagonal cutter or scissors and nail file, 2 AAA batteries (1.5-volt, type LR03)

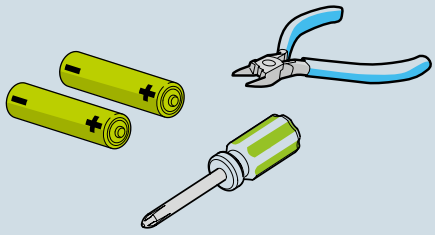

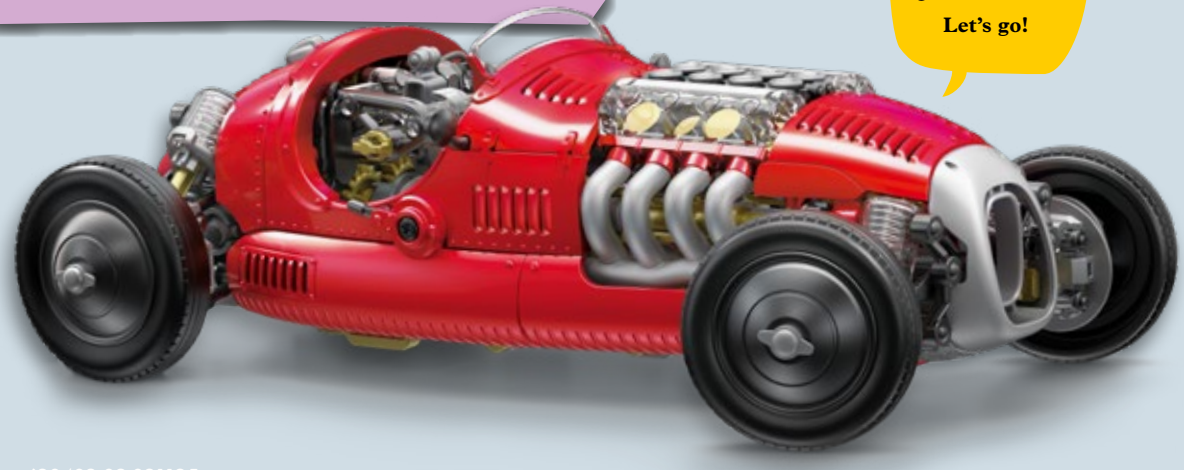

WARNING

Not suitable for children under 3 years. Choking hazard — small parts may be swallowed or inhaled.

WARNING! This toy is only intended for use by children over the age of 10 years, due to accessible electronic components. Instructions for parents or caregivers are included and shall be followed. Keep packaging and instructions as they contain important information.

WARNING! Some parts of this kit have functional sharp points, corners, or edges. Do not injure yourself!

May only be operated when fully assembled. Proper assembly must be checked by an adult before use.

SAFETY FOR EXPERIMENTS WITH BATTERIES

- To operate this kit, you need two AAA batteries (1.5-volt, type LR03), which could not be included in the kit due to their limited shelf life.
- Inserting, removing, and replacing batteries should be done by an adult or under adult supervision.
- Avoid a short circuit of the batteries. A short circuit can cause the wires to overheat and the batteries to explode.
- Different types of batteries (e.g. rechargeable battery and non-rechargeable battery) or new and used batteries are not to be mixed.
- Do not mix old and new batteries. Do not mix alkaline, standard (carbon-zinc), or rechargeable (nickel-cadmium) batteries.
- Batteries are to be inserted with the correct polarity (+ and -). Press them gently into the battery compartment (see page 37). This page also explains how to insert, remove, and change the batteries.
- Non-rechargeable batteries are not to be recharged. They could explode!
- Rechargeable batteries are only to be charged under adult supervision.
- Rechargeable batteries are to be removed from the toy before being charged.
- Exhausted batteries are to be removed from the toy.
- The supply terminals are not to be short-circuited.
- Dispose of used batteries in accordance with environmental provisions, not in the household trash.
- Dispose of electrical equipment/electrical parts separately and in accordance with environmental regulations.
- Avoid deforming the batteries.
- The wires are not to be inserted into socket outlets.
- The device is not to be connected to more than the recommended number of power supplies, this means only use the included battery box.
- Remove batteries from the toy (V8 Race Car) if it is not in use for an extended period.
- To protect the electrical and mechanical components, we recommend operating the V8 Race Car indoors only. Avoid contact with metal objects and liquids of any kind!

NOTES ON DISPOSAL OF ELECTRIC AND ELECTRONIC COMPONENTS

The electronic components of this product are recyclable. For the sake of the environment, do not throw them into the household trash at the end of their lifespan.

They must be delivered to a collection location for electronic waste, as indicated by the following symbol:



Please contact your local authorities for the appropriate disposal location.

IMPORTANT INFORMATION

Dear parents and supervising adults!

Children want to explore, understand, and create new things. They want to try things and do it by themselves. They want to gain knowledge! They can do all of this with Thames & Kosmos experiment kits. With every single experiment, they grow smarter and more knowledgeable.

— Before beginning the experiments, read through the instructions along with your child, discuss the safety notes, and keep them on hand for reference. Support your child with advice and a helping hand, especially during tricky assembly steps.

— If your child is working at a table, provide them with a protective surface to prevent damage to furniture.

— When cutting the plastic parts out of the frames with the diagonal cutter or scissors, special care must be taken, not just because of the sharp edges on the tools, but also because the plastic parts can yield sharp edges or burrs. These can be removed with the help of the diagonal cutter or a nail file. Supervise your child when they are using the sharp tools until you trust that they can handle the tools independently.

Building the V8 Race Car is an exciting and educational project that will take several hours. Ideally, it's best to do it in a location where the materials can be left out, so you don't have to constantly move them around.

We hope you and your child have a lot of fun building and playing with the V8 Race Car!

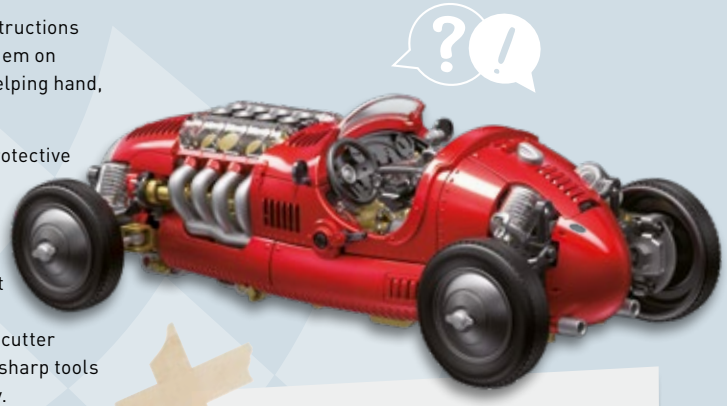

THE RIGHT TOOL

The right tool can make assembling your model much easier and it can also make your model work better in the end. It is best to cut the plastic parts out of their frames with a small diagonal cutter (such as those used for electronics work) or model pliers. Using these tools, the parts can be precisely cut so that no burrs remain on the parts and there is no need to file them down. If you don't have these pliers at home, you can use scissors and a nail file. Normal scissors do not cut as precisely as a diagonal cutter, so you may have to file some of the rough edges down with the nail file.



TIP

IMPORTANT:

REMOVE THE PARTS FROM THE FRAMES ONLY WHEN THEY ARE NEEDED. REMOVE EXCESS MATERIAL BEFORE ASSEMBLY WITH THE HELP OF A DIAGONAL CUTTER OR SCISSORS AND A NAIL FILE.

Do not remove the parts with your hands!

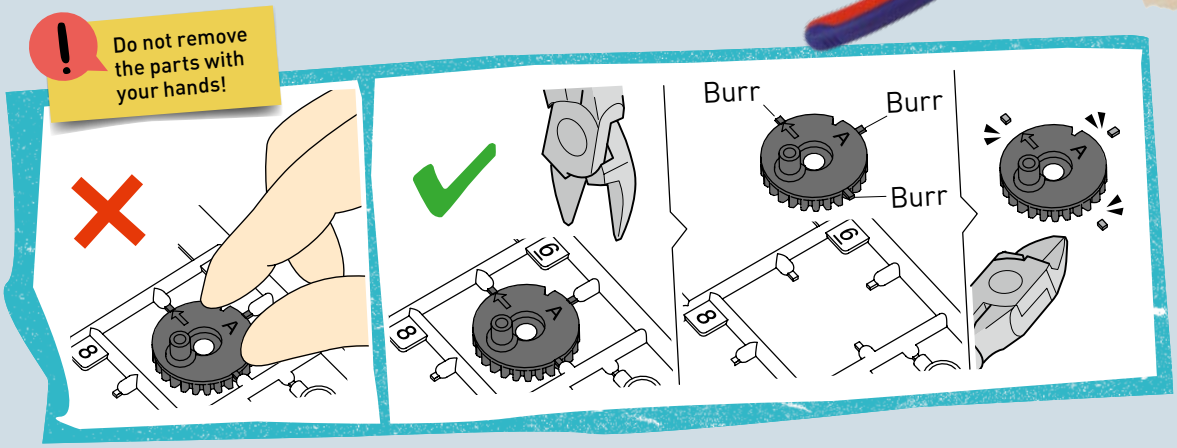

1

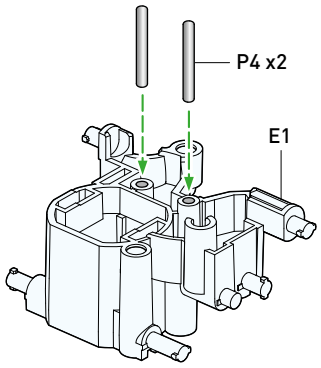

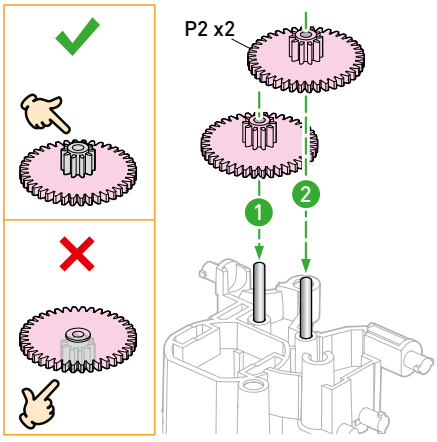

Remove all burrs.

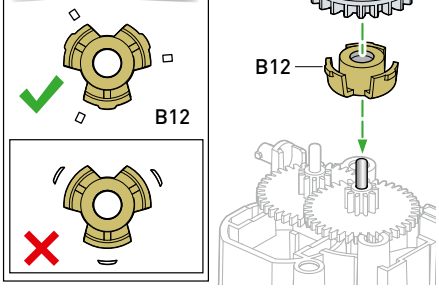

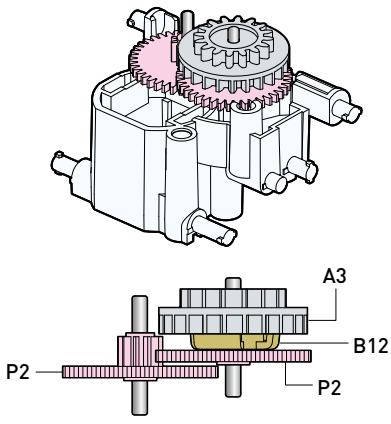

2

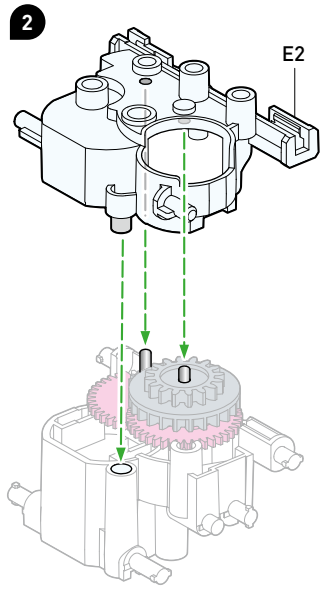

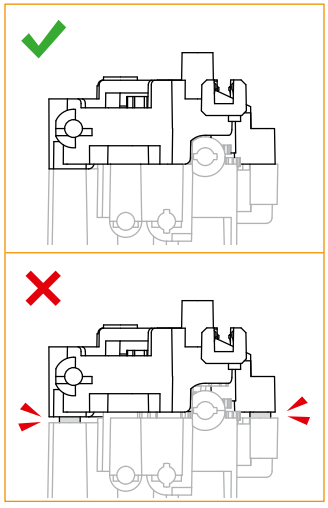

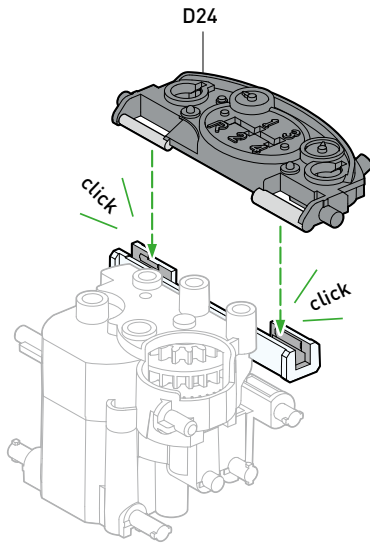

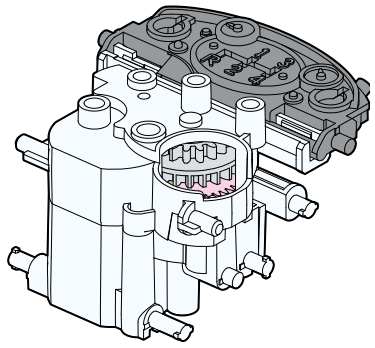

Engine gearbox

Turn the gear with your fingers to make sure it turns smoothly. If it doesn't, return to step 1.

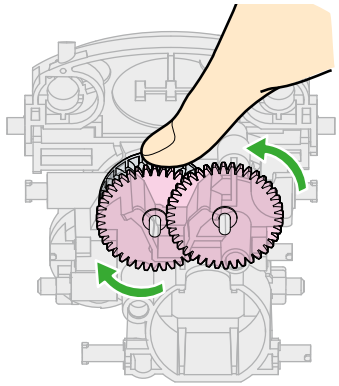

3 Remove all burrs.

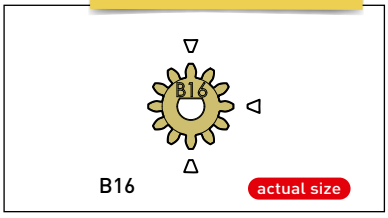

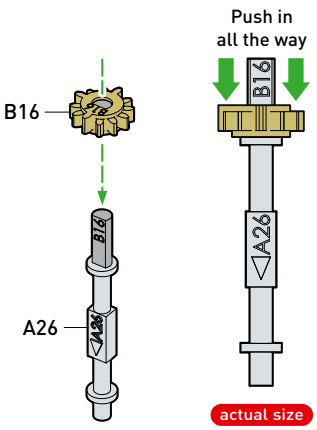

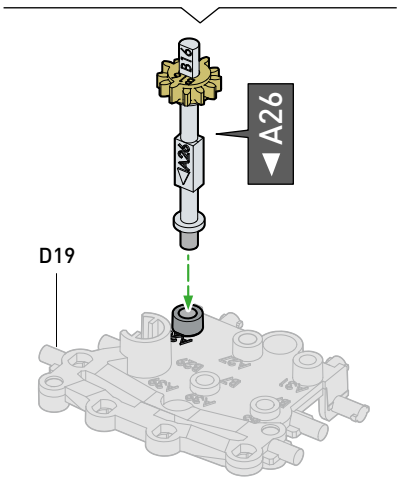

4 Remove all burrs.

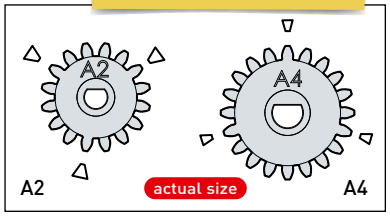

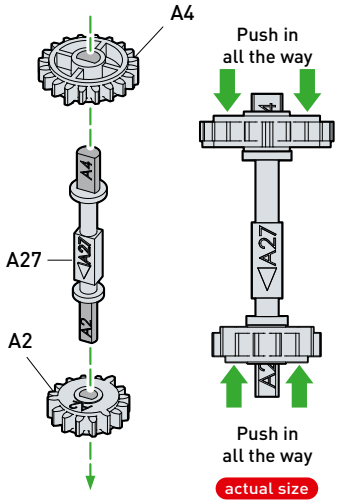

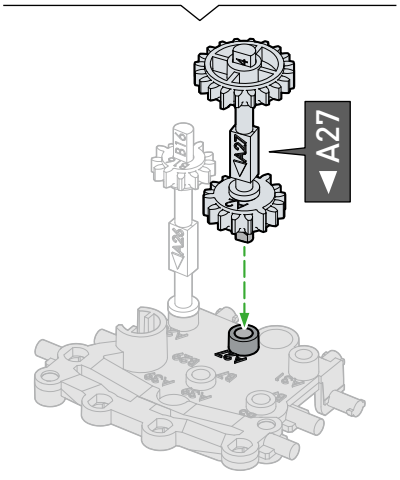

5 Remove all burrs.

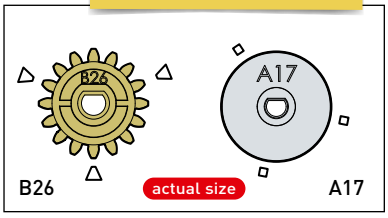

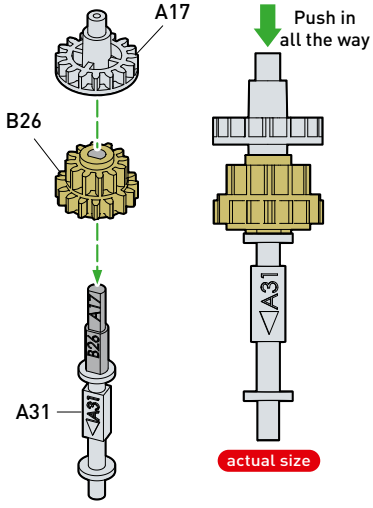

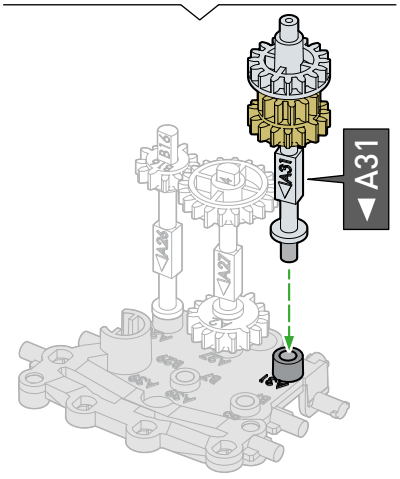

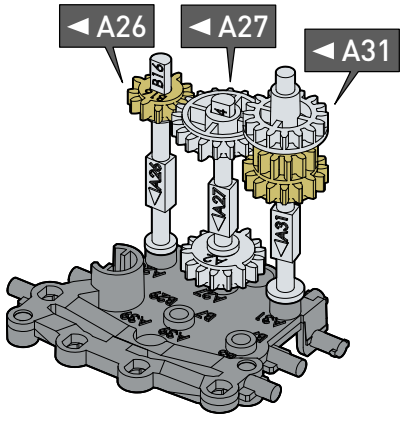



6

Remove all burrs.

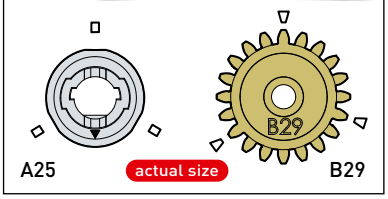

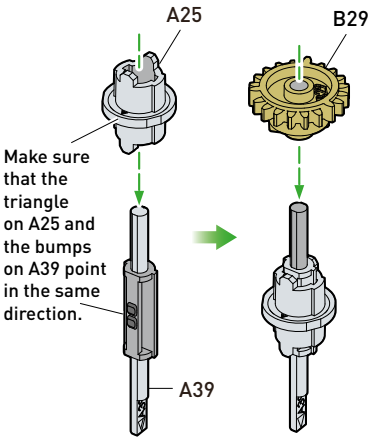

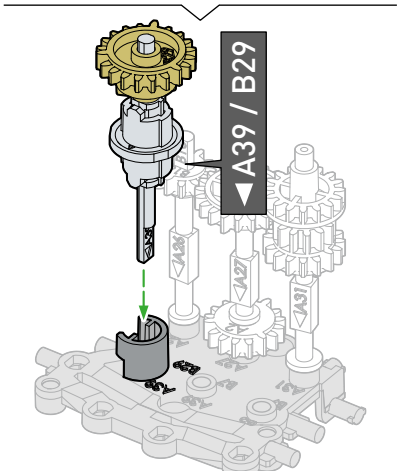

7

Remove all burrs.

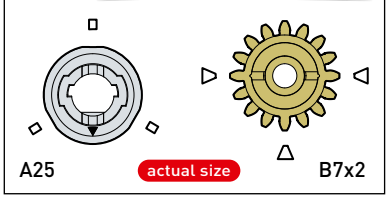

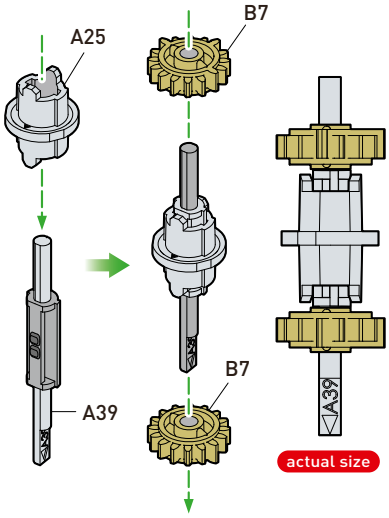

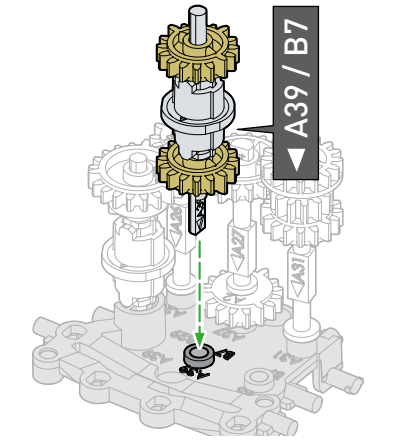

8

Remove all burrs.

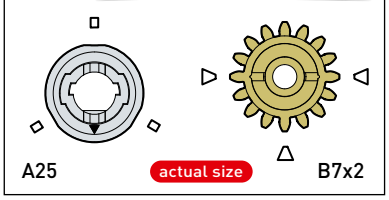

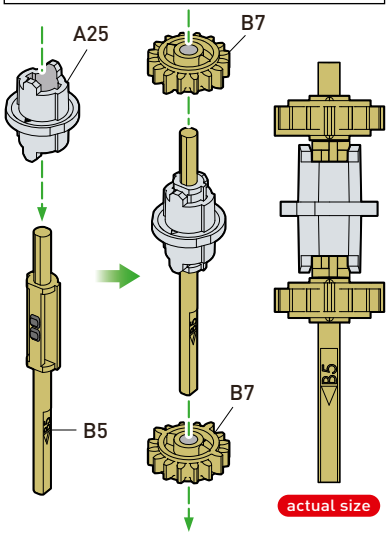

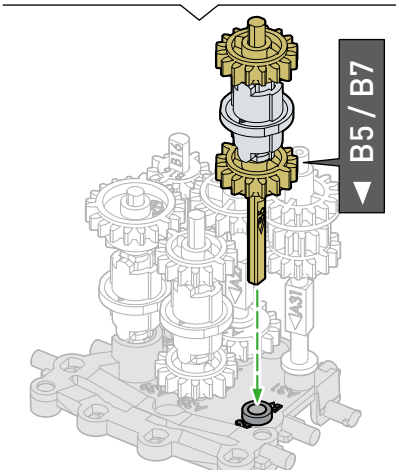

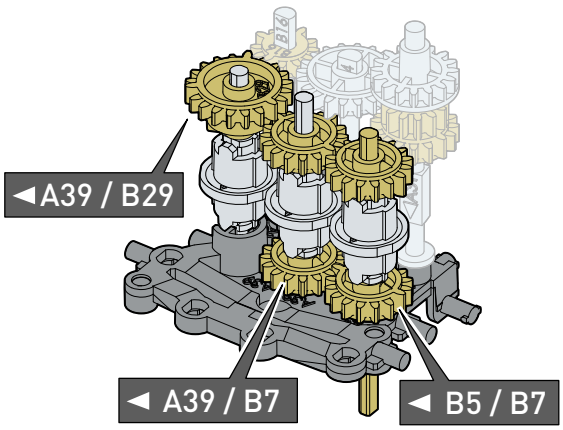

9

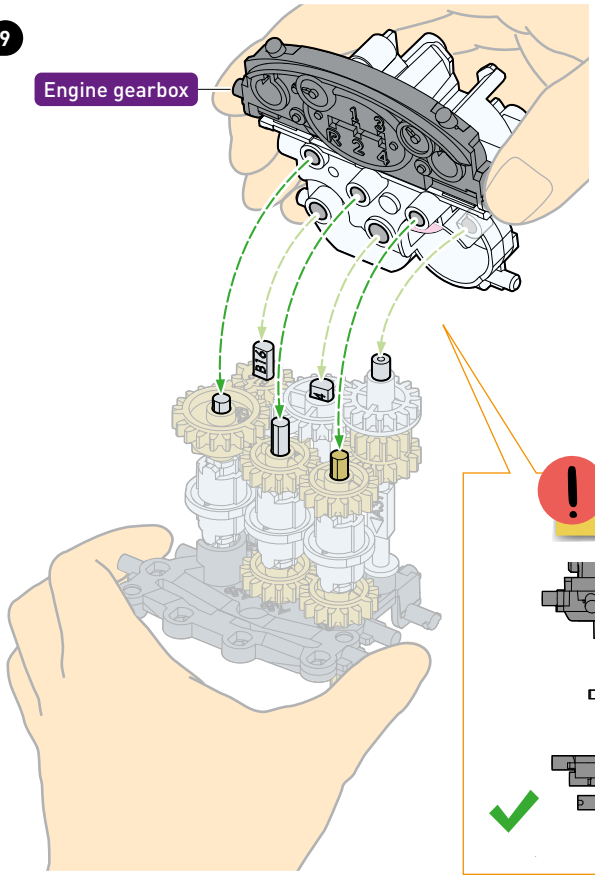

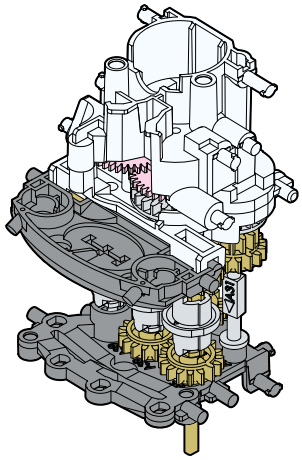

Check that all 6 shafts are inserted into the 6 holes.

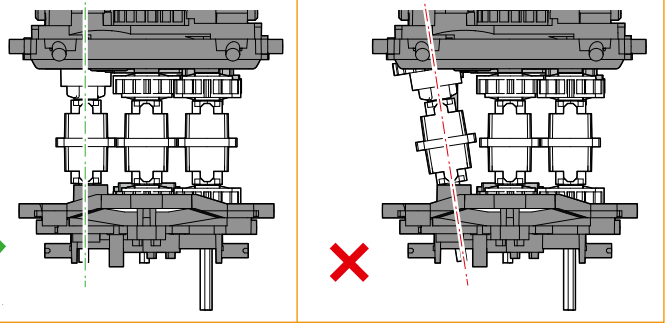

10

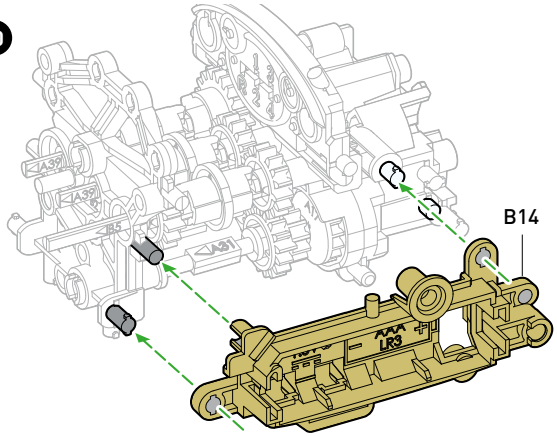

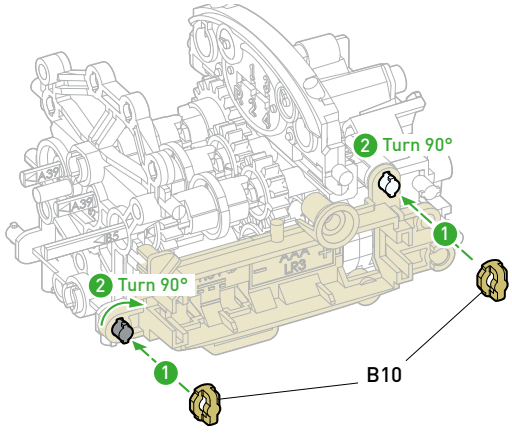

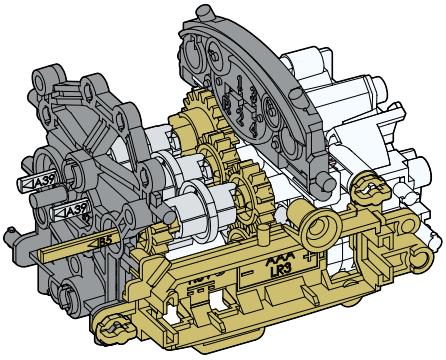



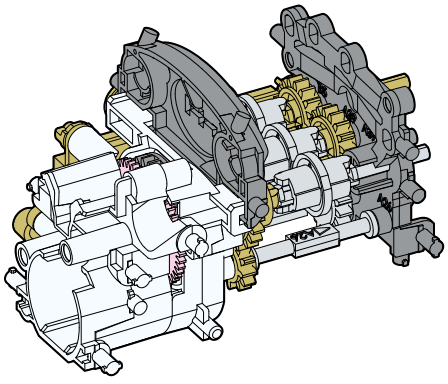

11

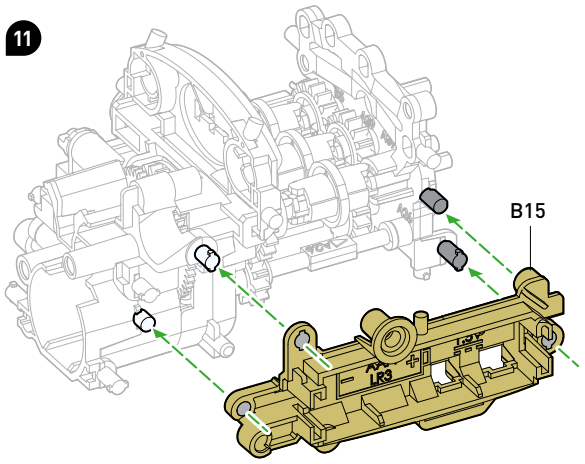

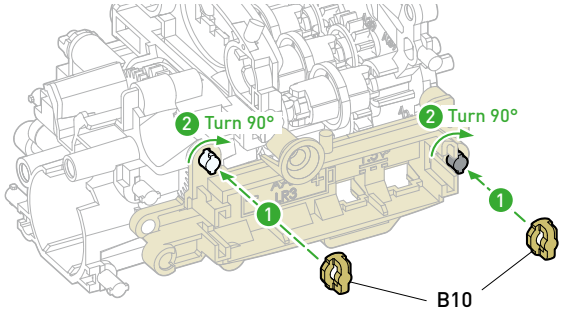

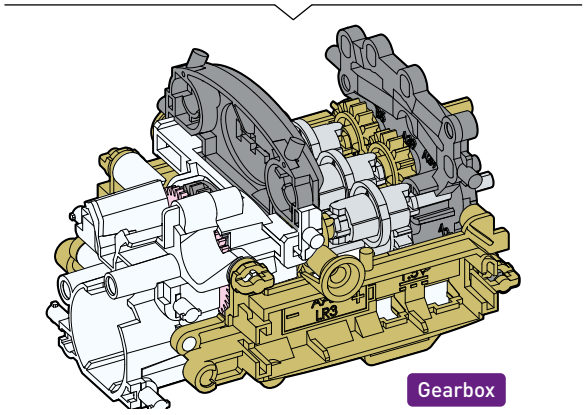

12

Make sure all A25s are in the middle position.

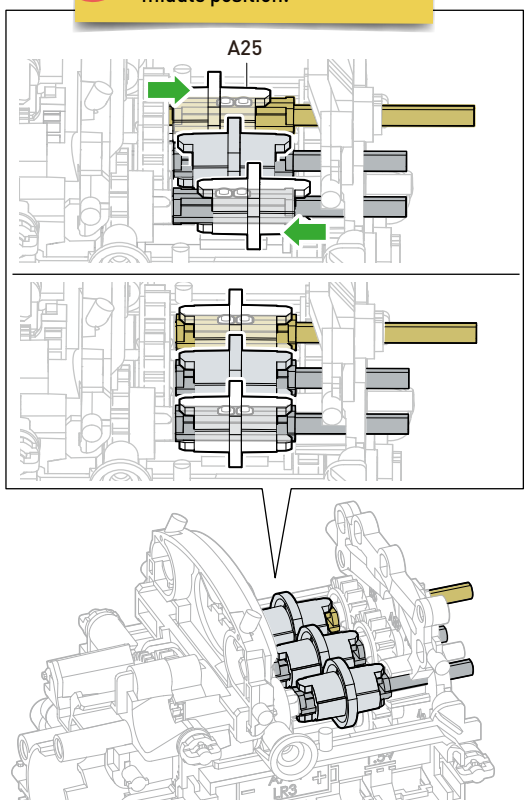

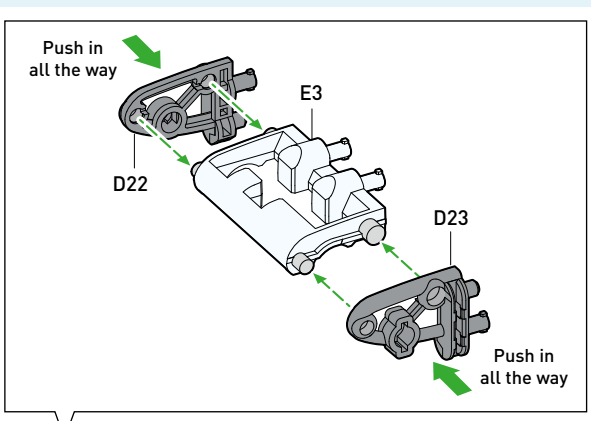

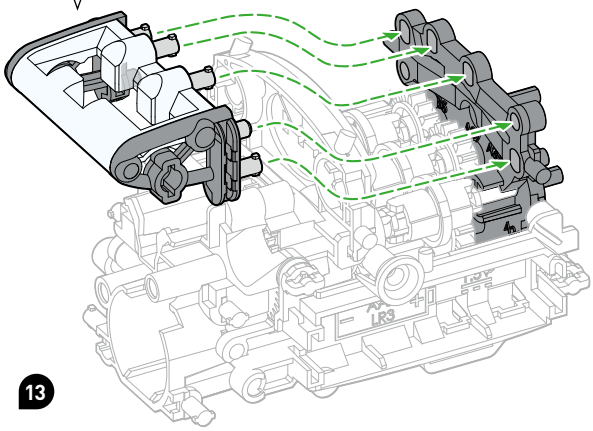

13

Turn the gear with your fingers to make sure it turns smoothly. If it doesn't, return to step 3 on page 5.

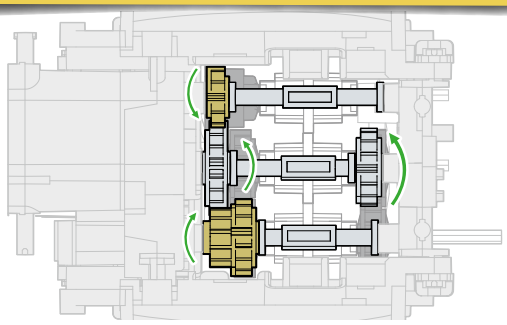

View from below

14

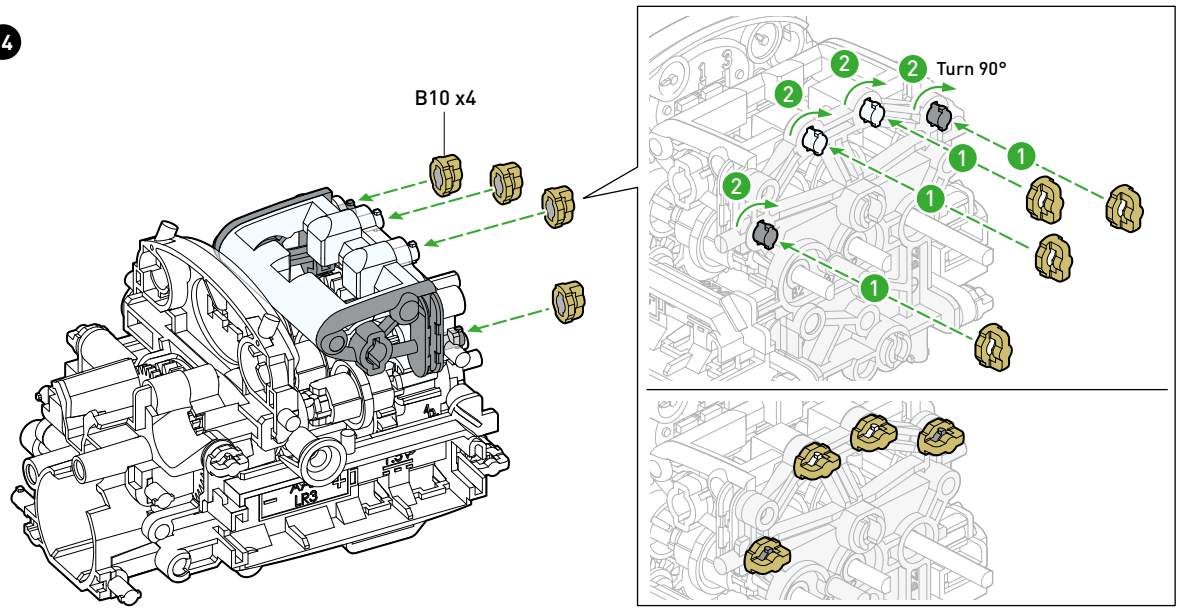

15

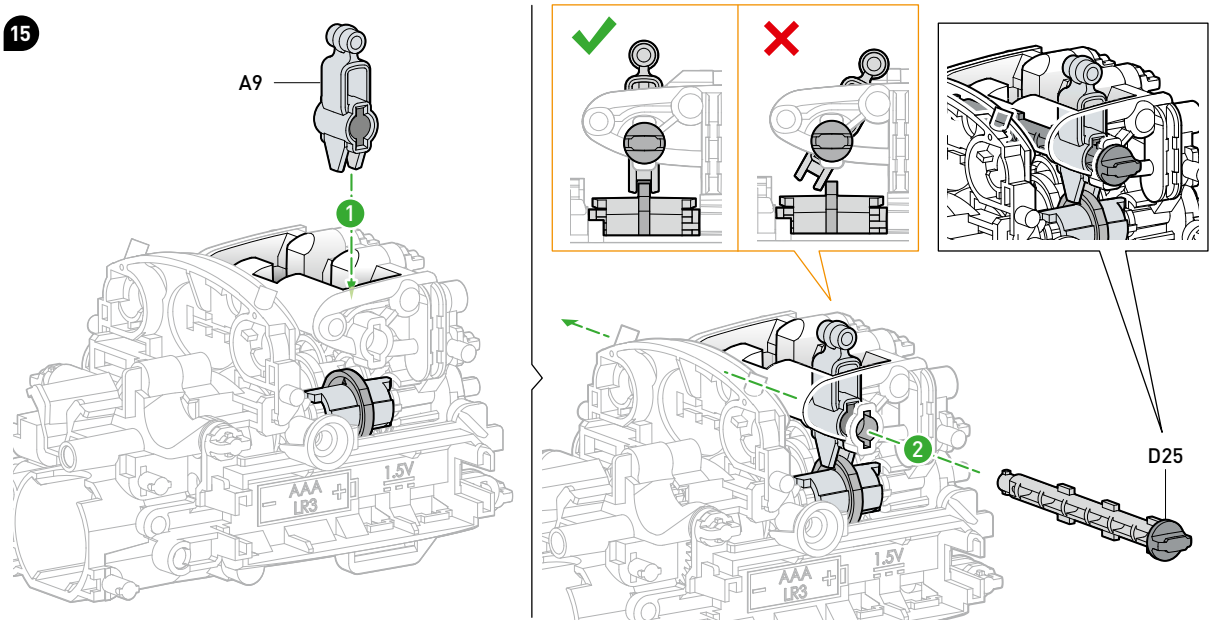

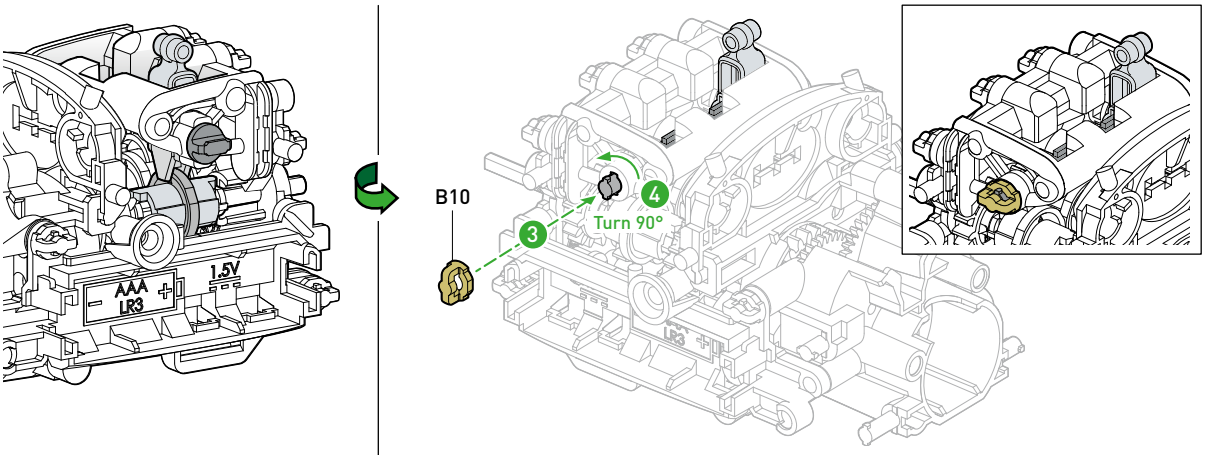

16

Remove all burrs.

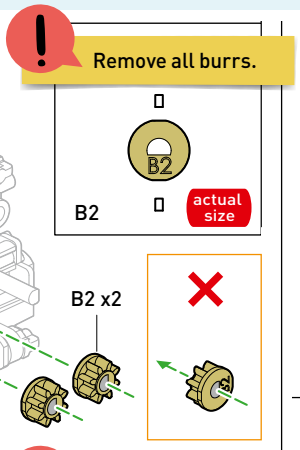

Remove all burrs.

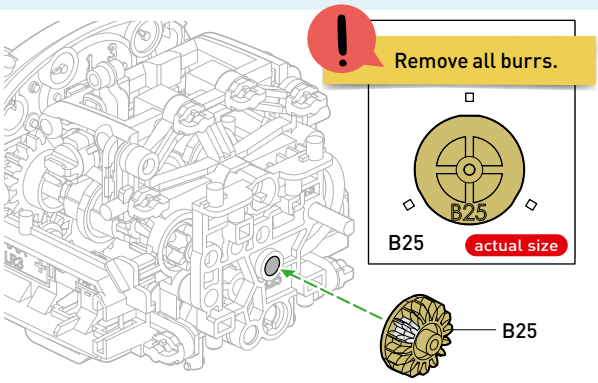

Remove all burrs.

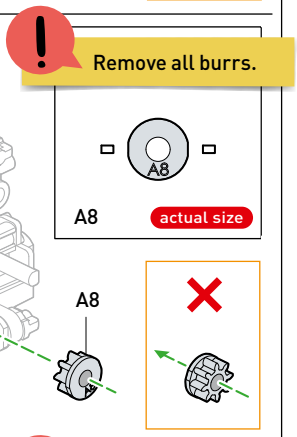

Remove all burrs.

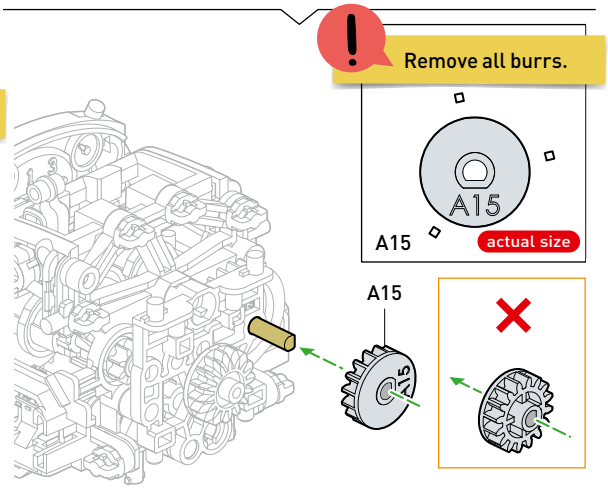

Remove all burrs.

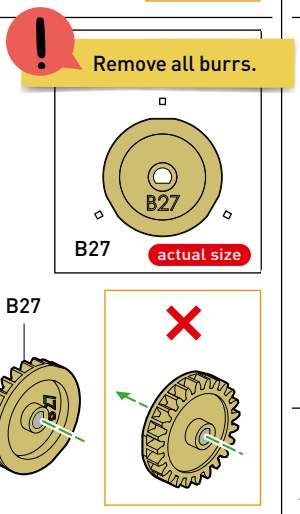

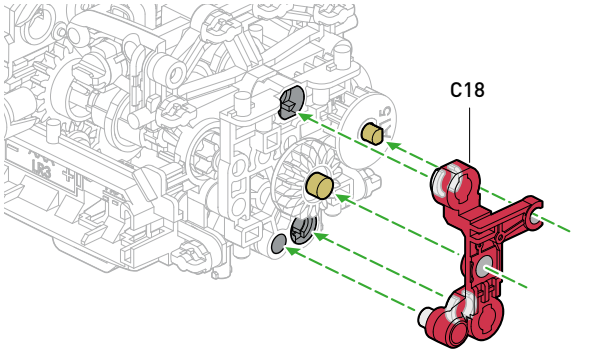

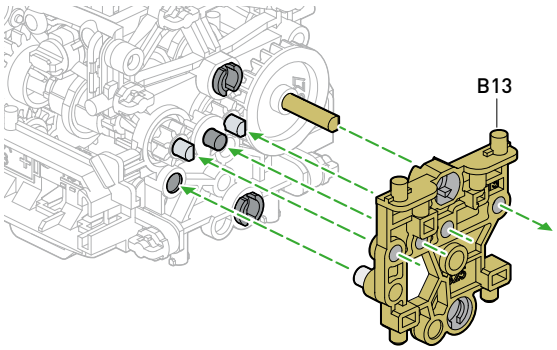

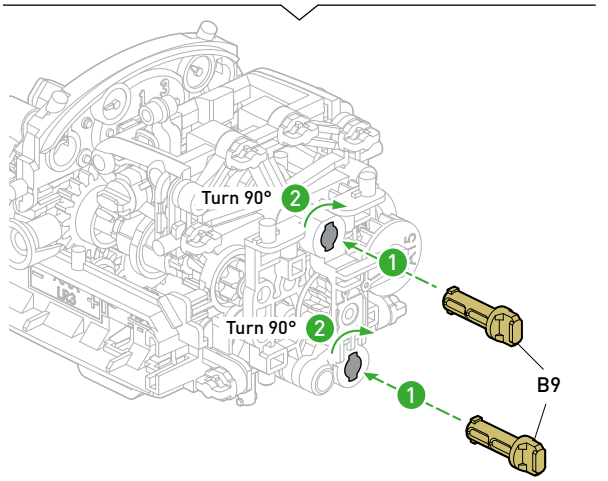

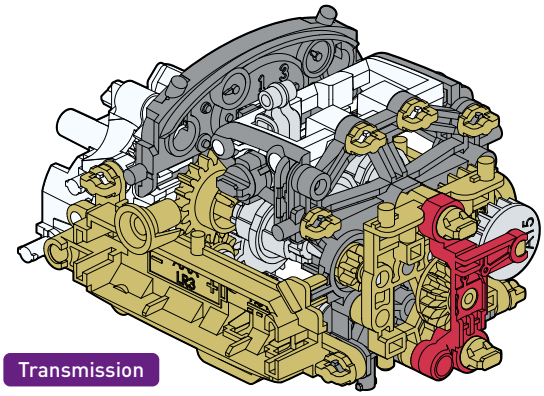

Turn the gear with your fingers to make sure it turns smoothly.

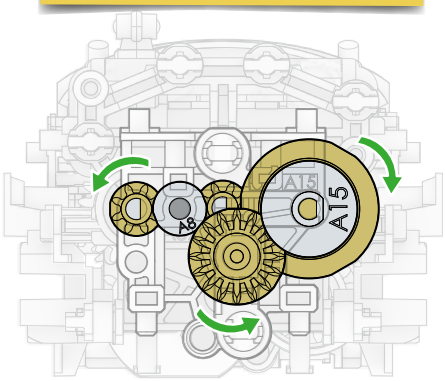

ASSEMBLING THE REAR SUSPENSION

1

Remove all burrs.



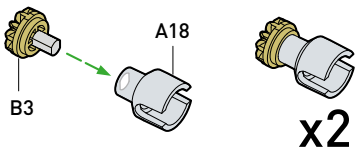

Remove all burrs.

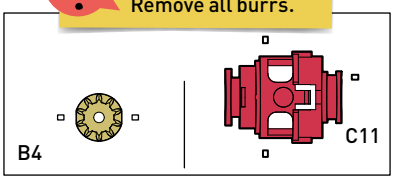

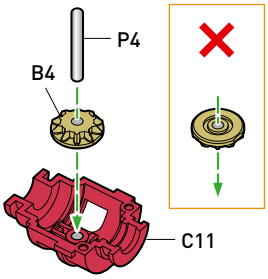

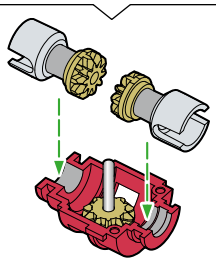

Remove all burrs.

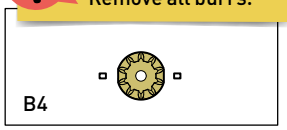

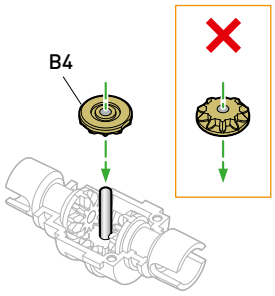

Remove all burrs.

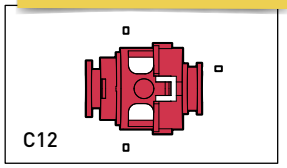

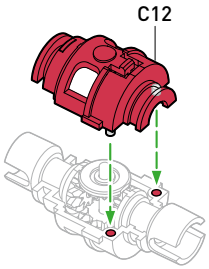

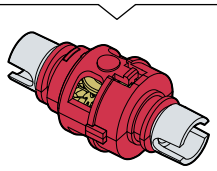

2

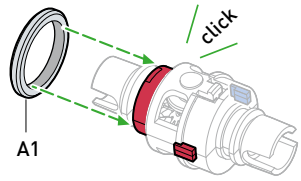

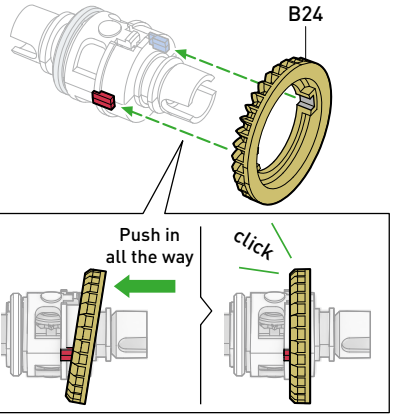

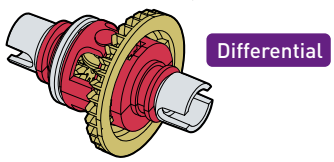

Turn the gear with your fingers to make sure it turns smoothly.

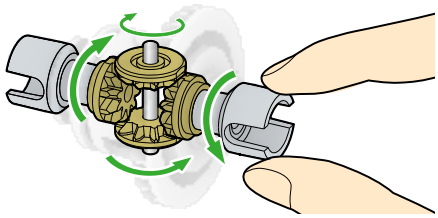

Assembly continues on page 14.

Differential



The differential ensures that a car's drive wheels can rotate at different speeds. This is especially important when turning a corner: The outside wheel has a longer distance to travel and therefore must rotate faster than the inside one.

If both wheels rotated at the same speed, the wheels would skid.

Fun fact: Go-karts don't have differentials and therefore tend to drift around corners.



The differential consists of several gears. The **input bevel gear** (or bevel pinion) transfers the engine power to the **ring gear.** This ring gear is rigidly connected to the **differential housing,** which houses one or more differential bevel gears. These mesh with two opposing **axle gears** connected to the drive wheels.

When driving straight, the two drive wheels rotate at the same speed — the differential bevel gears do not rotate on their own axes, but are simply carried along by the differential housing. When cornering, however, the outer wheel begins to rotate faster than the inner wheel. To compensate for this difference, the differential bevel gears also rotate on their own axes, thus equalizing the speed difference between the two wheels.

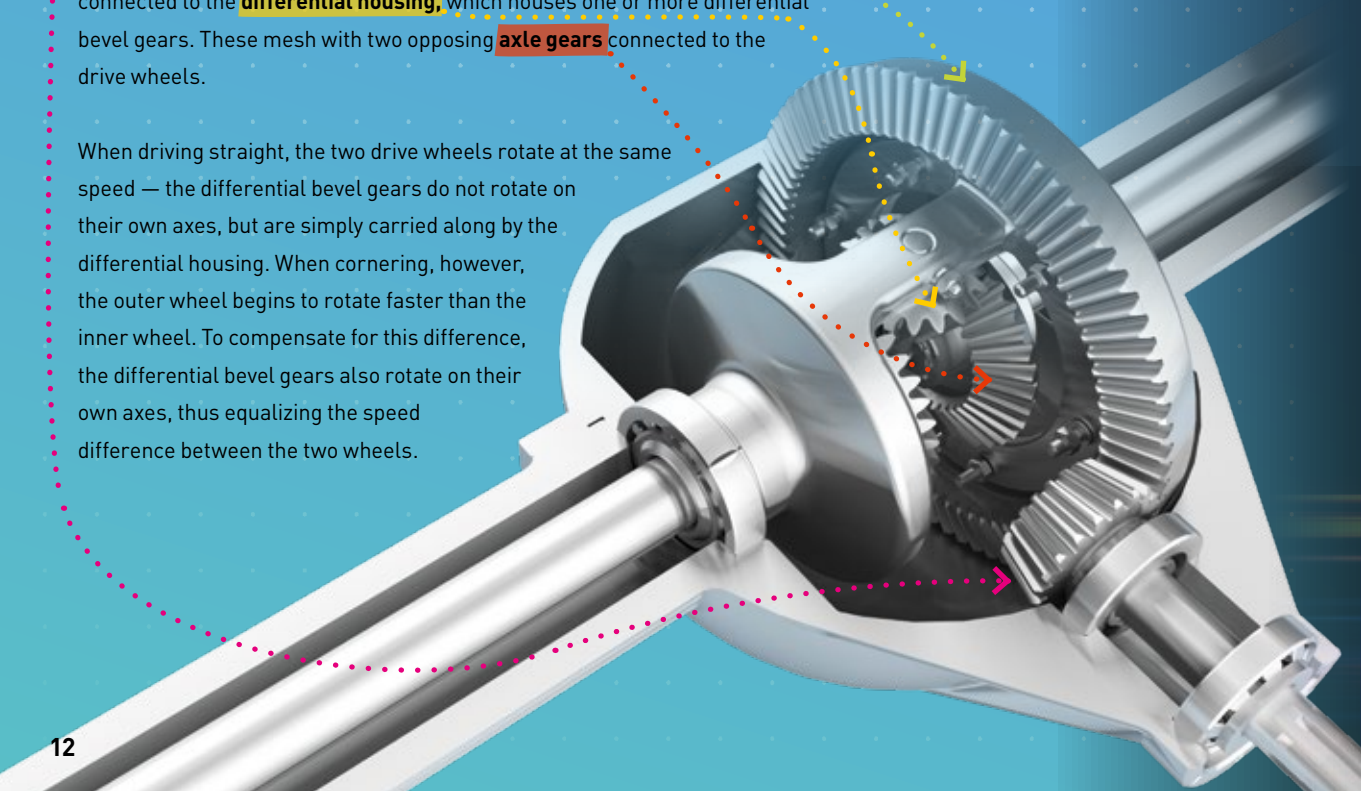

What is a Transmission?

A transmission is a mechanical device consisting of gears or other components used to transmit, change, or control movement and power.



Manual transmission

A manual transmission consists of several gears of different sizes that are combined depending on the gear. This changes the **gear ratio,** which indicates how many times the drive gear must rotate in order to rotate the output gear once.

If both gears are the same size, the gear ratio is 1:1. If the drive gear is twice as large as the driven gear, the gear ratio is 1:2. This means that the output gear rotates twice before the drive gear has rotated once. If the output gear is twice as large as the drive gear, the gear ratio is 2:1. This means that the output gear only rotates halfway when the drive gear has rotated completely once.

Small gears (with fewer teeth) rotate faster but transmit less power. Larger gears (with more teeth) rotate slower but can transmit more power.

When starting off, the vehicle needs a lot of power to move from a standstill. Therefore, a low gear is selected that uses a high gear ratio — meaning the driven gear is larger than the driving gear.

At higher speeds, less power is required, but the wheels should rotate faster. The driver shifts the car into higher gear, using smaller gears and a lower gear ratio.

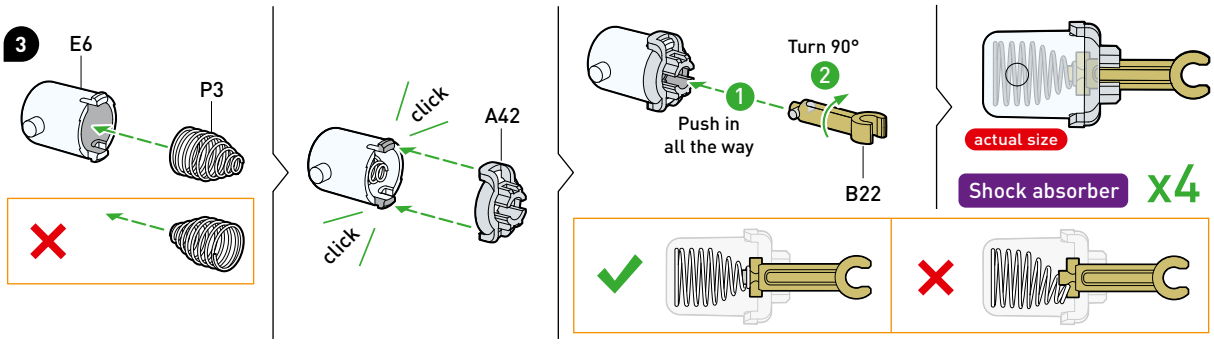
3
E6
P3
click
A42
click
Turn 90°
Push in
all the way
B22
actual size
Shock absorber
x4

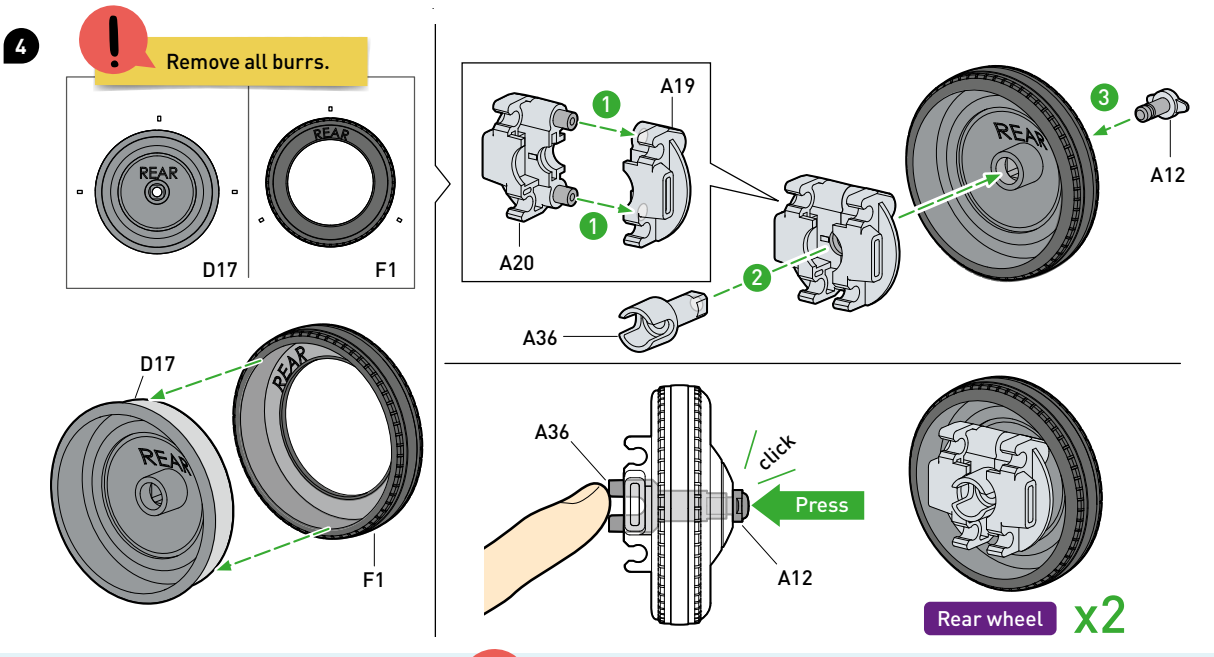
4
Remove all burrs.
REAR
D17
F1
A19
A20
A36
A12
Press
click
Rear wheel
x2

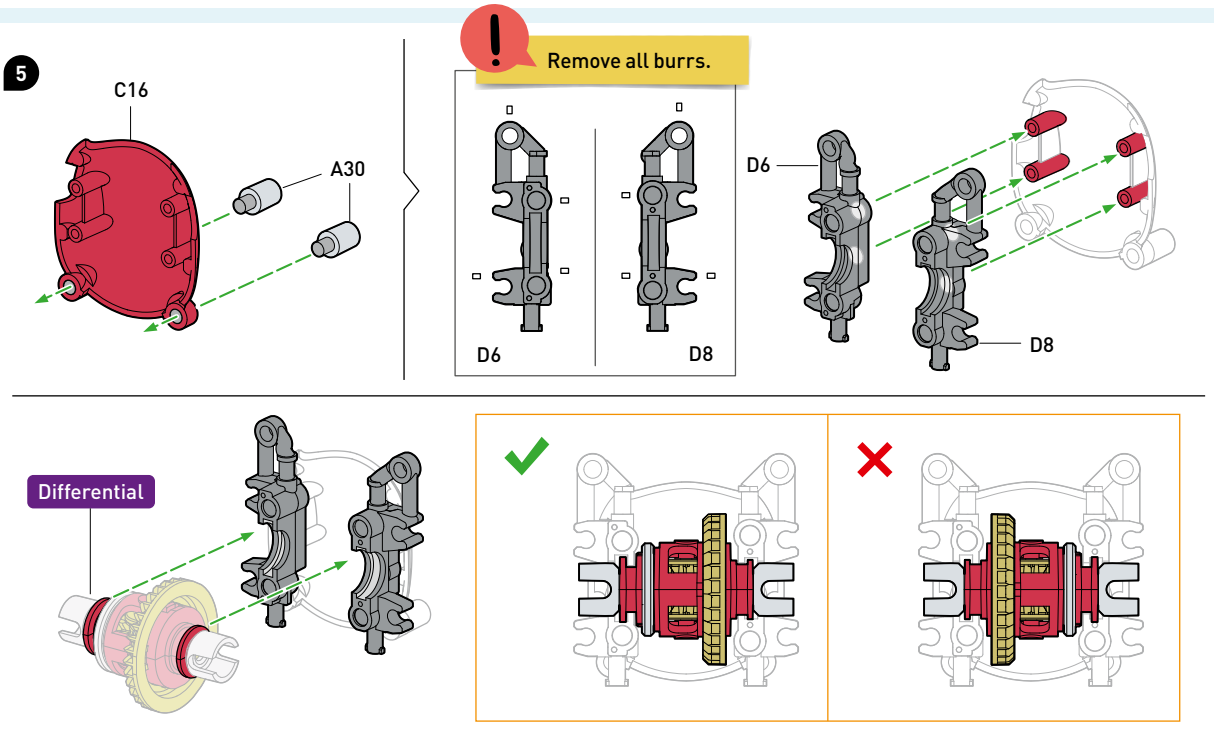
5
C16
A30
Remove all burrs.
D6
D8
Differential

6

Remove all burrs.

Shock absorber

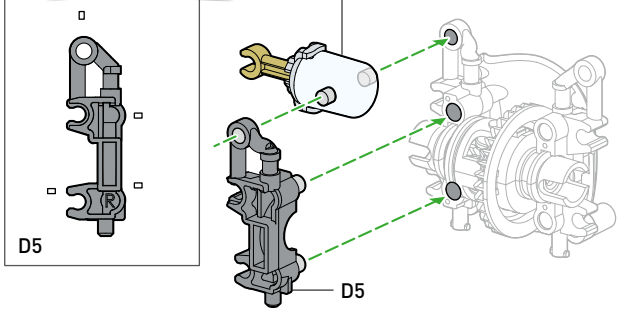

Remove all burrs.

Shock absorber

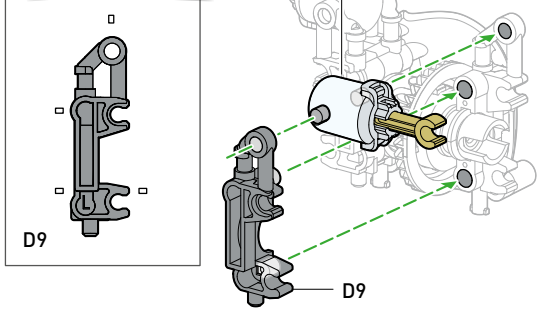

7

Remove all burrs.

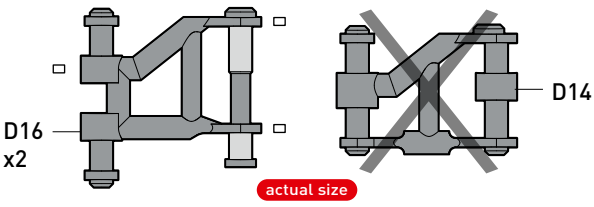

actual size

Do not confuse D16 and D14.

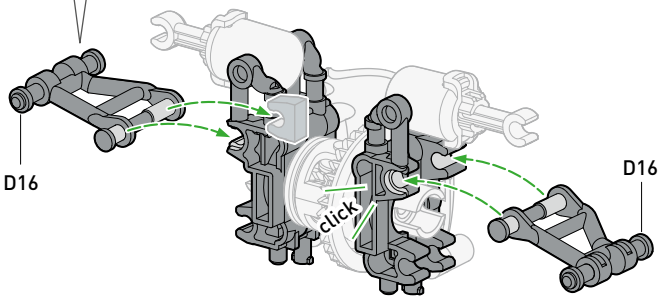

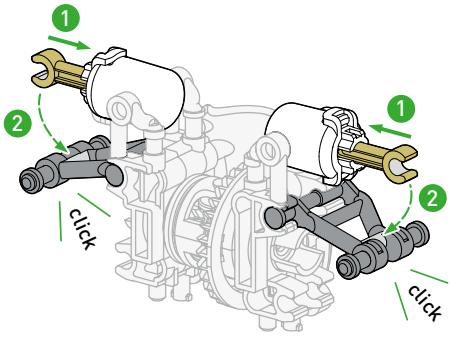

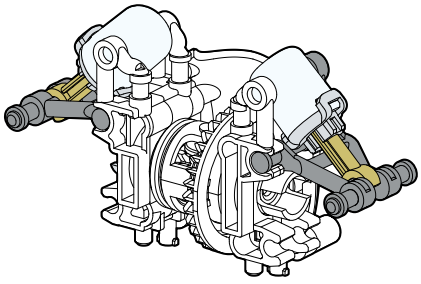

8

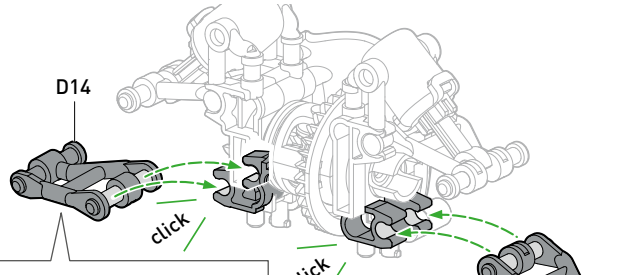

D14 x2

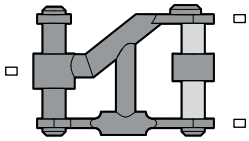

actual size

Remove all burrs.

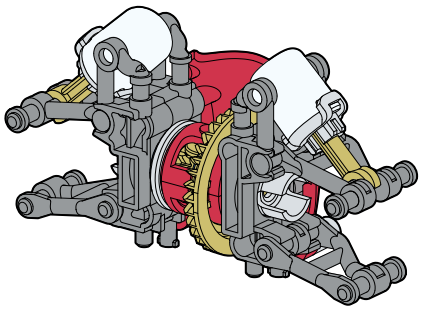



9

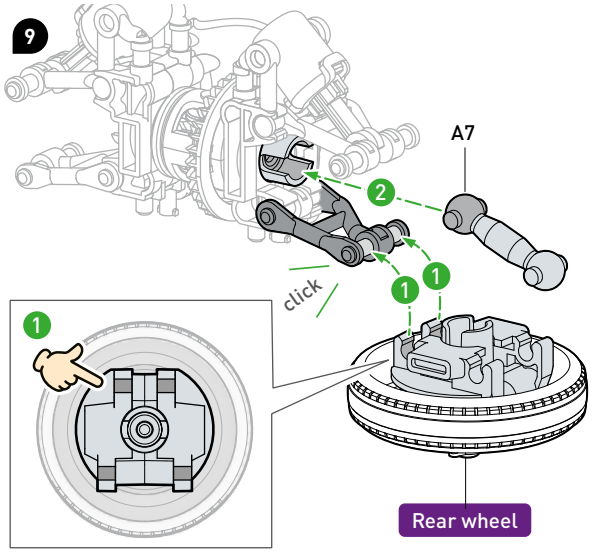

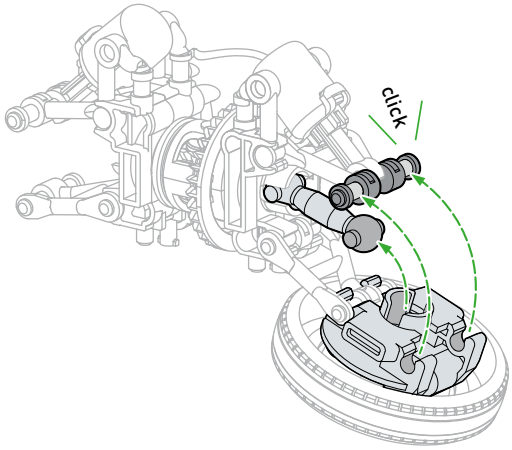

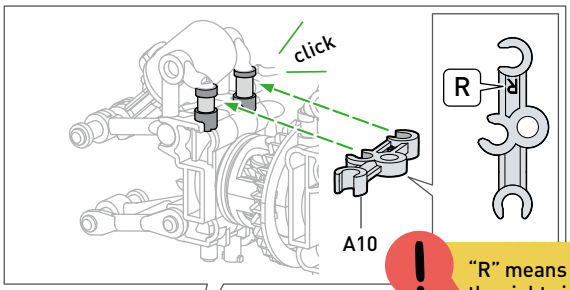

"R" means the right side.

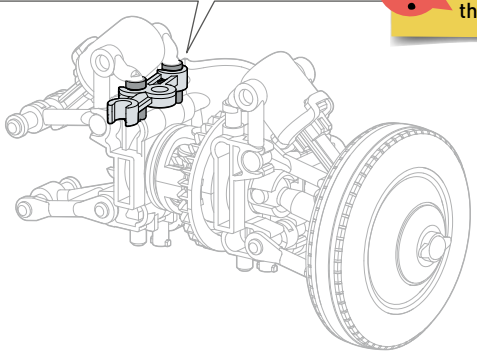

10

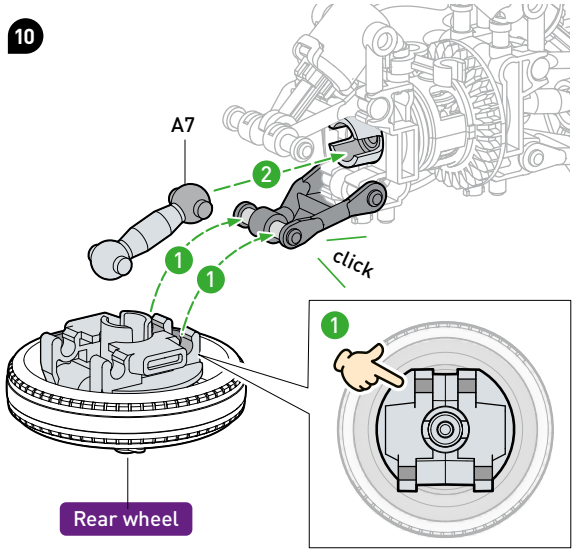

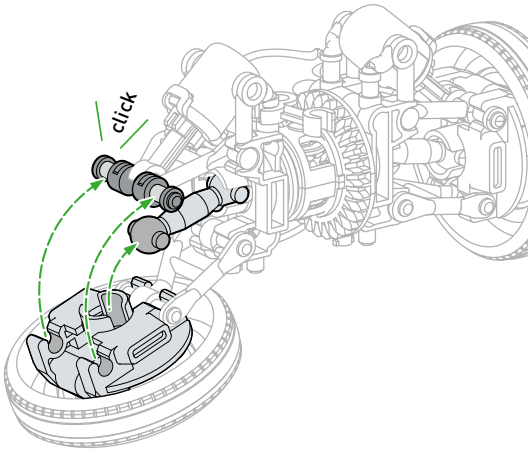

"L" means the left side.

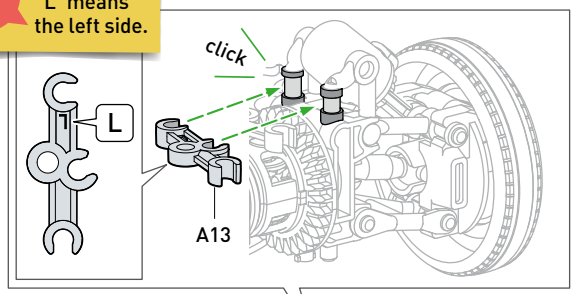

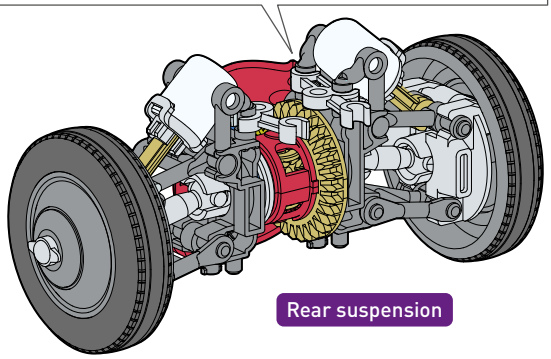

Rear suspension

ASSEMBLING THE FRONT SUSPENSION

1

Remove all burrs.

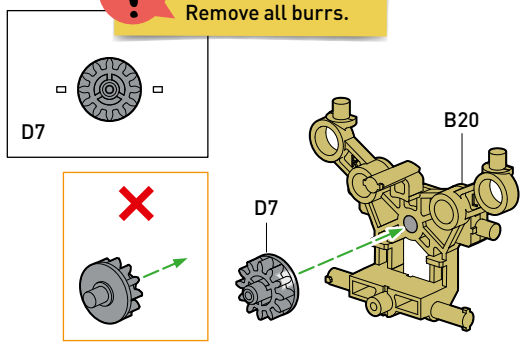

2

Remove all burrs.

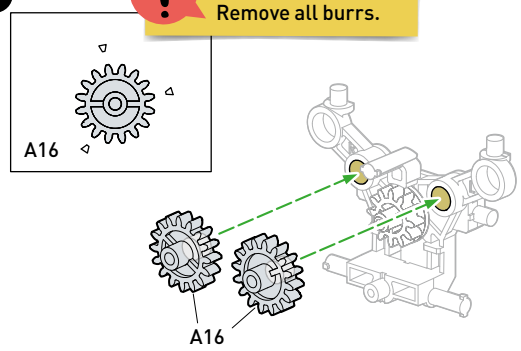

3

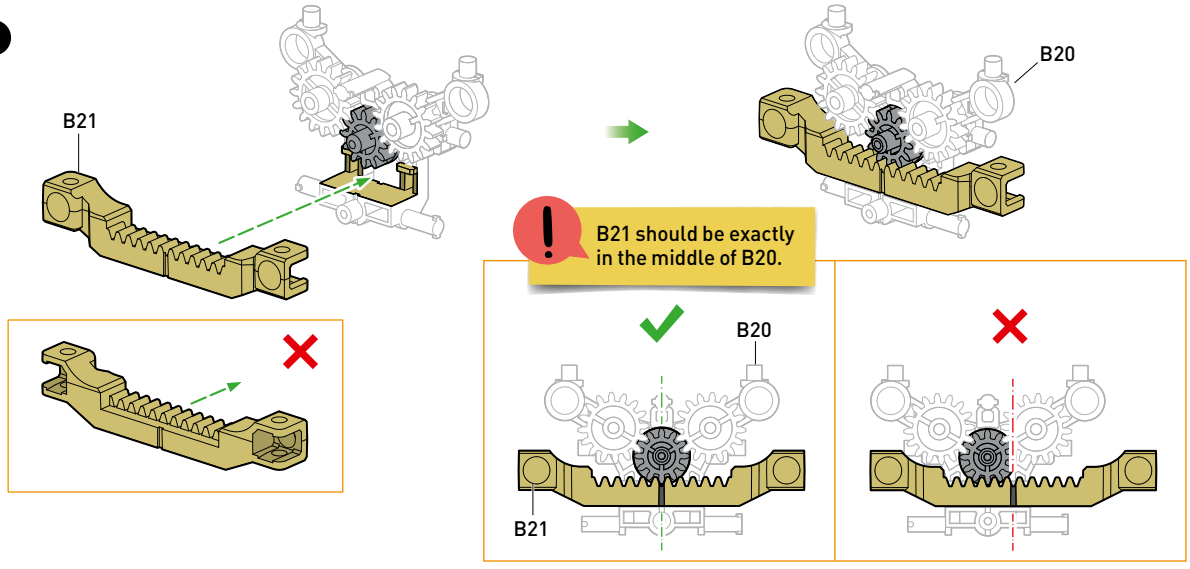

4

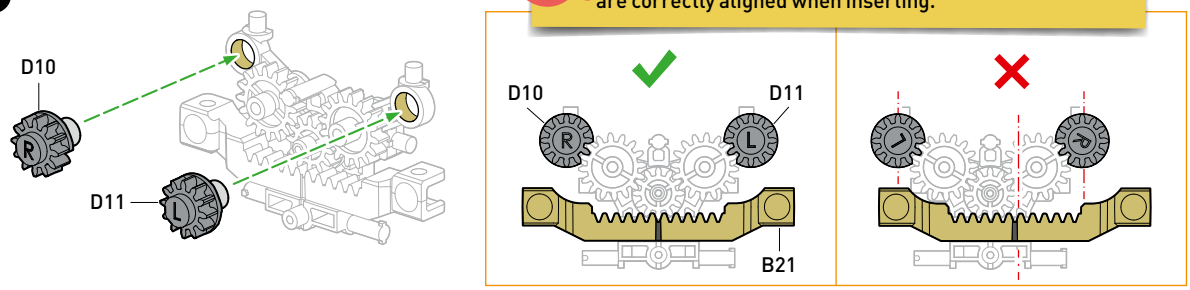

5

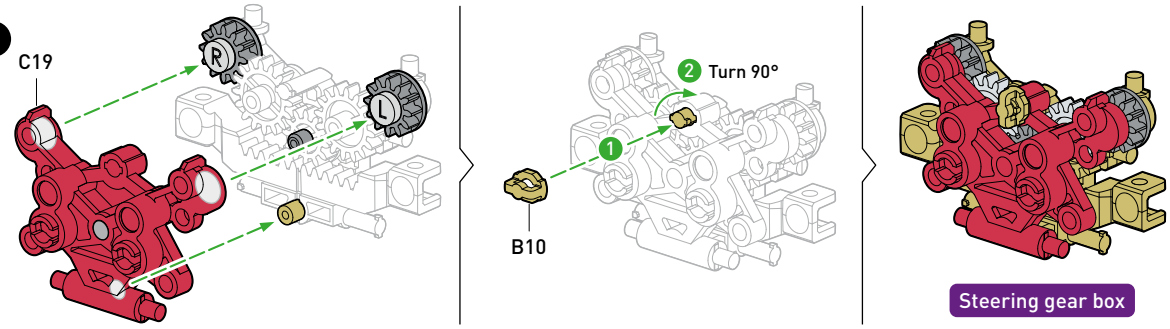

Remove all burrs.

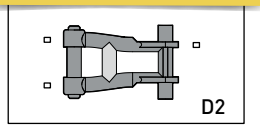

6

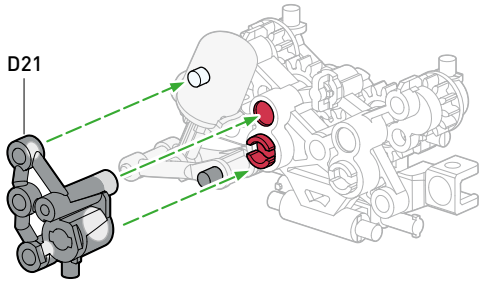

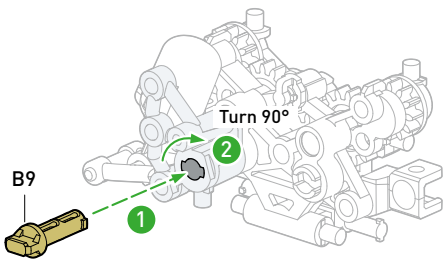

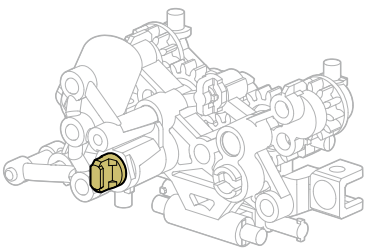

Remove all burrs.

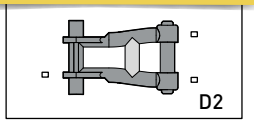

7

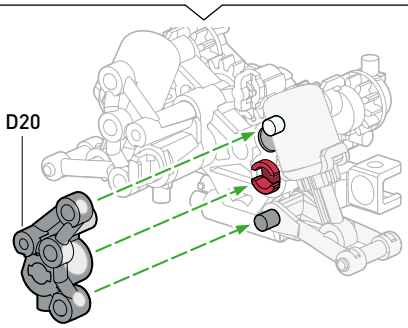

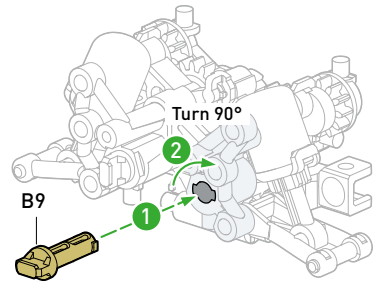

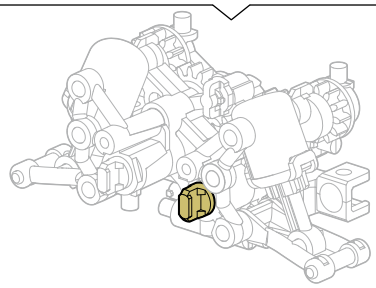

8

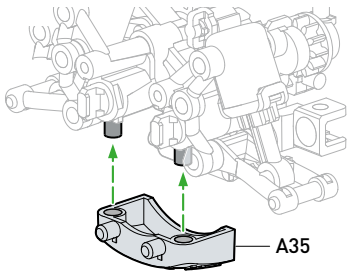

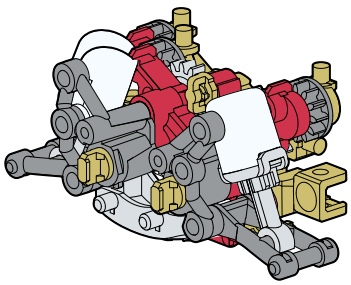

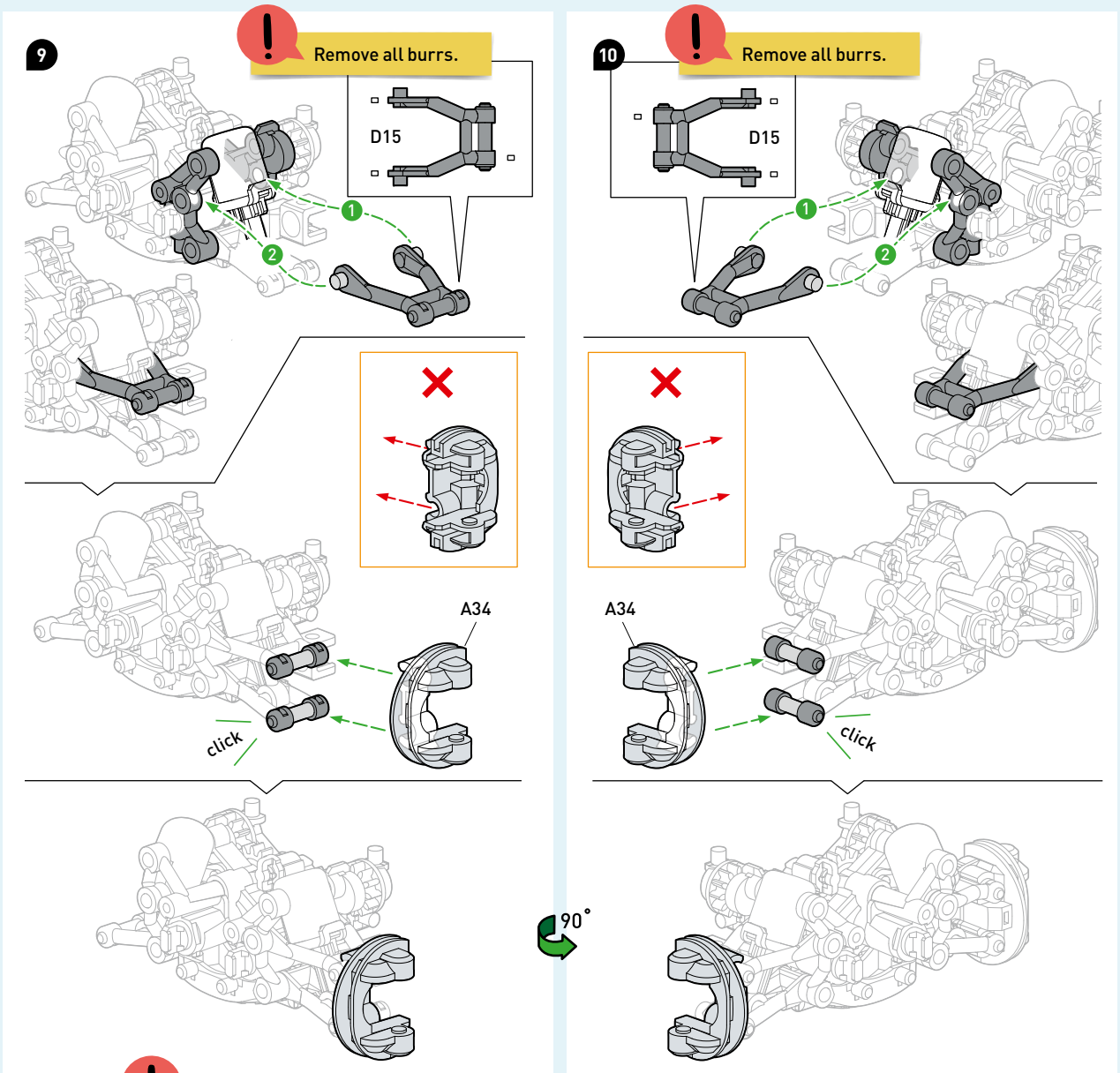
9
Remove all burrs.
D15
1
2
A34
click
10
Remove all burrs.
D15
1
2
A34
click
90°

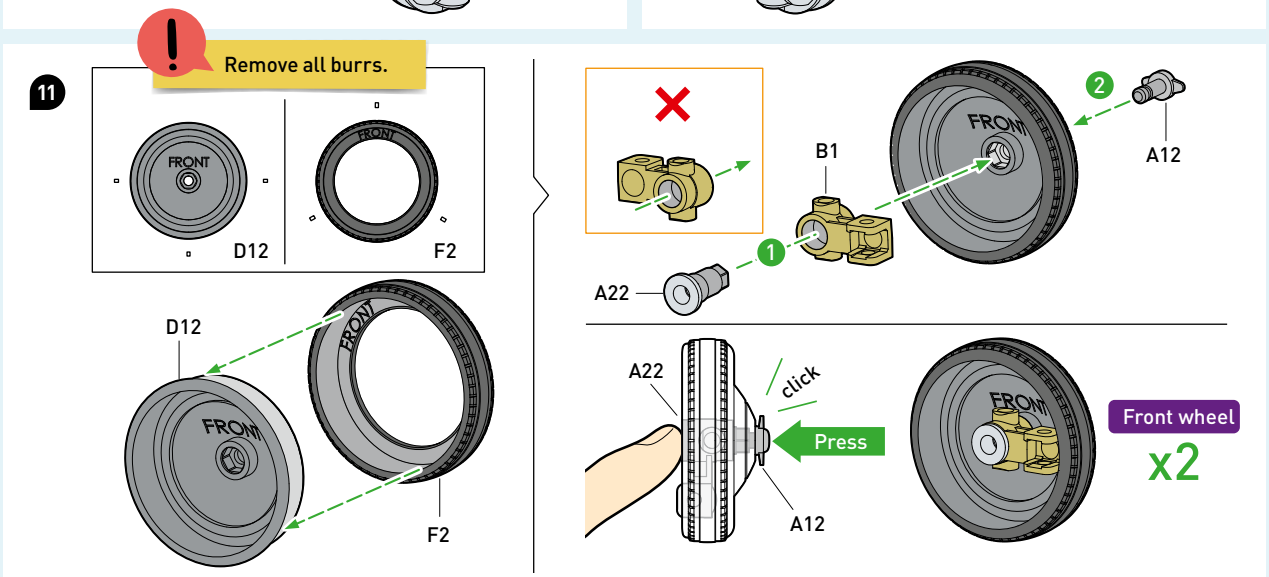
11
Remove all burrs.
FRONT
D12
FRONT
F2
D12
FRONT
FRONT
F2
B1
2
A12
1
A22
A22
click
Press
A12
FRONT
Front wheel
x2



12

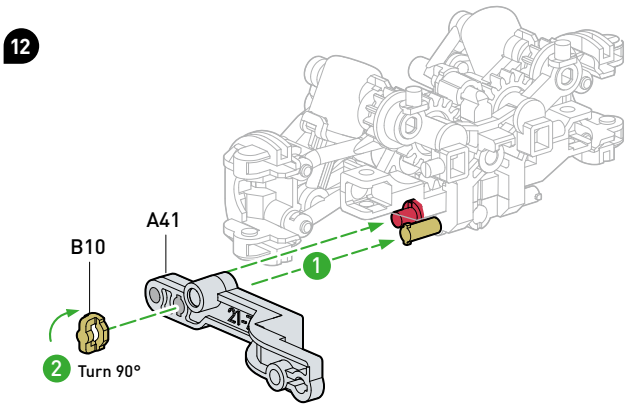

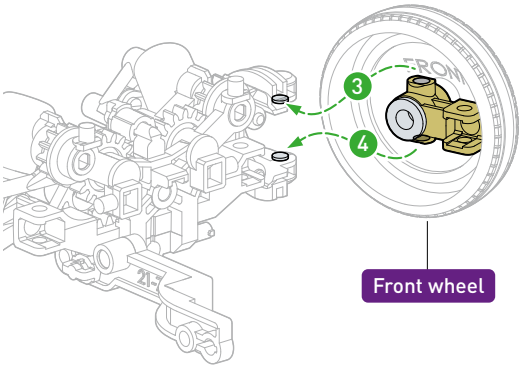

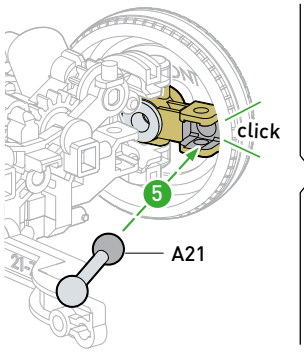

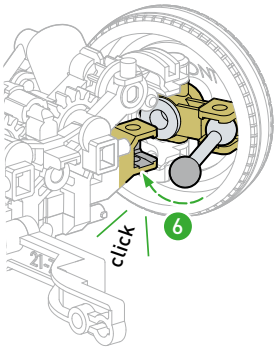

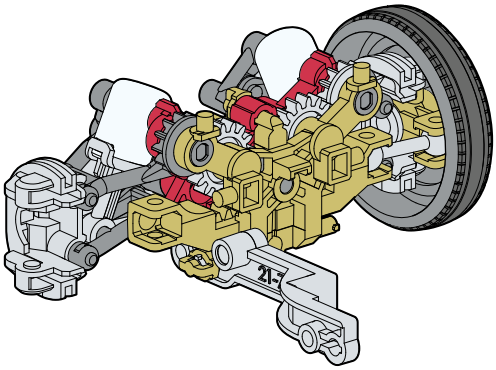

13

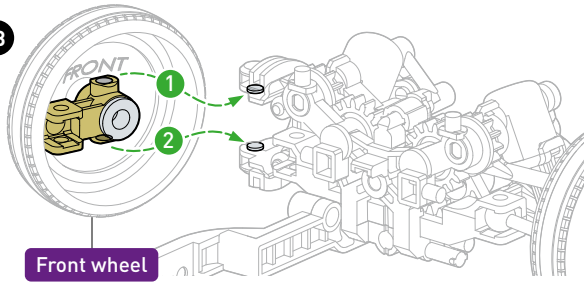

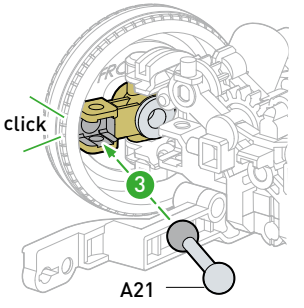

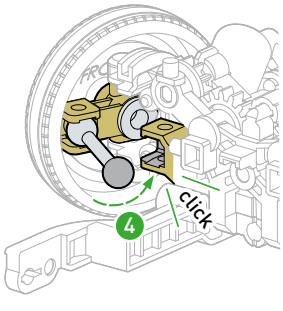

Move the front wheels left and right.
The steering should feel smooth.

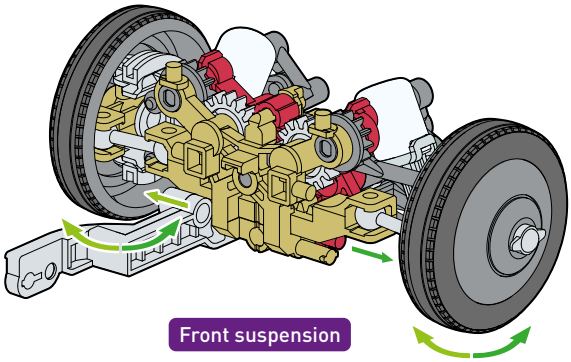

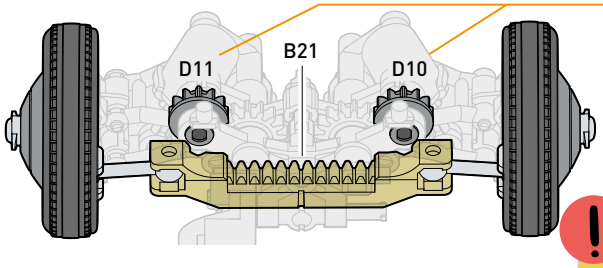

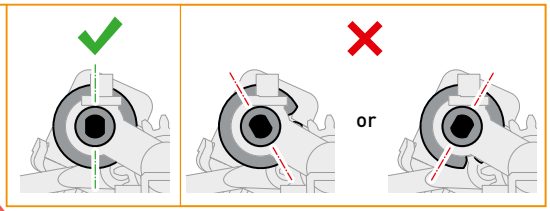

When B21 is centered (front wheels pointing straight ahead), the oval holes in D10 and D11 should also be straight.

ASSEMBLING THE V8 ENGINE

1

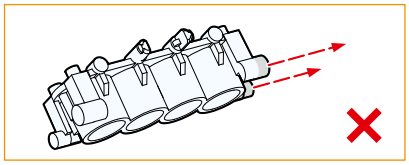

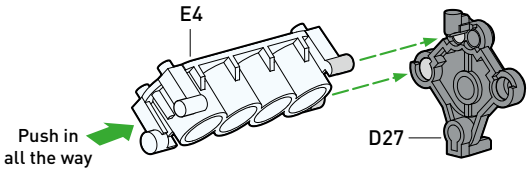

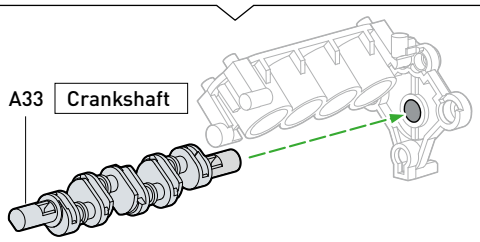

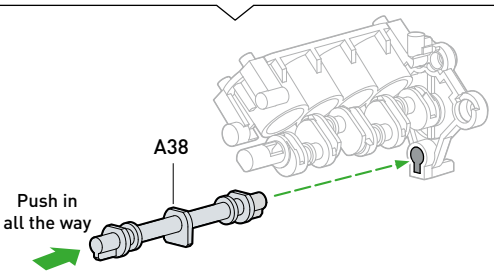

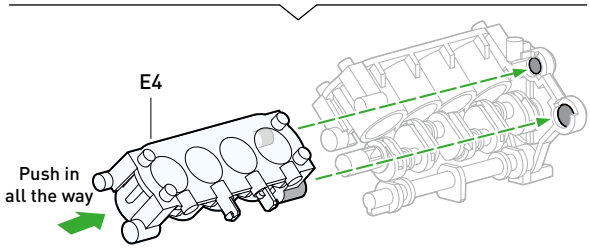

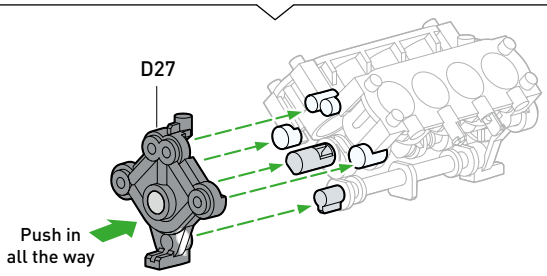

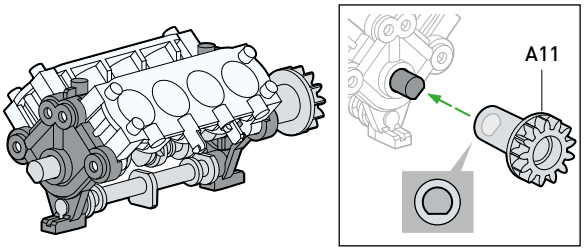

2

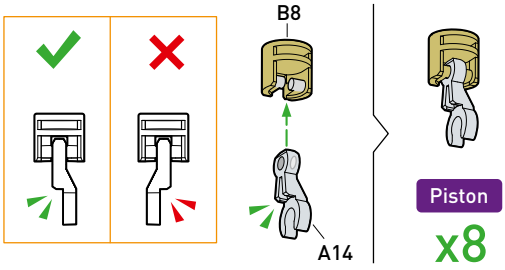

3

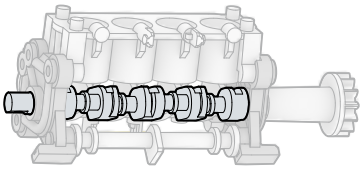

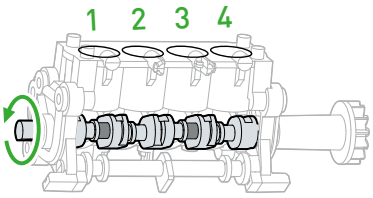

Turn the crankshaft (A33) so that the marked points point to cylinders 1 and 3.

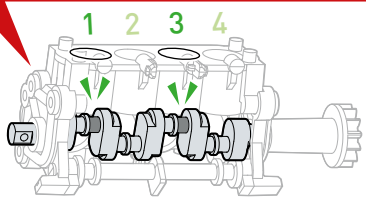

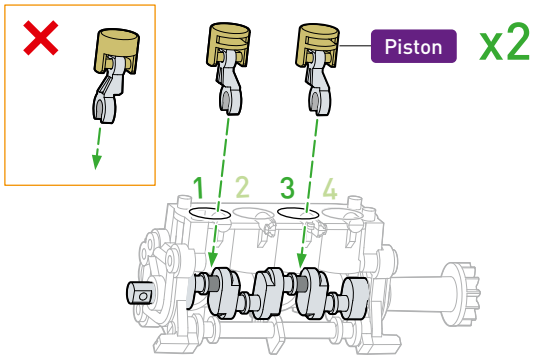

Push the pistons through cylinders 1 and 3 to connect them to the crankshaft.

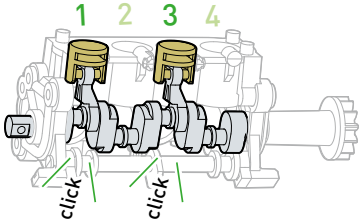

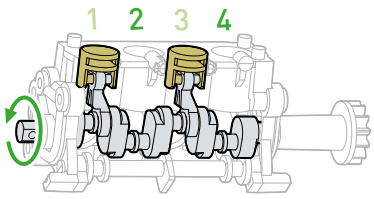

Turn the crankshaft (A33) so that the marked points point to cylinders 2 and 4.

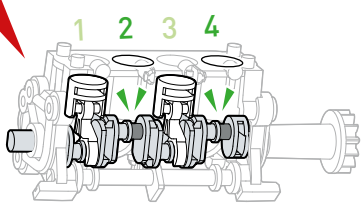

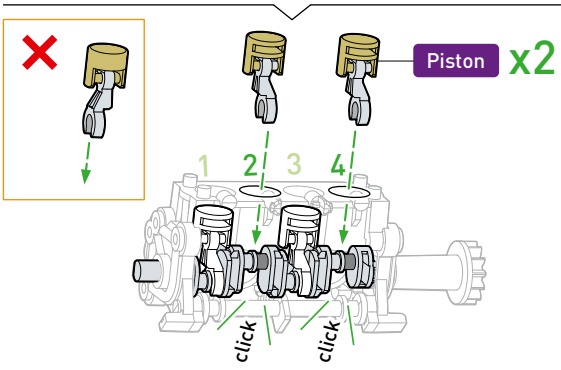

Push the pistons through cylinders 2 and 4 to connect them to the crankshaft.

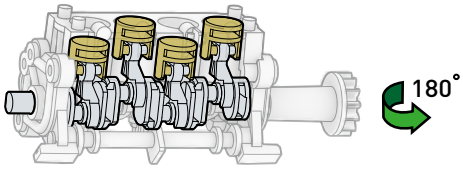

4

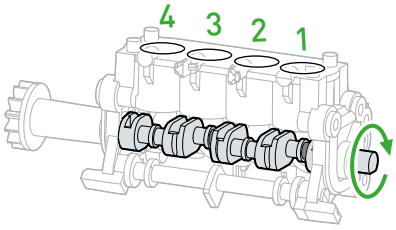

Turn the crankshaft (A33) so that the marked points point to cylinders 1 and 3.

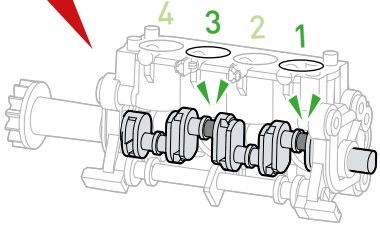

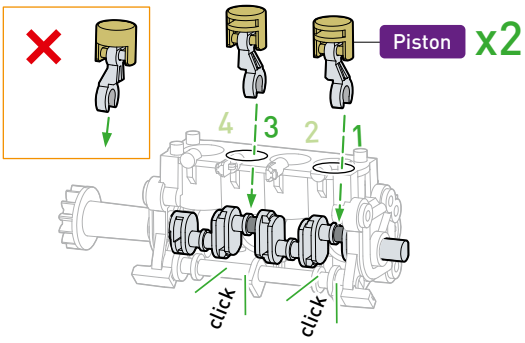

Push the pistons through cylinders 1 and 3 to connect them to the crankshaft.

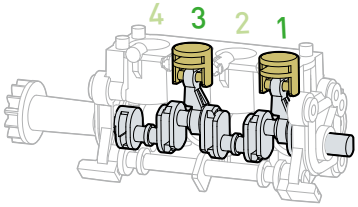

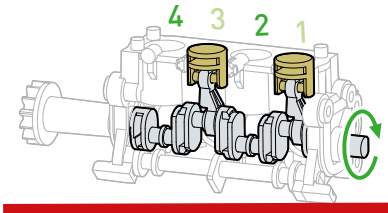

Turn the crankshaft (A33) so that the marked points point to cylinders 2 and 4.

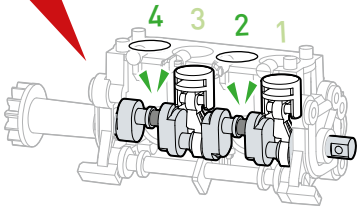

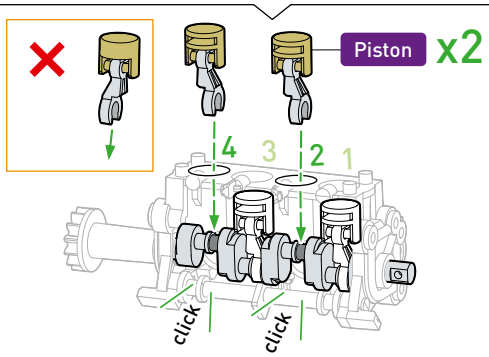

Push the pistons through cylinders 2 and 4 to connect them to the crankshaft.

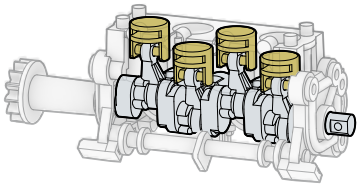

5

DO NOT cut through A28.

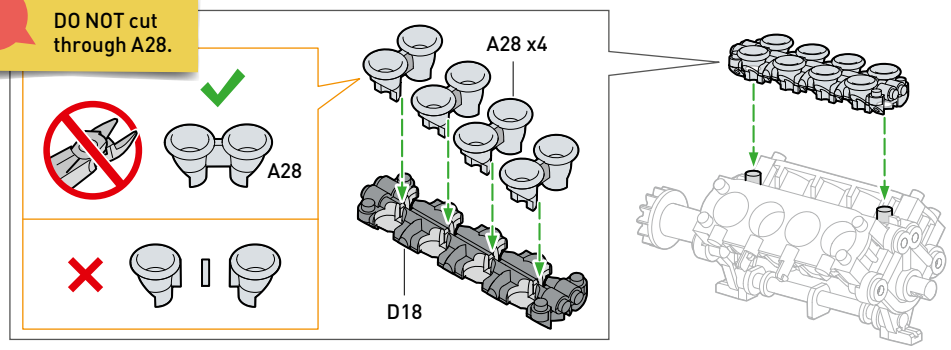

6

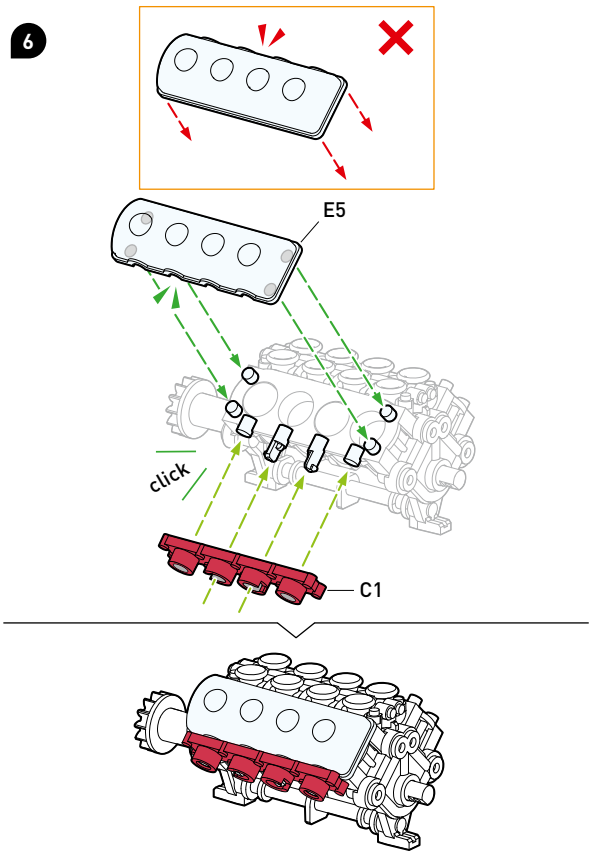

7

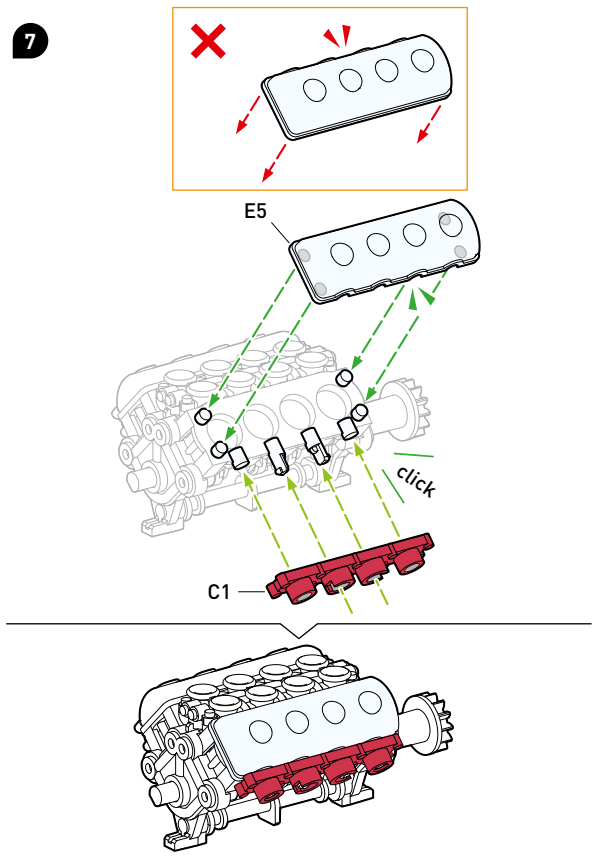

8

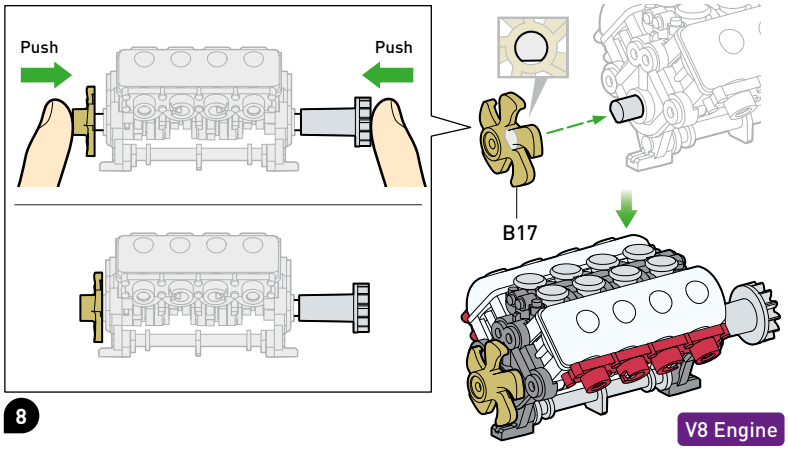

Turn A11 and make sure all pistons move up and down smoothly.

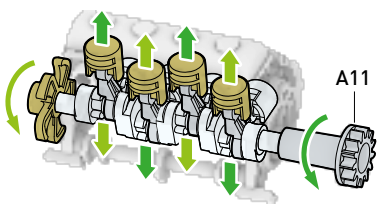

ASSEMBLING THE STEERING COLUMN

The steering column connects the steering wheel to the steering gear. Left-hand drive cars are those in which the steering wheel is located on the left side of the vehicle, which is common in countries with right-hand traffic, such as the USA. A left-hand drive car is designed for driving on the right side of the road. Left-hand traffic is common in Great Britain, for example. The steering wheel is attached to part B28 of the steering column on page 34, and you can decide then for yourself whether you want to build a left- or right-hand drive vehicle.

1

Remove all burrs.

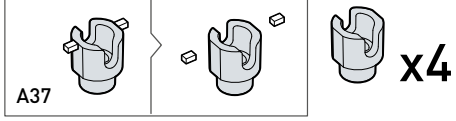

2

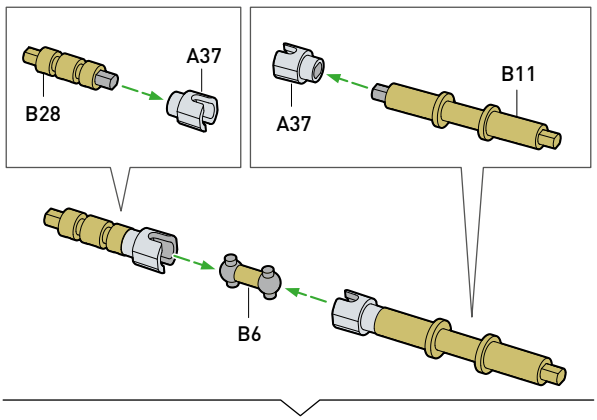

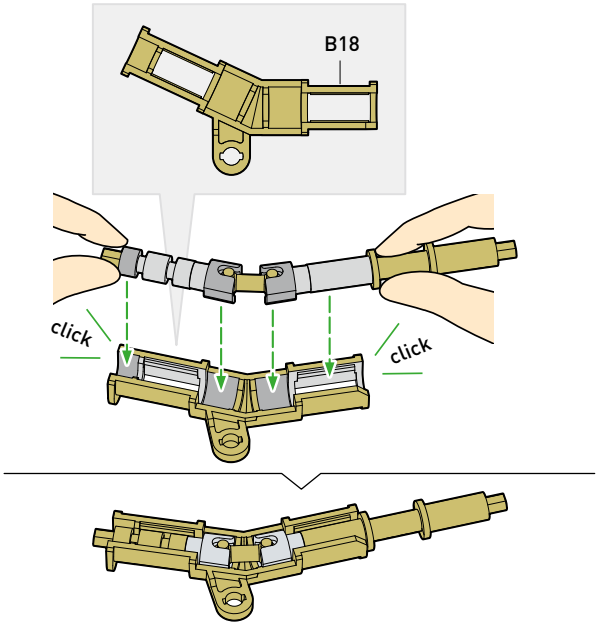

Steering column for right-hand drive

3

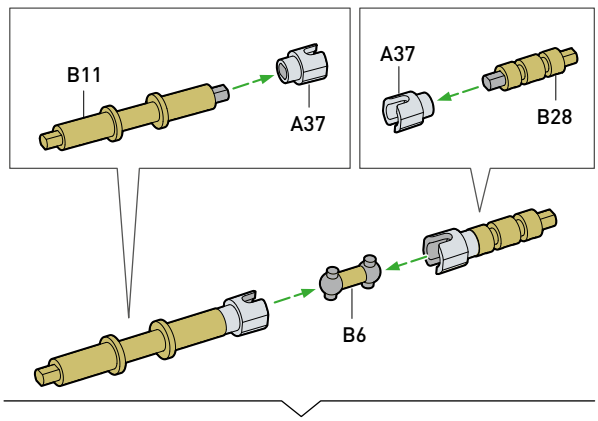

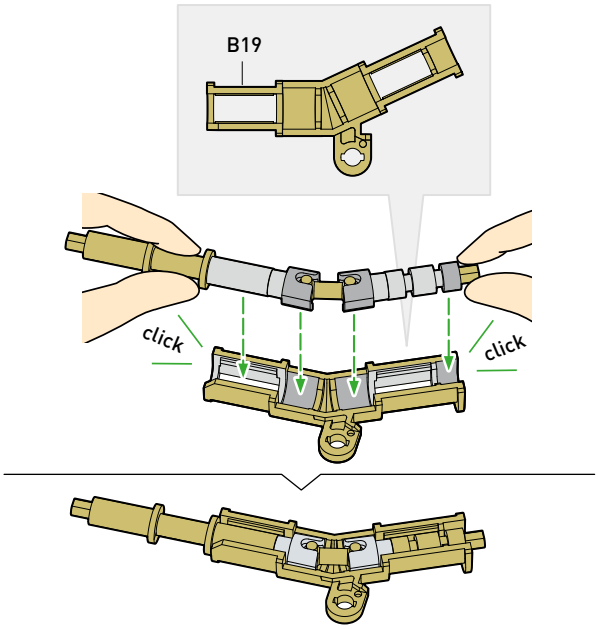

Steering column for left-hand drive

Turn the steering column.
Make sure it rotates smoothly.

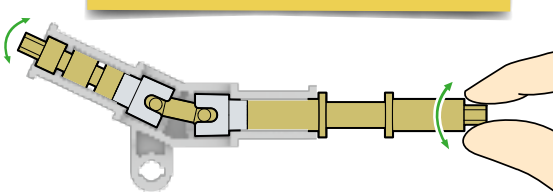

Turn the steering column.
Make sure it rotates smoothly.

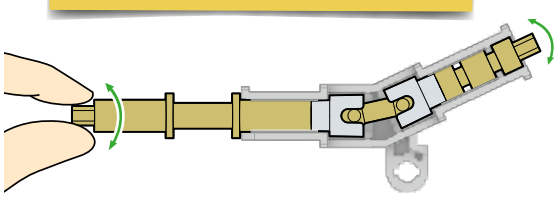

ASSEMBLING THE CHASSIS

1

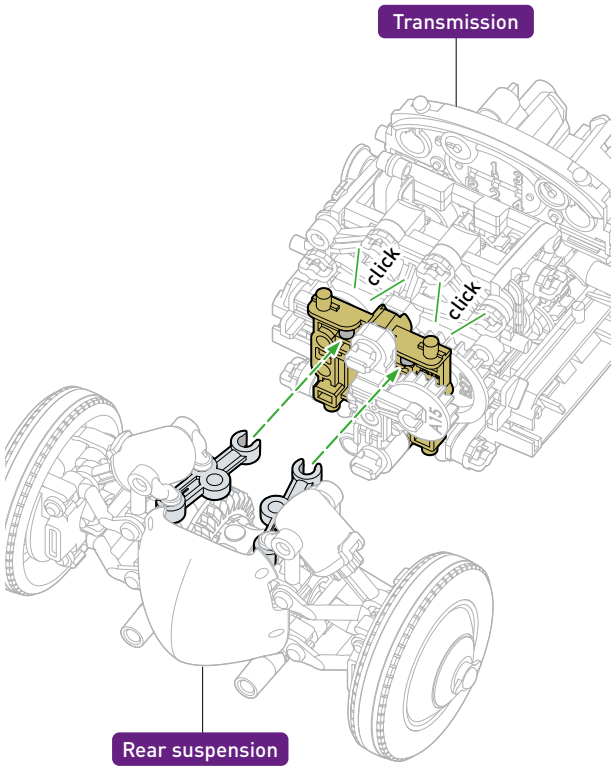

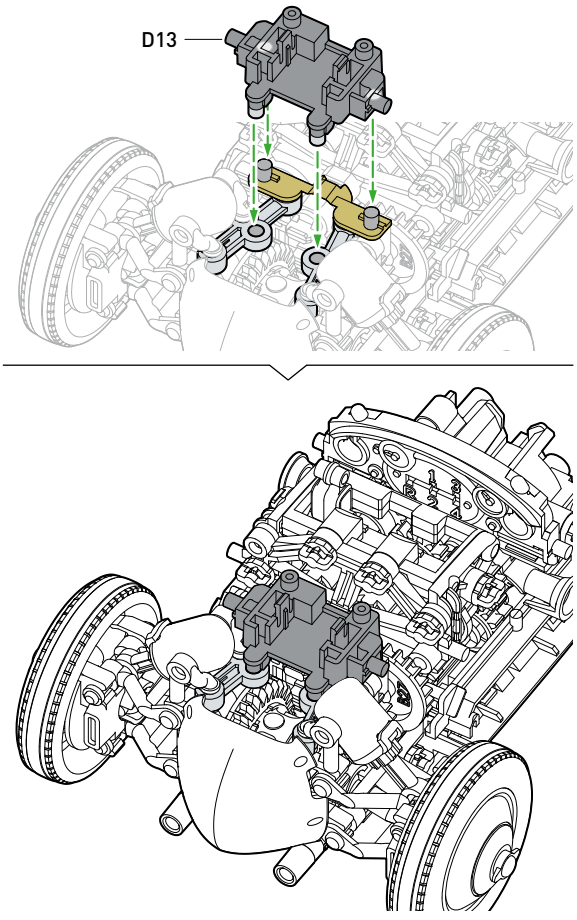

2

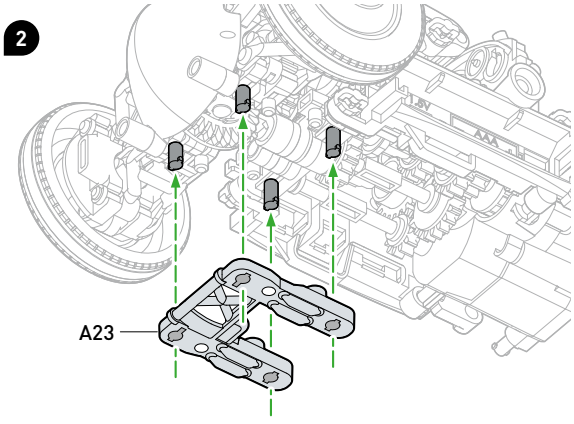

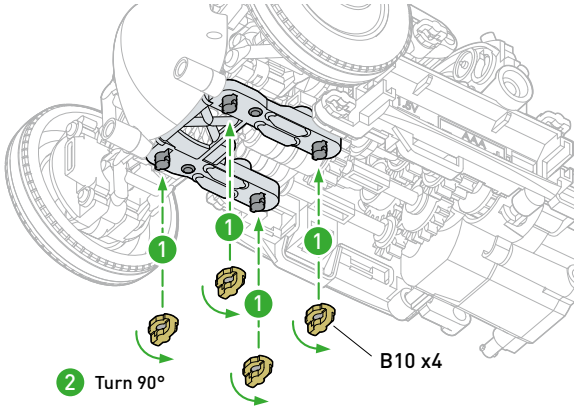

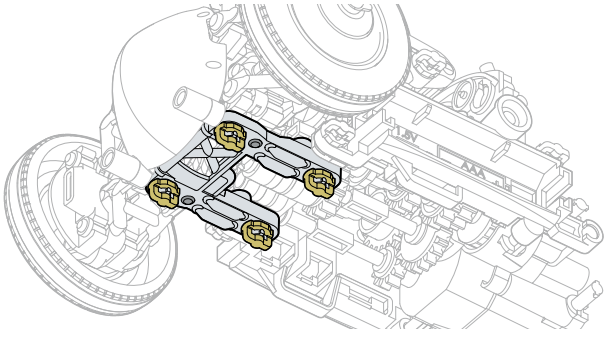

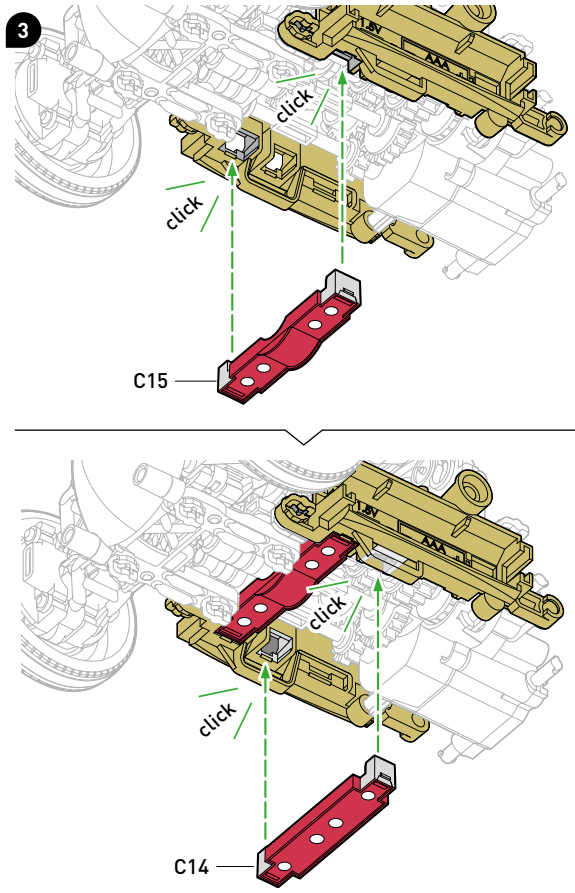
3
click
click
C15
click
C14

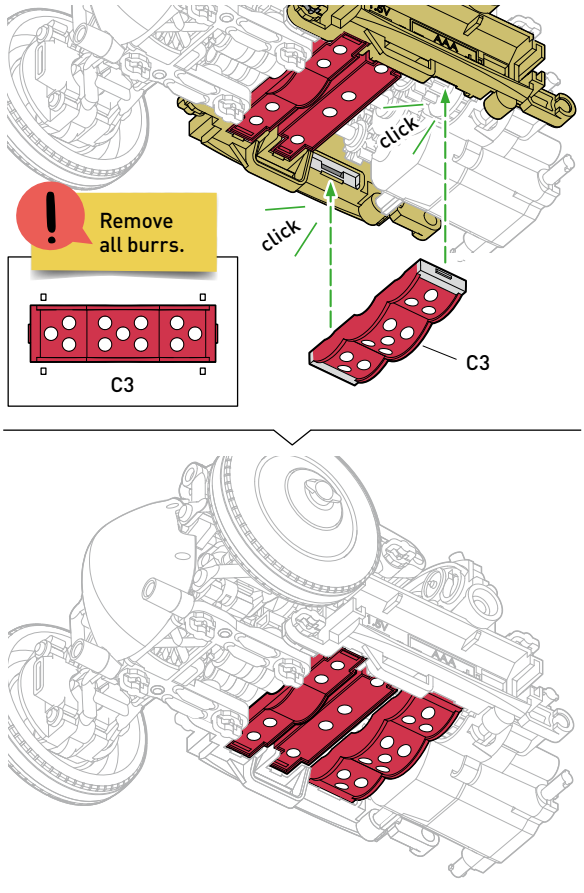
click
Remove
all burrs.
C3
click
C3

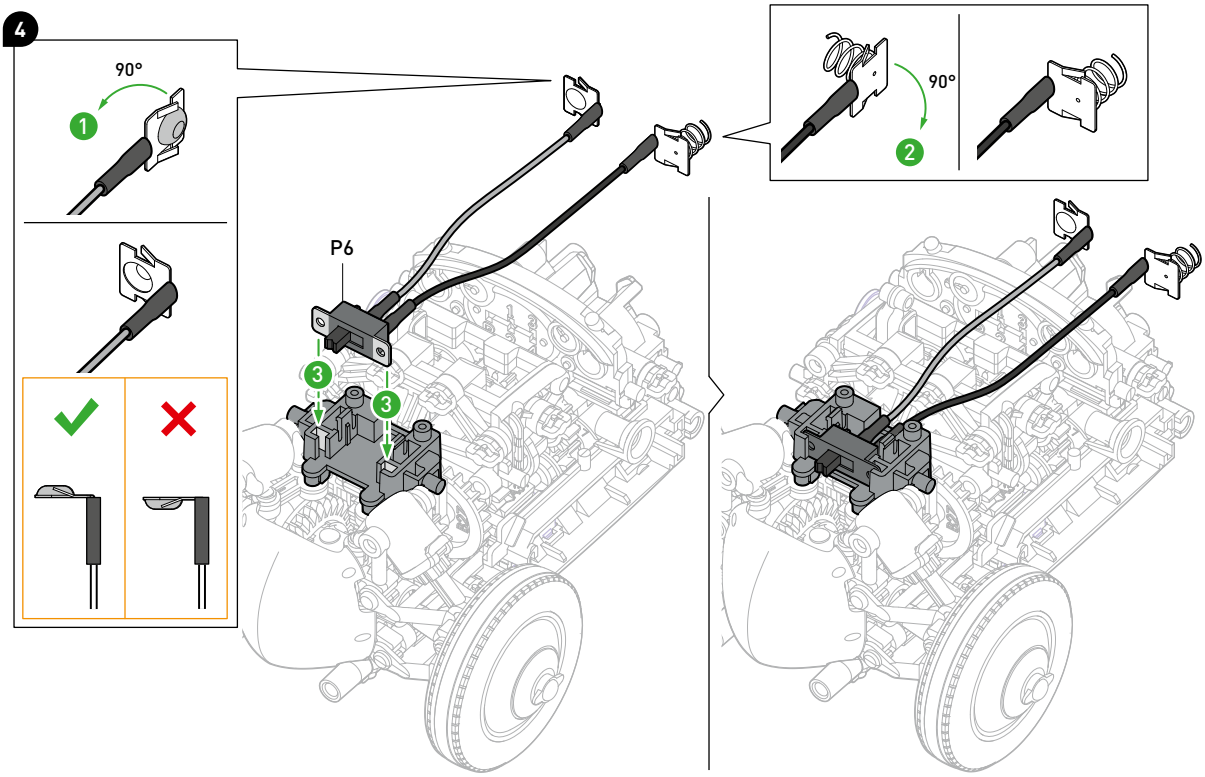
4
90°
1
P6
3
3
90°
2

5

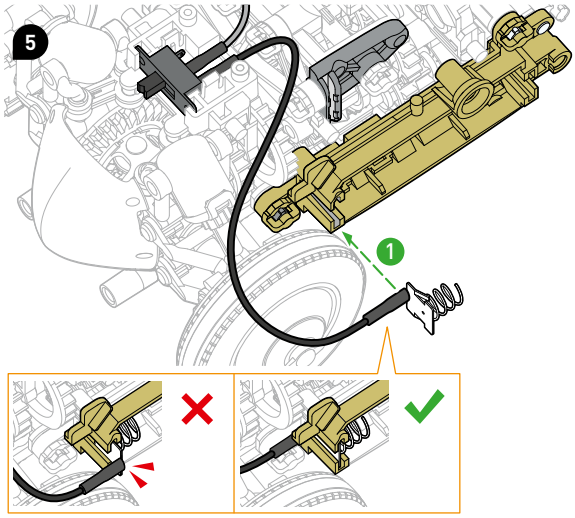

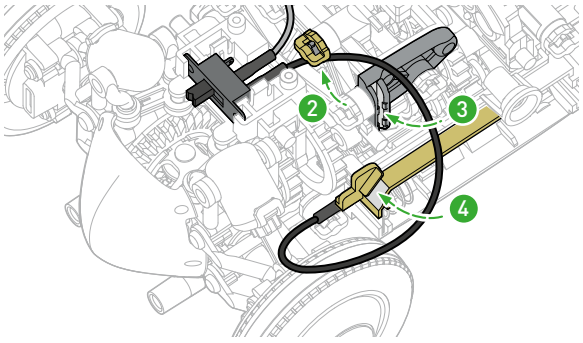

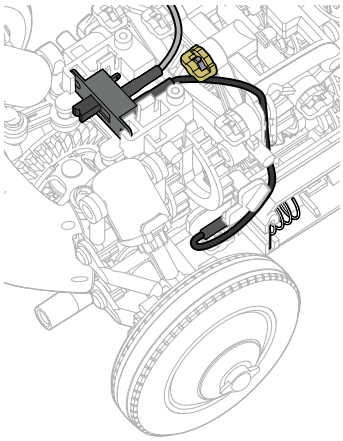

Use the C13 tool to push the cable into the recess.

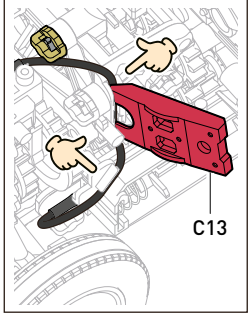

6

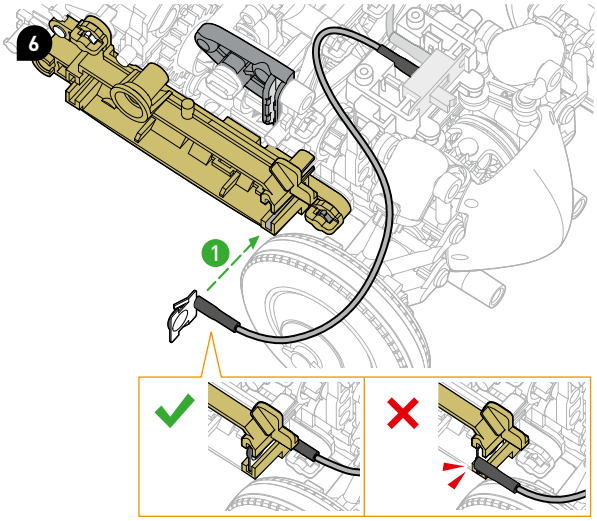

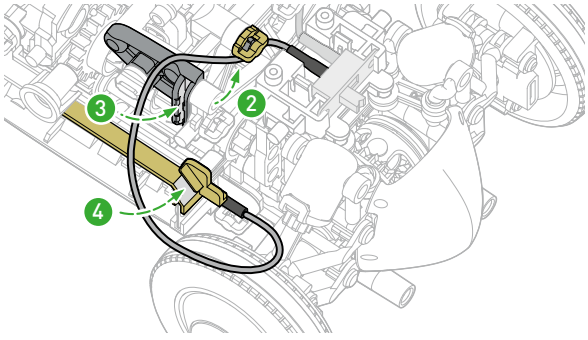

Use the C13 tool to push the cable into the recess.

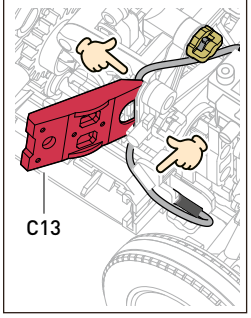

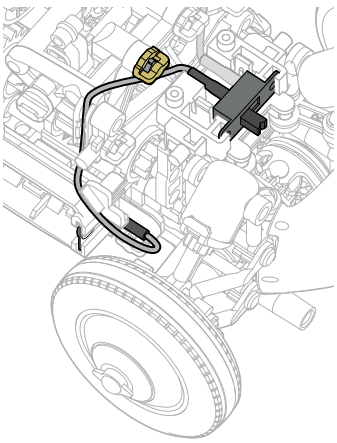

7

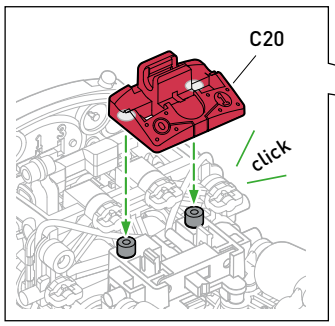

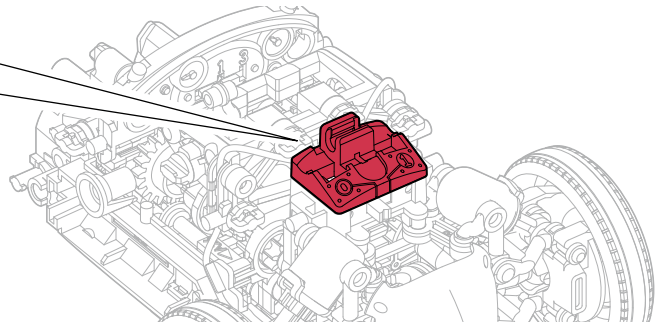

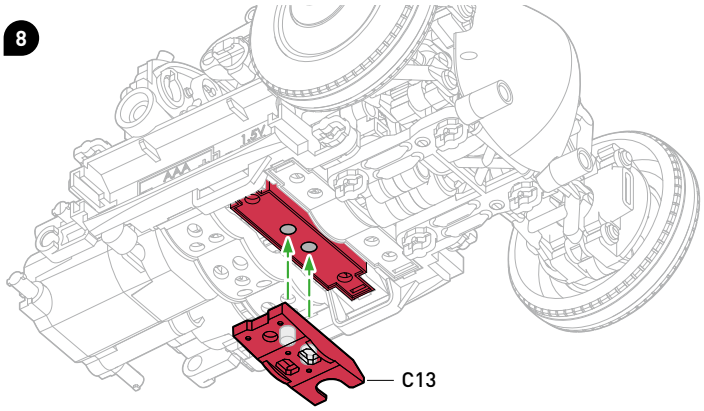
8
C13

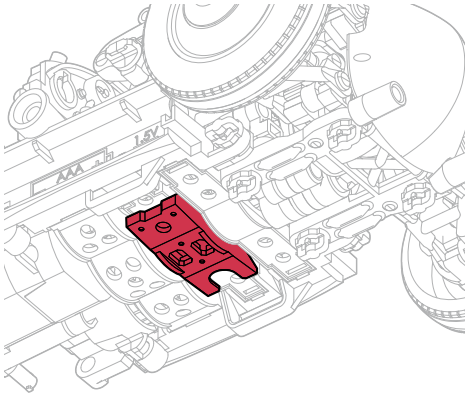

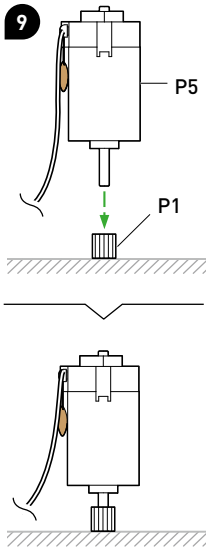
9
P5
P1

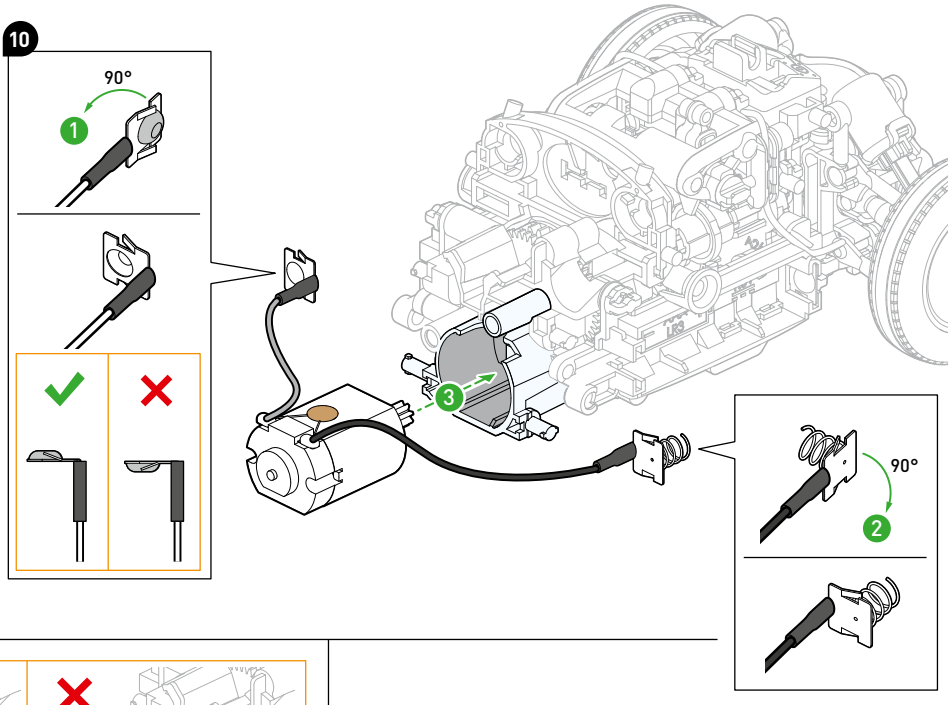
10
90°
1
3
90°
2

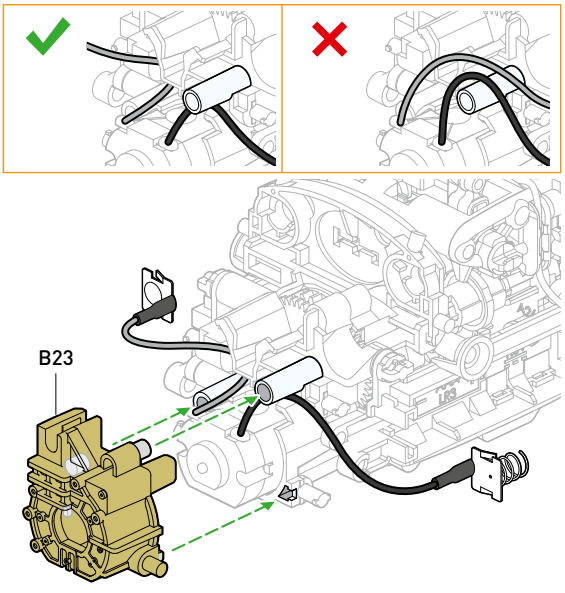
B23

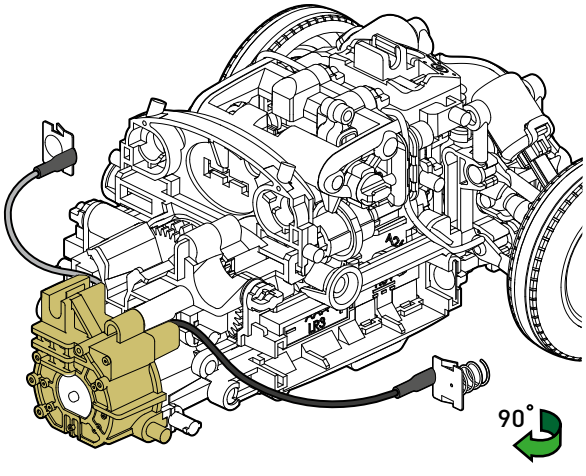
90°

11

Front suspension

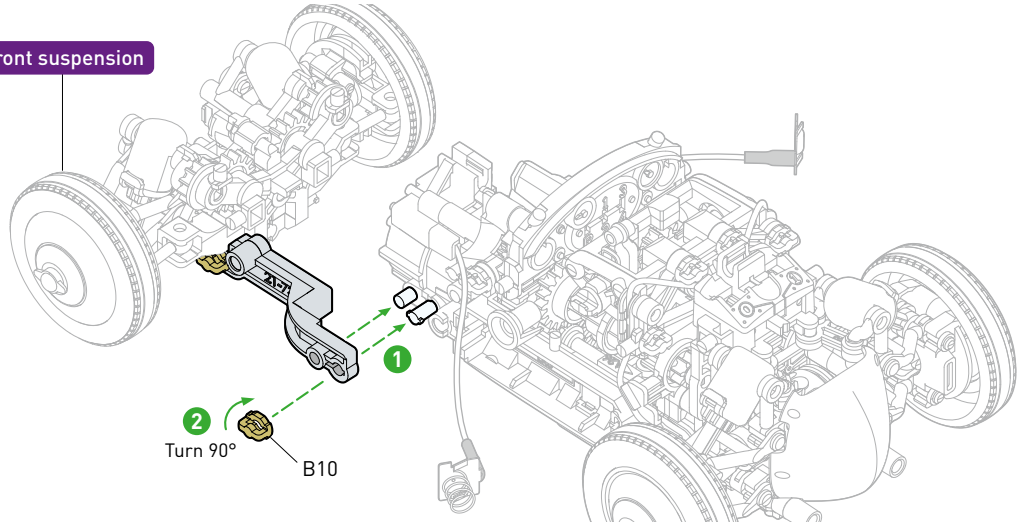

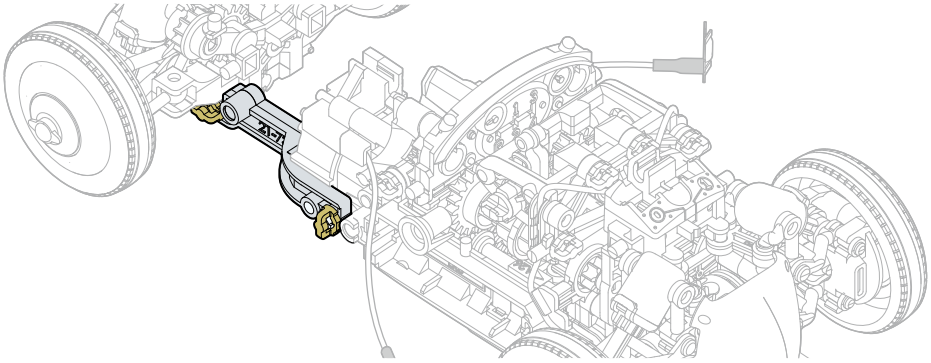

12

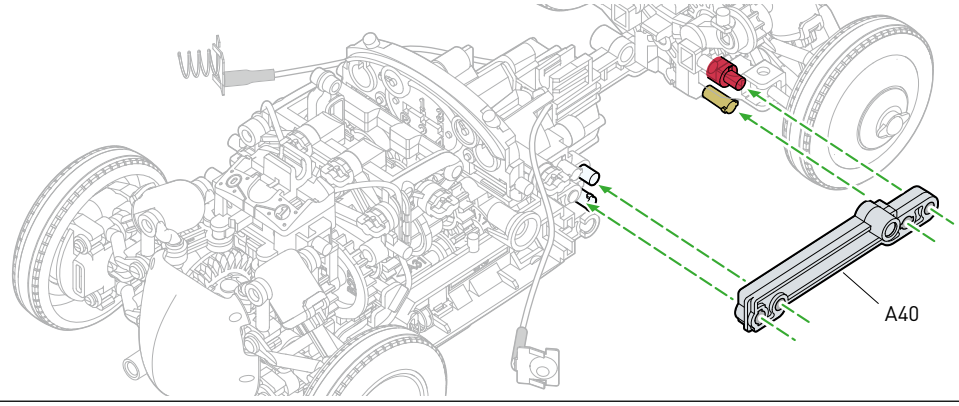

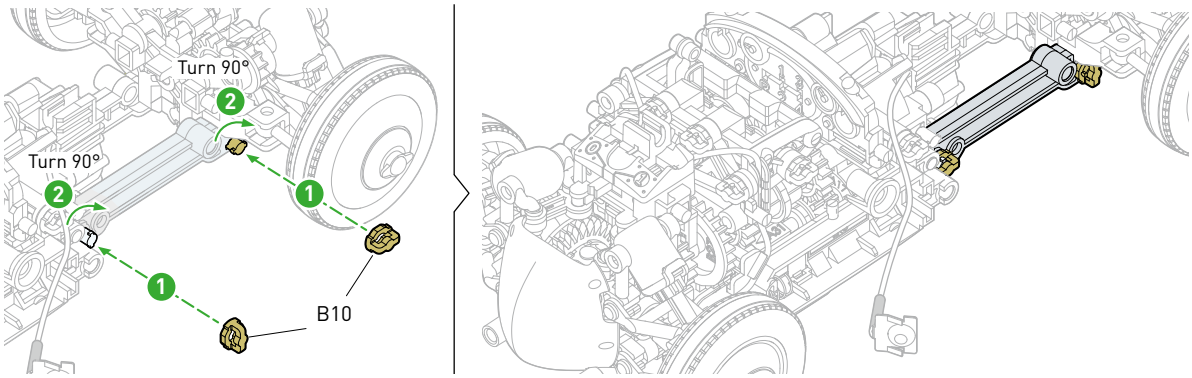



13

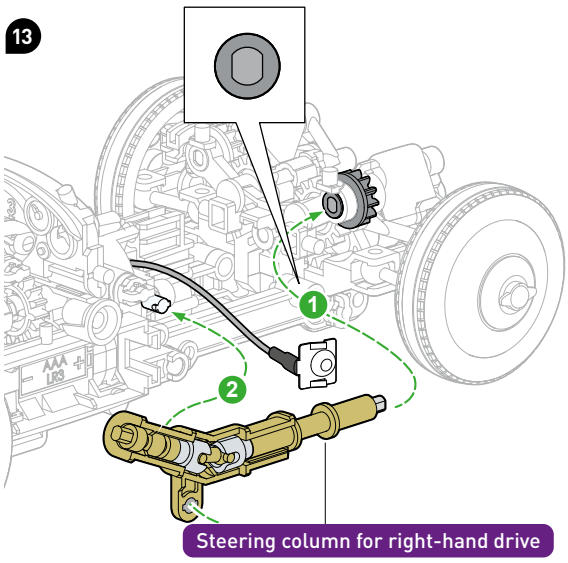
1
2
Steering column for right-hand drive

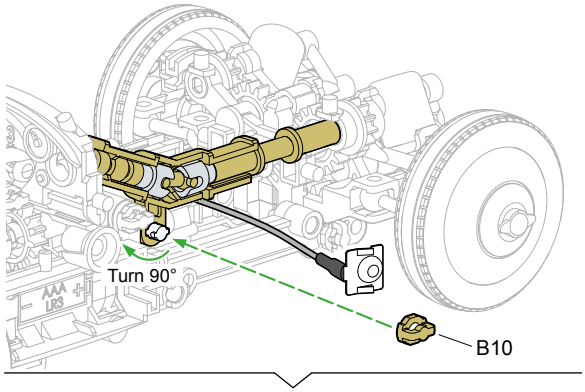
Turn 90°
B10

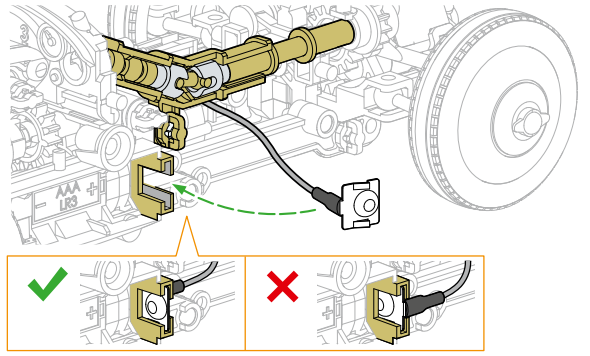

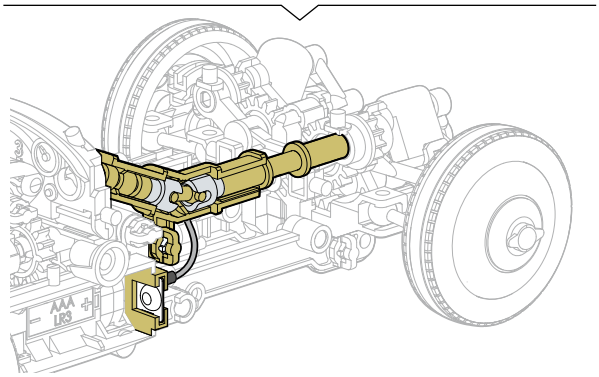

14

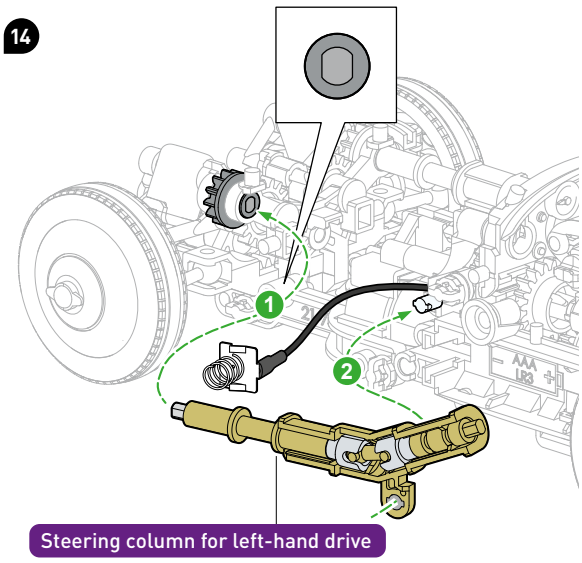
1
2
Steering column for left-hand drive

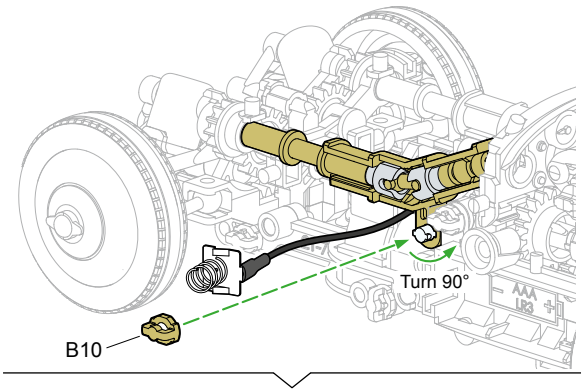
Turn 90°
B10

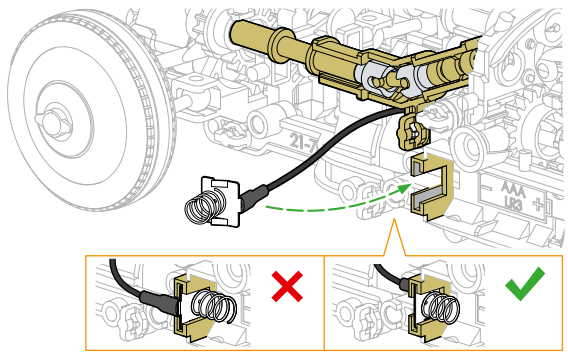

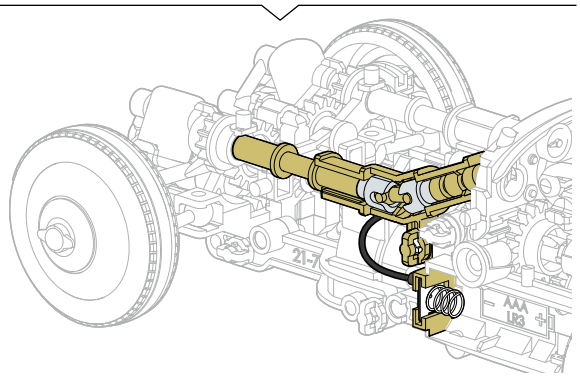

15

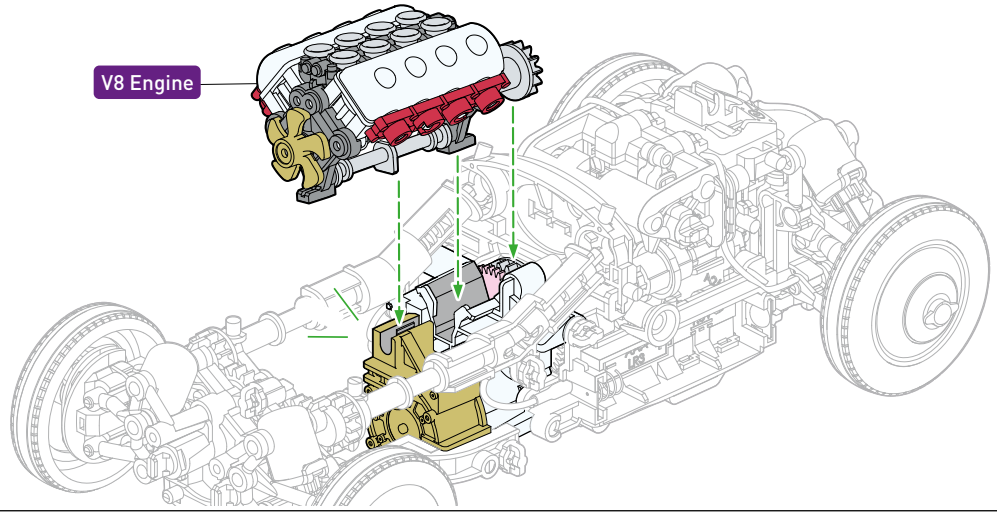

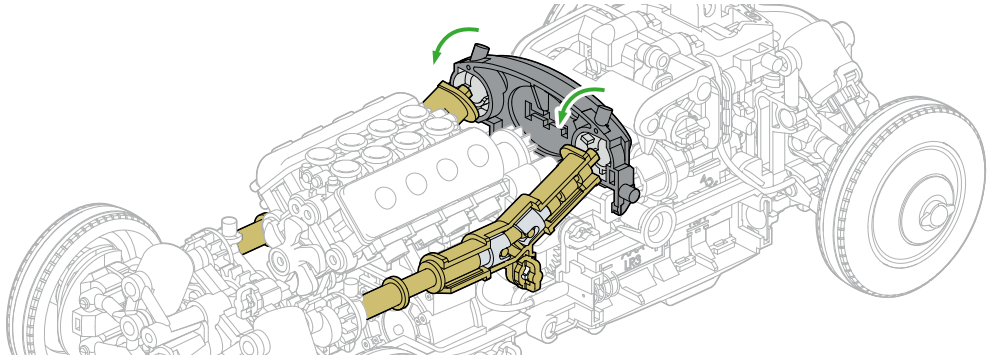

16

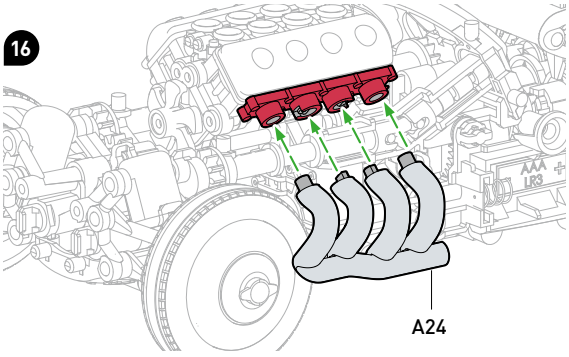

17

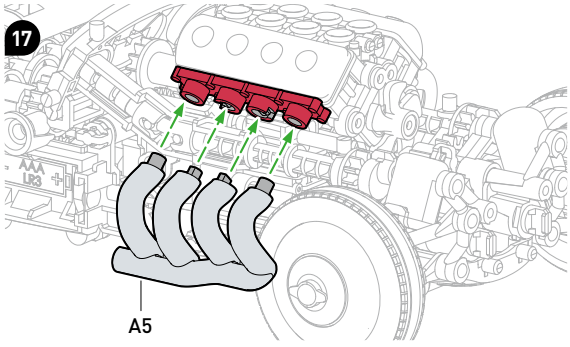

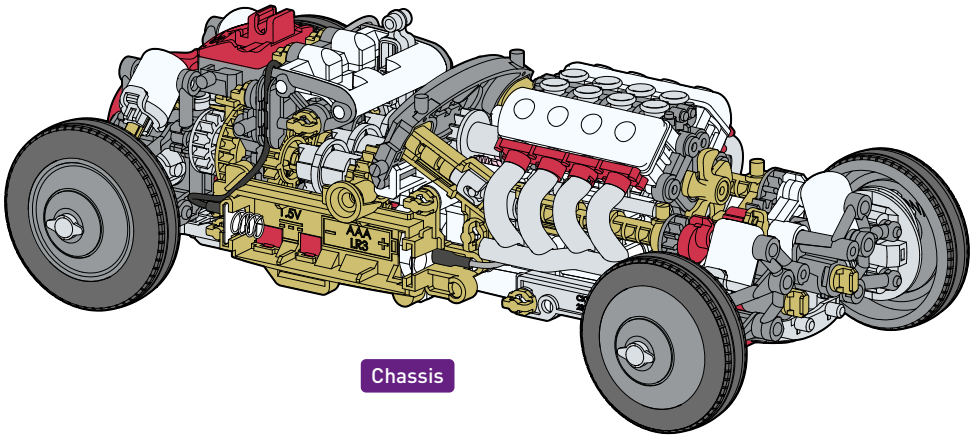

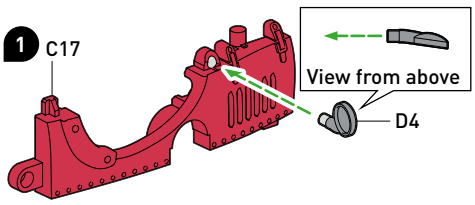
1
C17
View from above
D4

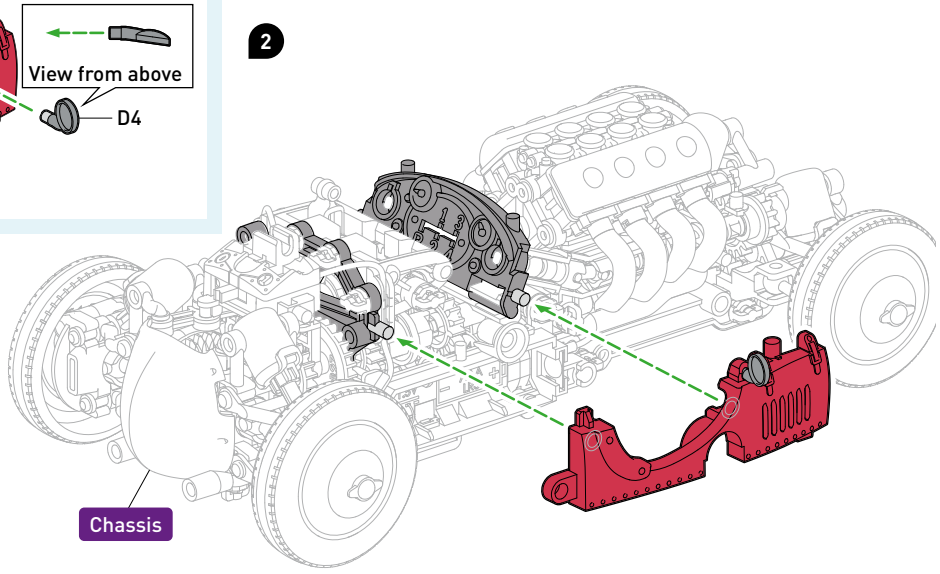
2
Chassis

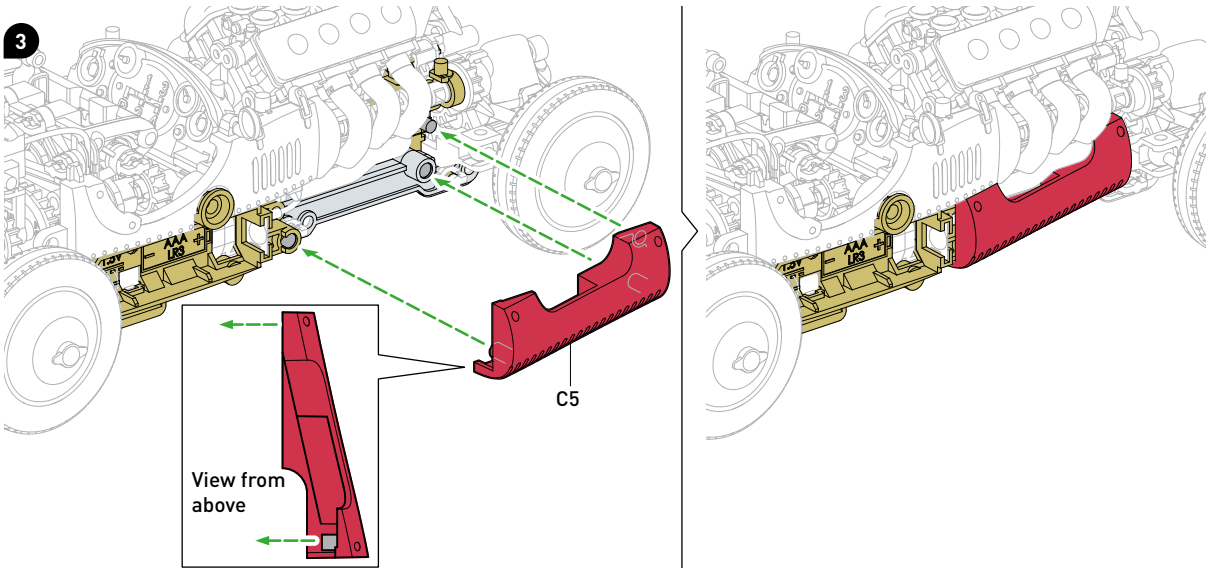
3
C5
View from above

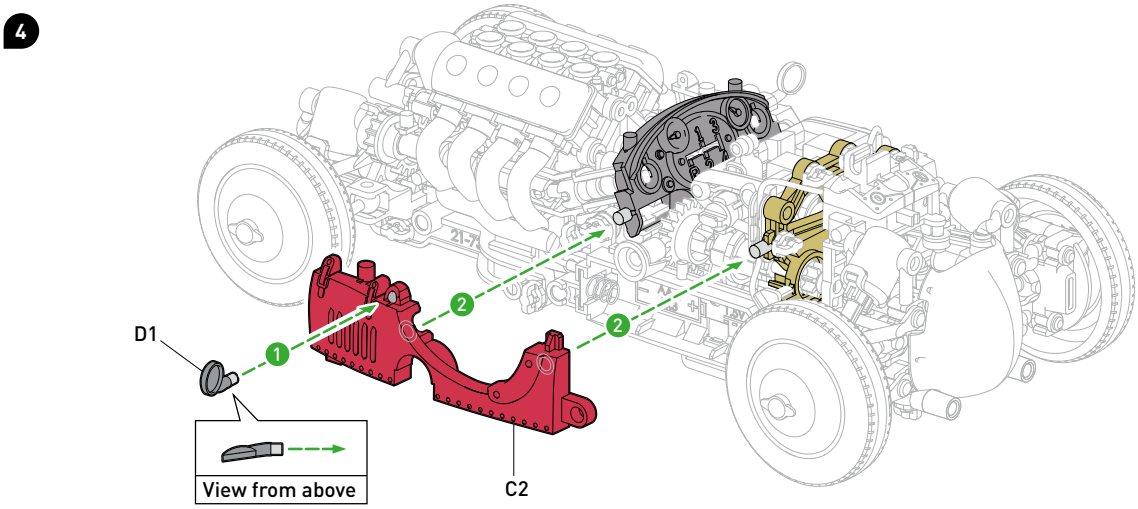
4
D1
1
2
2
C2
View from above

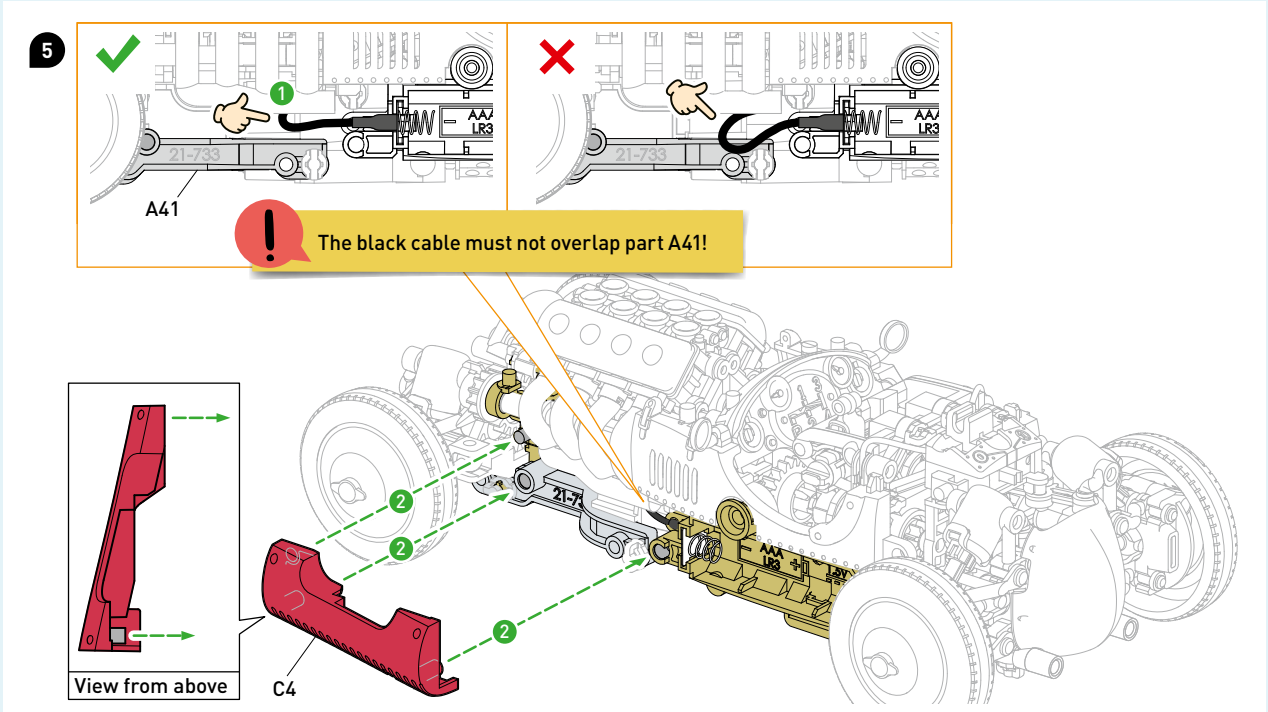
5
1
A41
The black cable must not overlap part A41!
2
2
2
C4
View from above

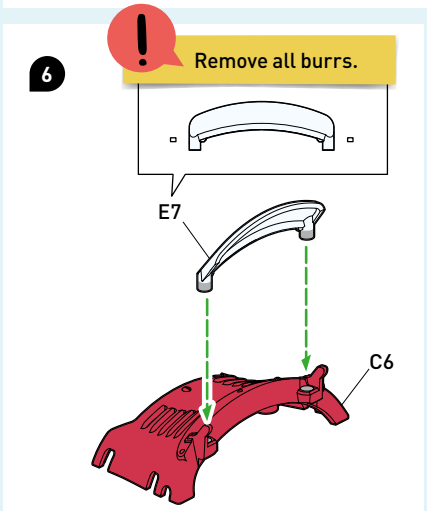
6
Remove all burrs.
E7
C6

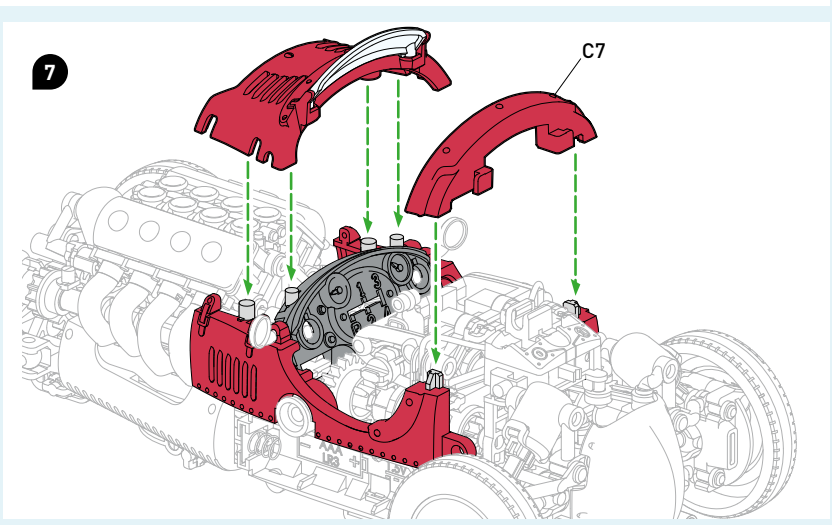
7
C7

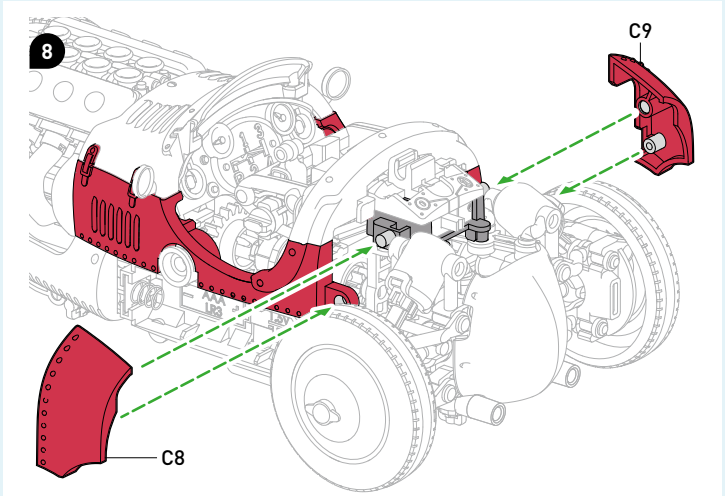
8
C9
C8

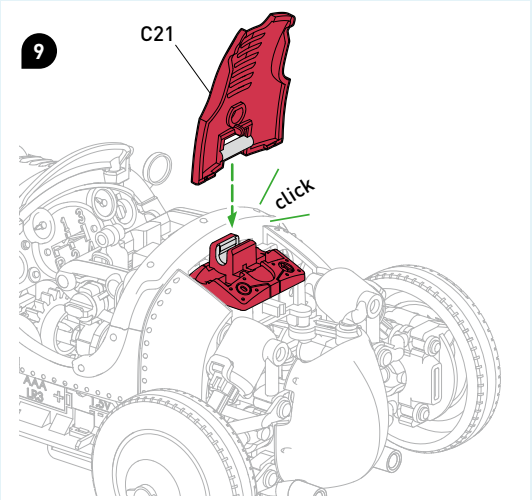
9
C21
click

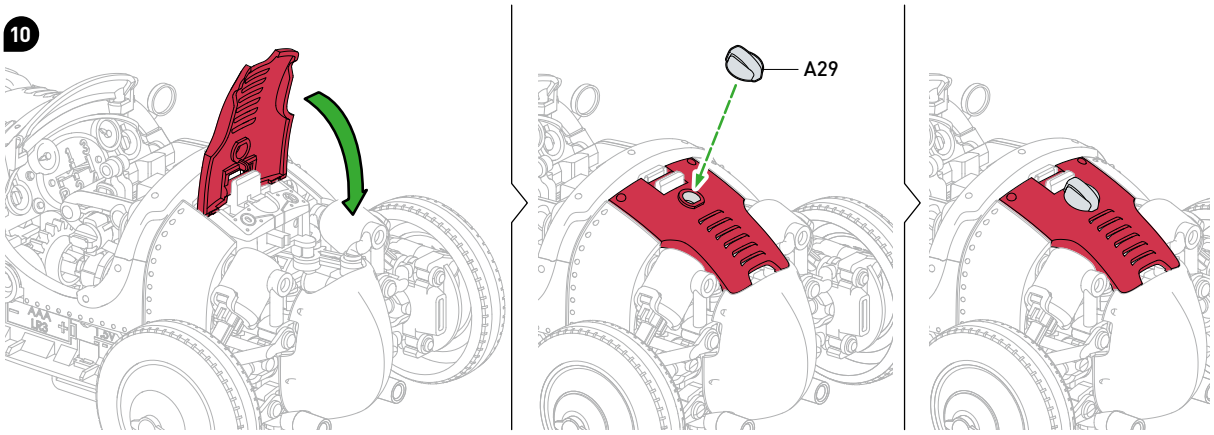
10
A29

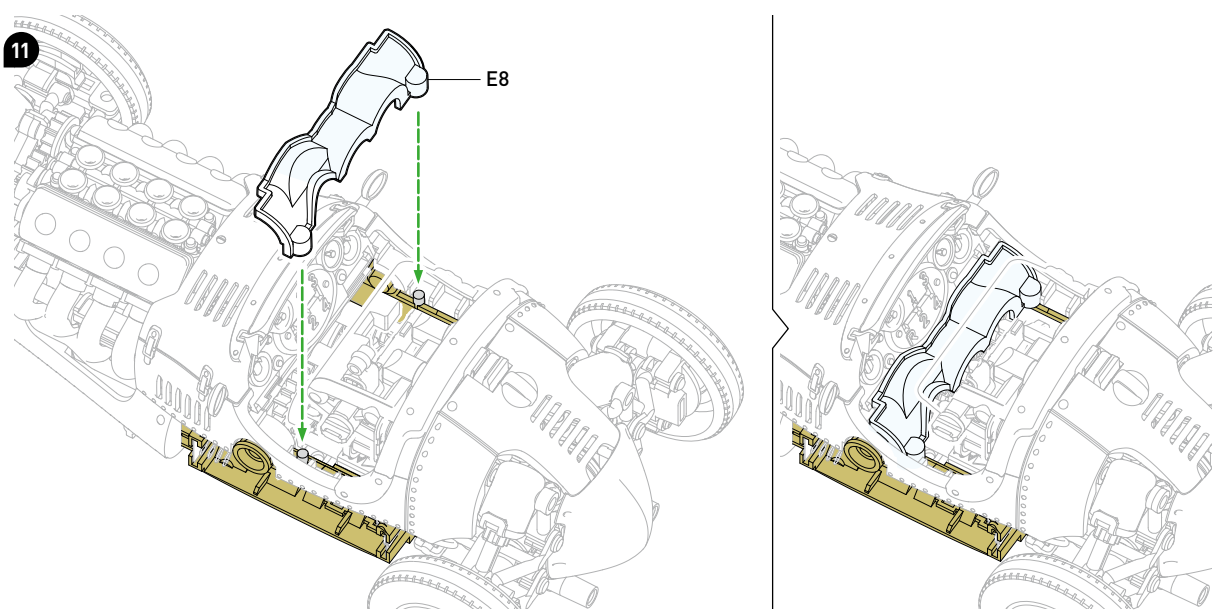
11
E8

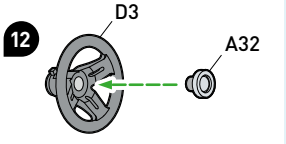
12
D3
A32

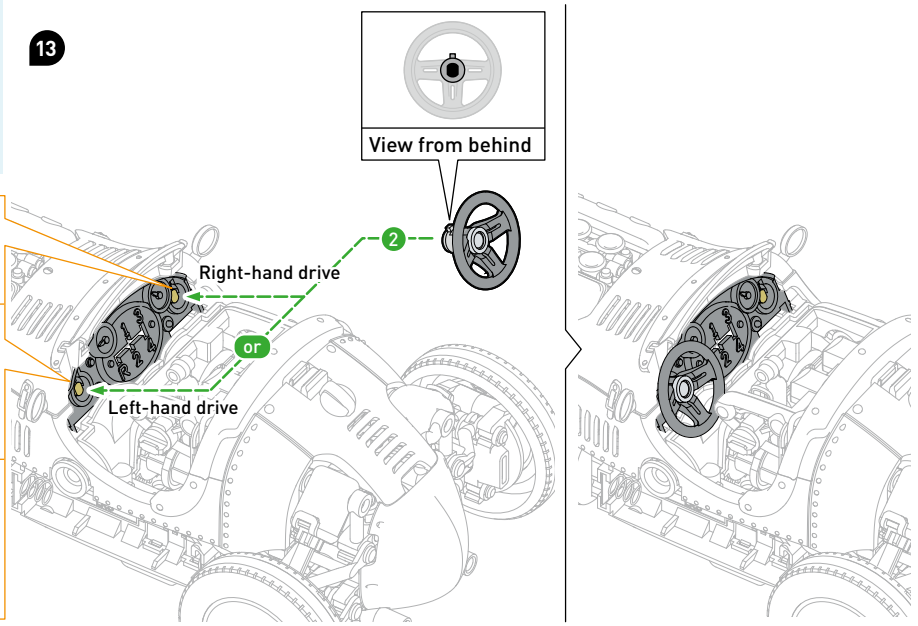
13
View from behind
1 Keep the front wheels straight so that B28 is positioned as shown in the illustration.
B28
2
Right-hand drive
or
Left-hand drive

14

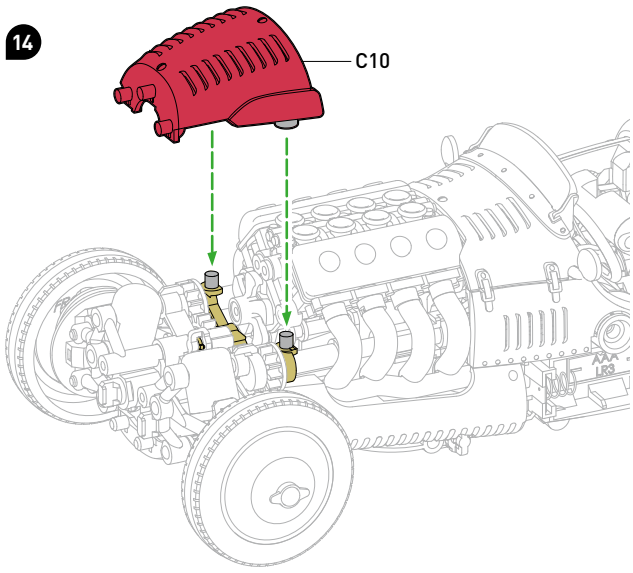

15

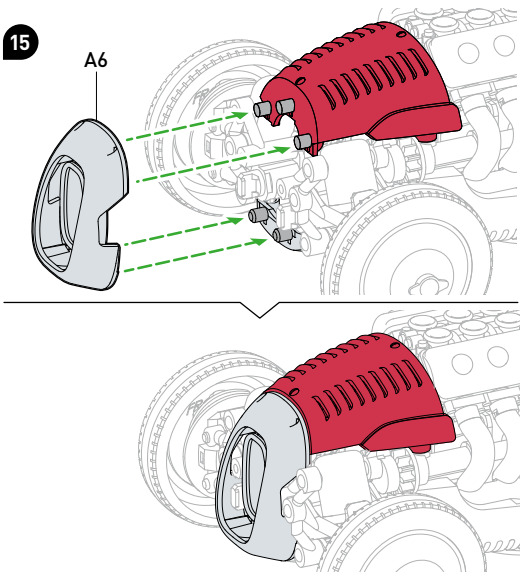

16

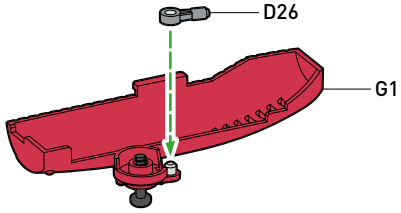

17

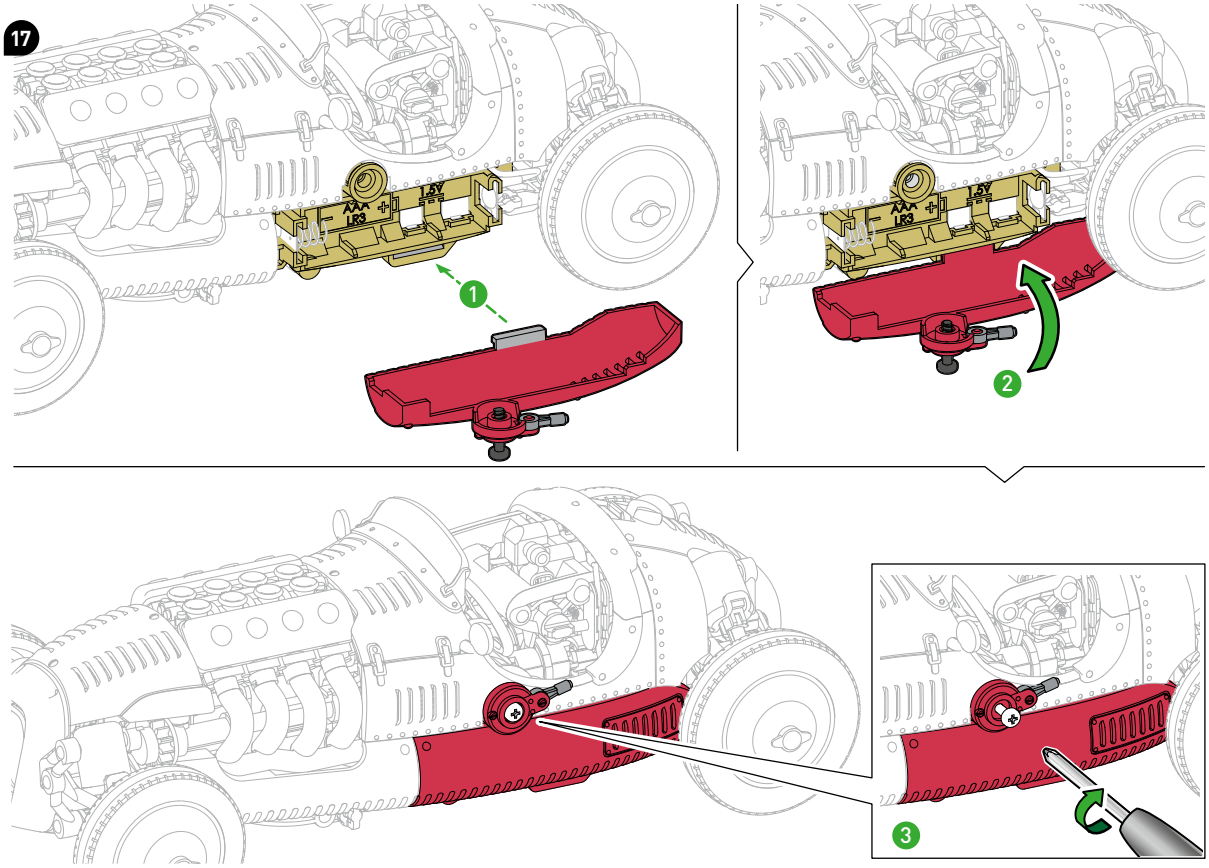



18

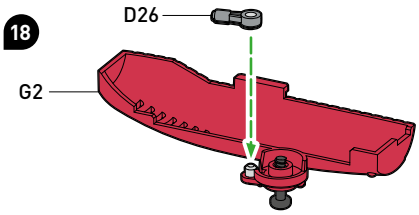

19

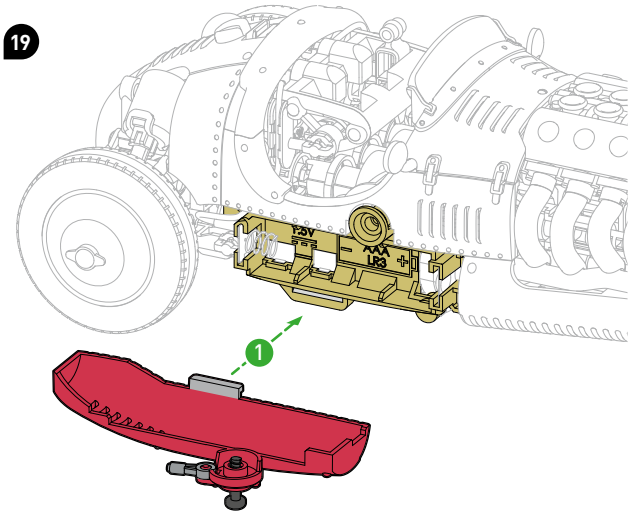

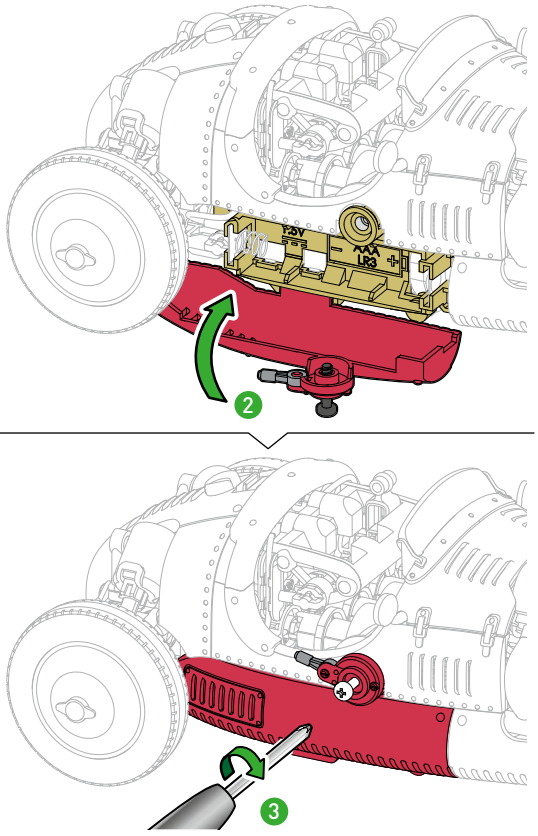

Done!

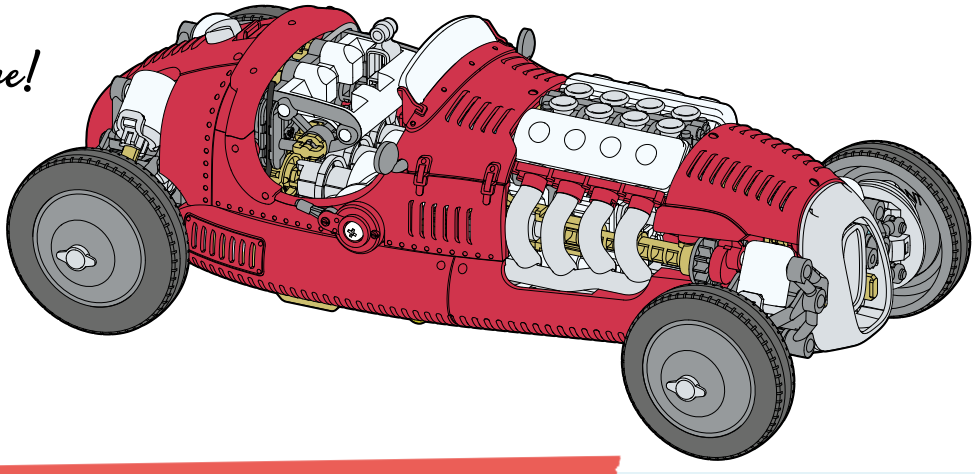

INSERTING AND CHANGING THE BATTERIES

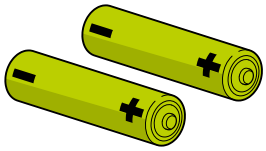

2x AAA batteries
(1.5-volt, type LR03)

Only insert the batteries once the V8 Race Car is fully assembled. Observe the correct polarity (+/-) when inserting the batteries. Please also note the battery handling instructions on page 2.

Inserting, removing, and changing batteries should be done by adults or under adult supervision. Make sure the V8 Race Car is turned off.

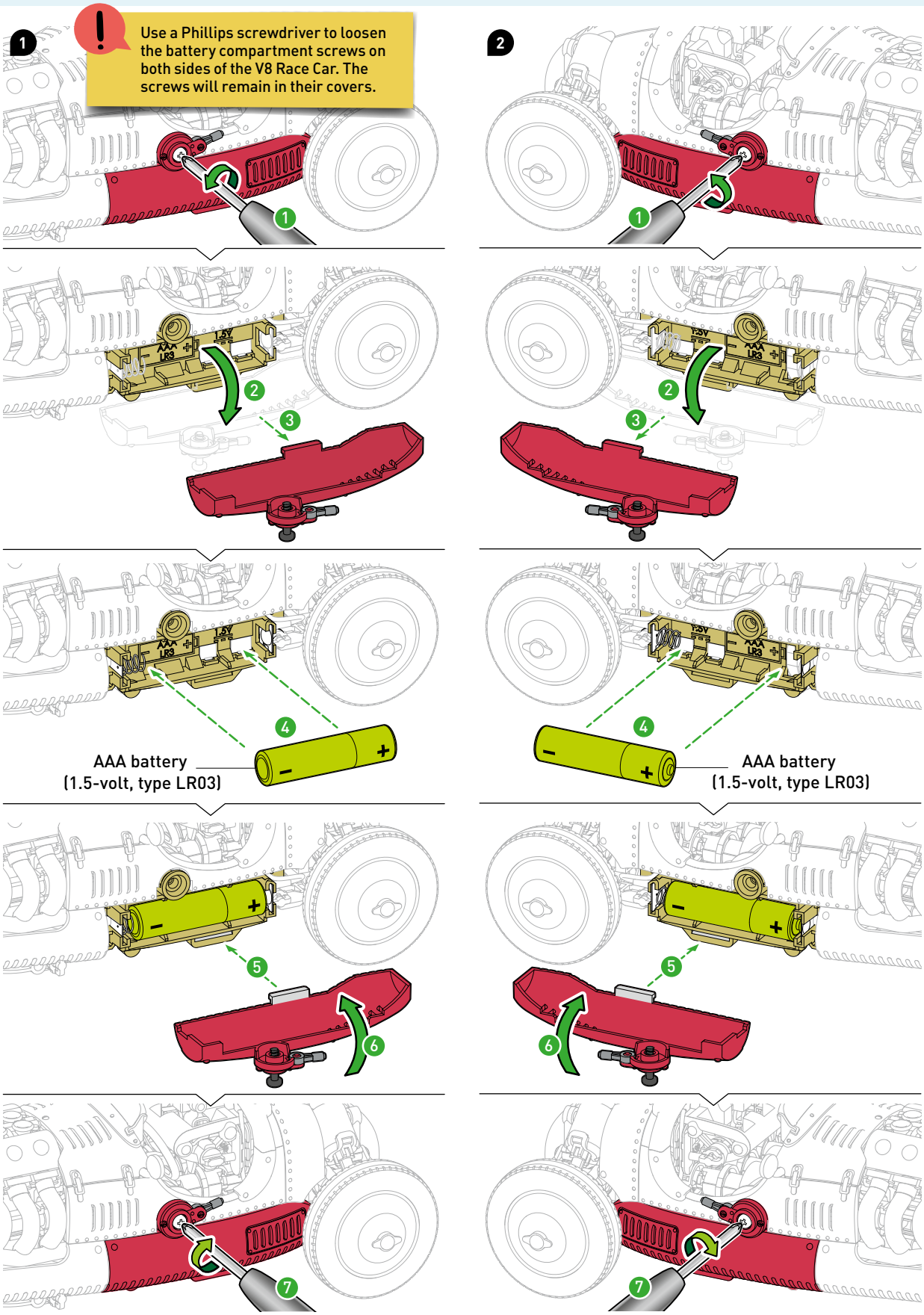
1
Use a Phillips screwdriver to loosen the battery compartment screws on both sides of the V8 Race Car. The screws will remain in their covers.
2
AAA battery
(1.5-volt, type LR03)
AAA battery
(1.5-volt, type LR03)

The difference between the chassis and the body

The **chassis** (also called the frame) is the supporting structure of a vehicle and carries all technical and mechanical components, such as the wheel suspension, drive units (engine and transmission), and braking and steering systems. The chassis ensures the vehicle's functionality and stability.

The **body** is the outer shell of the vehicle. It determines the car's appearance, protects the occupants, and influences its aerodynamics. Traditionally, the body is mounted on the chassis.

Many modern vehicles no longer have a separate chassis. Instead, they use a self-supporting body, also known as a monocoque or unibody. The body structure itself assumes the load-bearing function, replacing the traditional chassis.

In motorsports, such as Formula One, monocoques are made of extremely lightweight and strong carbon fiber composites. They simultaneously form the passenger compartment and the central load-bearing part of the entire vehicle.

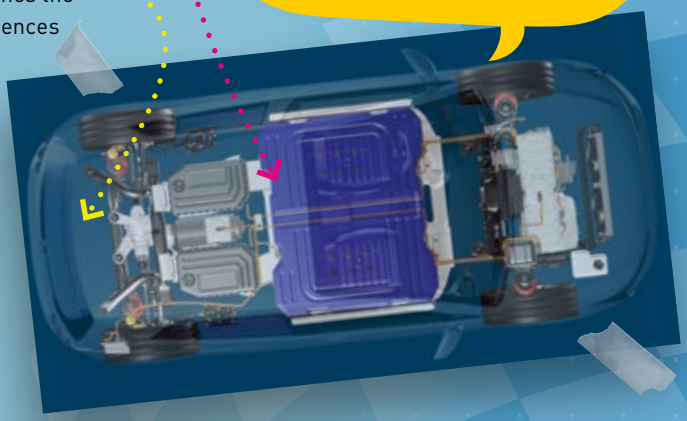

The image shows the chassis of an electric car, which is depicted beneath the body. It has everything a car needs to drive.



Gasoline 4-stroke engine

A gasoline engine is an internal combustion engine that converts chemical energy into mechanical energy through fuel combustion. It uses external ignition in the form of a spark plug, which ignites a compressed fuel-air mixture. Typically, a gasoline engine is a four-stroke engine. The term refers to a cycle consisting of four strokes or steps. During each stroke, a piston in the engine moves up or down once. The model engine in your V8 Race Car has eight pistons in cylinders; that's why it's called "V8".

While your V8 Race Car includes a model of a gasoline-powered internal combustion engine, its motor is powered by electric batteries, like an electric vehicle.

1. Intake: During intake, the exhaust valve closes and the intake valve opens. The piston then moves downward, sucking in the fuel-air mixture. Once the piston reaches the bottom, the intake valve closes, and the second stroke begins.

2. Compression: Both valves are closed. The piston moves upward again, compressing the mixture, which increases pressure and temperature. Almost at the top, the spark plug ignites the mixture.

3. Combustion: The combustion of the mixture suddenly increases pressure and pushes the piston downward again – this is where the driving energy is created. Towards the end of this stroke, the exhaust valve opens.

4. Exhaust: As the piston moves upward again, the burned exhaust gases are pushed out of the cylinder through the exhaust valve. Shortly before the piston reaches the top again, the intake valve opens again, and the whole process begins again.

In this way, chemical energy is continuously generated into mechanical rotational movement.





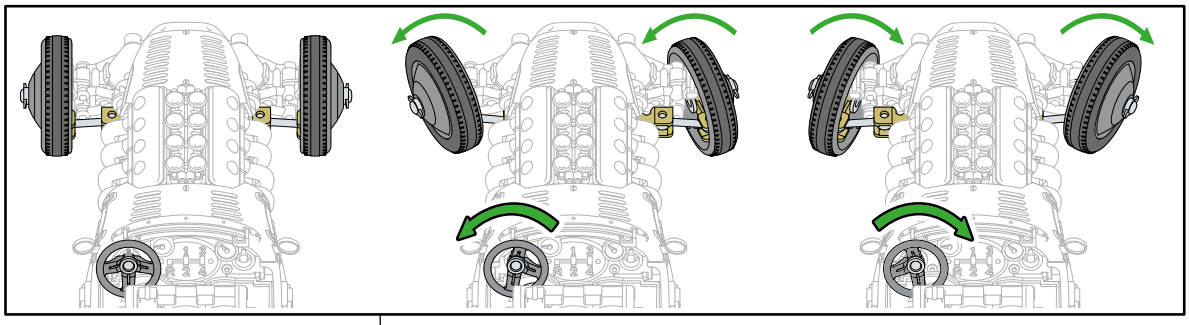

When you turn the steering wheel, the front wheels turn and the car can steer.

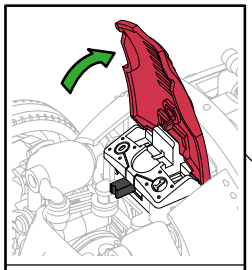

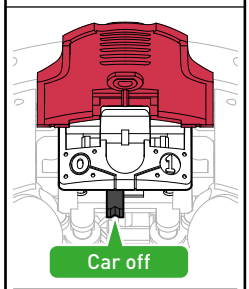

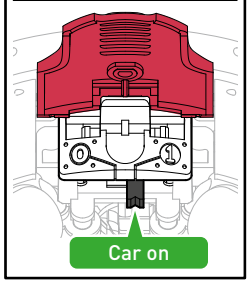

Turn on the power to send energy to the motor.

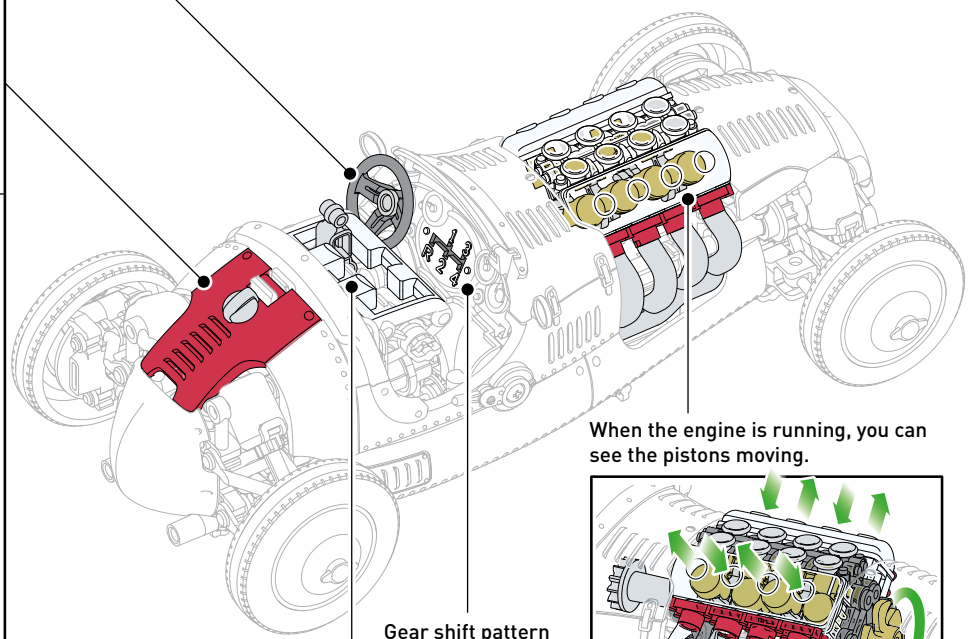

Gear shift pattern

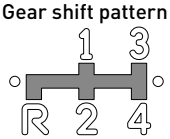

When the engine is running, you can see the pistons moving.

Use the gearshift to change the direction and speed of the car.

N (Neutral)

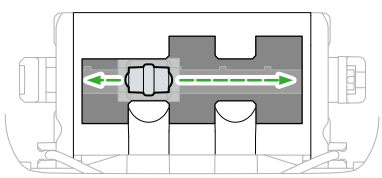

The rear wheels can rotate freely — even without power.

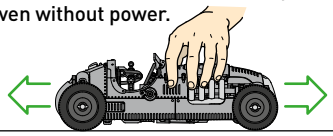

R (Reverse)

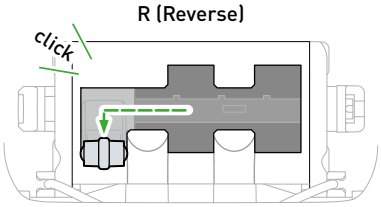

When the engine is running, the power is transferred to the rear wheels and the car moves backward.

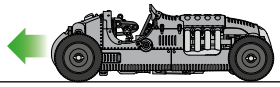

1 (1st Gear)

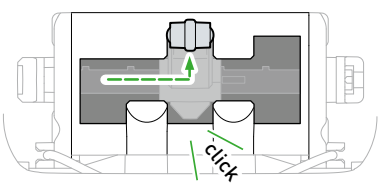

When the engine is running, power is transferred to the rear wheels and the car moves forward.

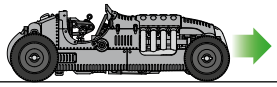

For gears 2-4, shift as shown above. Speed increases with higher gears.
Tip: Shifting gears is easier after switching on the vehicle!

Important: Lift the car off the ground before changing gears.

© 2025 Franckh-Kosmos Verlags-GmbH & Co. KG • Pfizerstrasse 5–7 • 70184 Stuttgart, DE

This work, including all its parts, is copyright protected. Any use outside the specific limits of the copyright law is prohibited and punishable by law without the consent of the publisher. This applies specifically to reproductions, translations, microfilming, and storage and processing in electronic systems and networks. We do not guarantee that all material in this work is free from other copyright or other protection.

We expressly reserve the right to use works and/or parts thereof published by us for text and data mining, for the purpose of AI training, and/or for other purposes with AI.

Text: Sven Nam Karsten
Technical product development: Deryl Tjahja, CIC Components Industries Co., Ltd., Taiwan
English language editing: Ava Tessitore, Hannah Mintz

Manual design concept: Atelier Bea Klenk, Berlin
Manual layout: Olaf Peters, Freitag van Geigk, Hannover
Illustration, material images: CIC Components Industries Co., Ltd., Taiwan
Manual photos: Jamie Duplass (all tape strips © fotalia); loraks, p. 12 tl; pavelvozmischev, p. 12 br; Photocreo Bednarek, p. 13 tr; Lens Stream, p. 13 b; pgottschalk, p. 38 tr; FiledIMAGE, p. 38 mr; FiledIMAGE, p. 38 b; innafoto2017, p. 39 r (all previous © Adobe Stock); Alexander Andrews, p. 12 mr; Nils Keesmekers,p.13 ml (all previous © Unsplash)

Design concept & packaging design: Peter Schmidt Group, Hamburg
Packaging layout: Olaf Peters, Freitag van Geigk, Hannover
Additional packaging layout: Dan Freitas
3D images for packaging: CIC Components Industries Co.

The publisher has made every effort to identify the owners of the rights to all photos used. If there is any instance in which the owners of the rights to any pictures have not been acknowledged, they are asked to inform the publisher about their copyright ownership so that they may receive the customary image fee.

1st English Edition © 2025 Thames & Kosmos, LLC, Providence, RI, USA
Thames & Kosmos ® is a registered trademark of Thames & Kosmos, LLC.

Distributed in North America by Thames & Kosmos, LLC. Providence, RI 02903
Phone: 800-587-2872; Web: www.thamesandkosmos.com

We reserve the right to make technical changes.

Printed in Taiwan/Imprimé en Taïwan



620403-03-031125

Do you have any questions?
Our technical support team
would be glad to help you!

Thames & Kosmos US
Email: support@thamesandkosmos.com
Phone: 1-800-587-2872