KINGSTON

TO ORDER PARTS, CALL: 1-877-252-7277
www.kingstonbrass.com

KB8340,1,2,7,8AXSO

Single Handle Pressure Balanced Tub & Shower Faucet, Shower Only

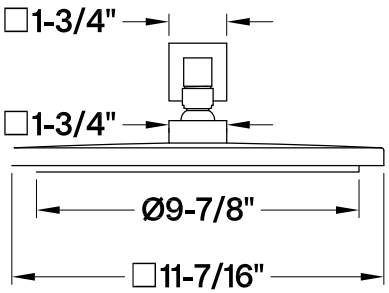

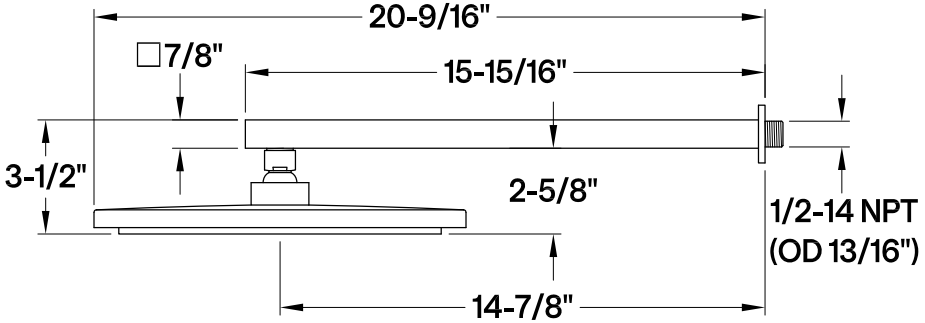

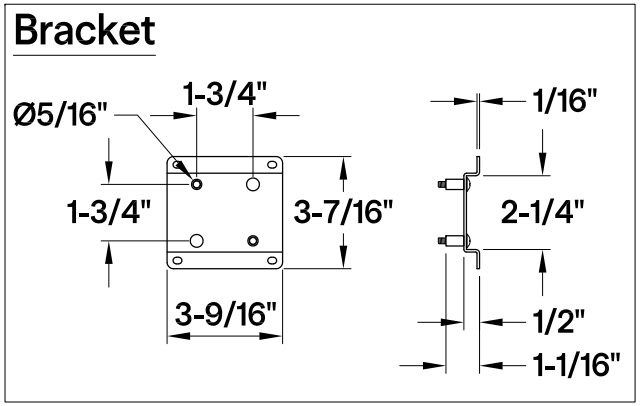

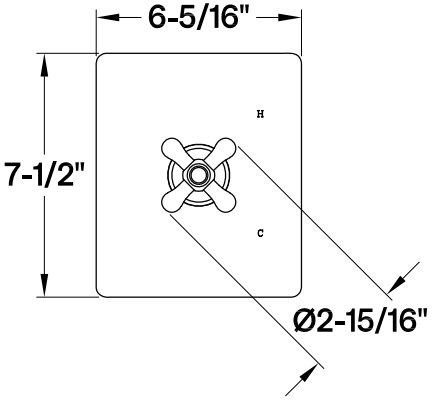

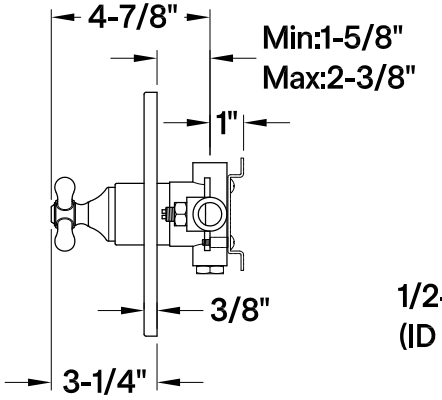

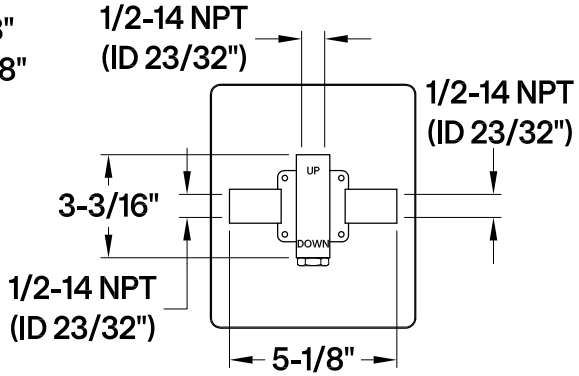

2026-04-A