NOTES:

1. OPEN DOOR VIEW INCLUDES HINGE SPACE OFFSET.

PRODUCT	W1	L1	DRAWER FRONT SIZE	DOOR SIZE
			ROUNDED TO THE NEAREST 1/32	
VB12	12"	10 1/8"	10 1/32" X 5 23/32"	10 1/32" X 21 11/32"
VB15	15"	13 1/8"	13 1/32" X 5 23/32"	13 1/32" X 21 11/32"
VB18	18"	16 1/8"	16 1/32" X 5 23/32"	16 1/32" X 21 11/32"

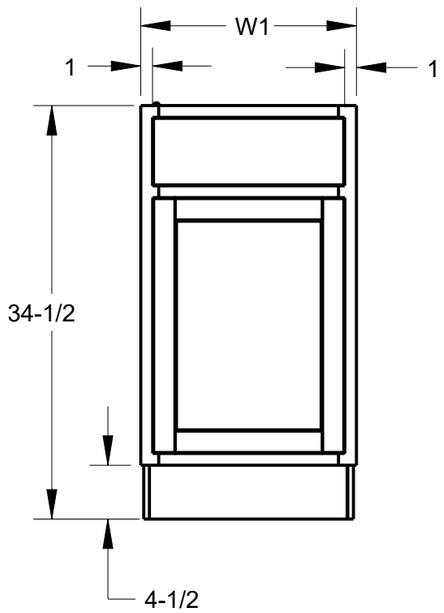

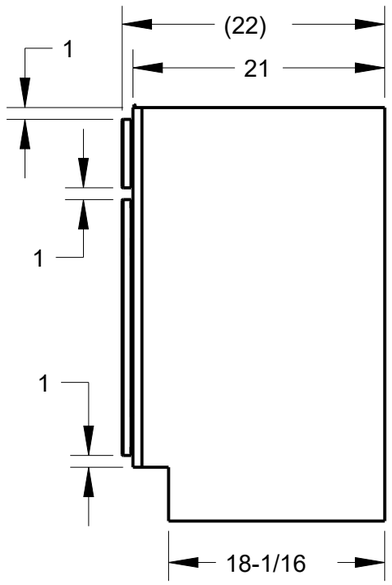

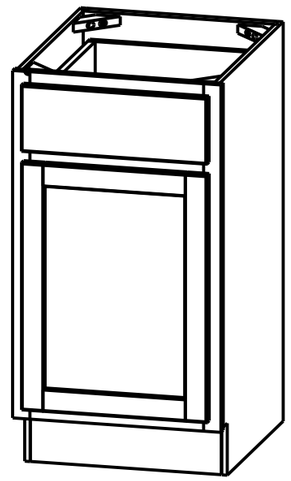

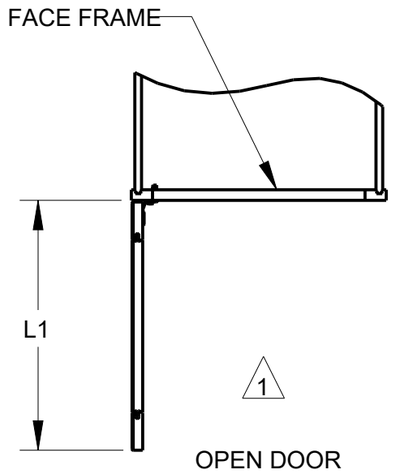

OPEN DOOR

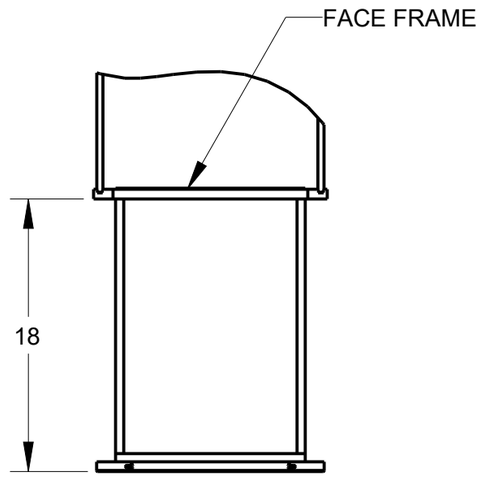

OPEN DRAWER

PRODUCT SHOWN VB18

DOCUMENT STATUS	**Released**

THIRD ANGLE PROJECTION		hardware resources		
MATERIAL: N/A	FINISH: N/A	DESCRIPTION: VB12, VB15, VB18 HALF OVERLAY		
DRAWN BY: ANDY BROWN	DATE: 24FEB2021			
DESIGNED BY: NORTHPOINT	DATE:	DRAWING NUMBER: VB12-VB15-VB18_HALF_OVERLAY		REV: A
APPROVED BY: ALAN CHEN	DATE: 09MAR2021	SIZE: A3	SCALE: 0.071	SHEET: 1 / 1

HARDWARE RESOURCES RESERVES THE RIGHT TO CHANGE SPECIFICATIONS WITHOUT NOTICE.
IN CASE OF A DISCREPENCY, ACTUAL PART GEOMETRY SUPERSEDES THIS DOCUMENT.

THE INFORMATION CONTAINED WITHIN THIS DRAWING IS THE SOLE PROPERTY OF HARDWARE RESOURCES INC. ANY REPRODUCTION IN PART OR WHOLE WITHOUT WRITTEN PERMISSION OF HARDWARE RESOURCES INC. IS PROHIBITED.