KINGSTON

TO ORDER PARTS, CALL: 1-877-252-7277
www.kingstonbrass.com

VRTRO454523

45.5" Solid Surface White Stone Freestanding Tub with Pop-UP Drain

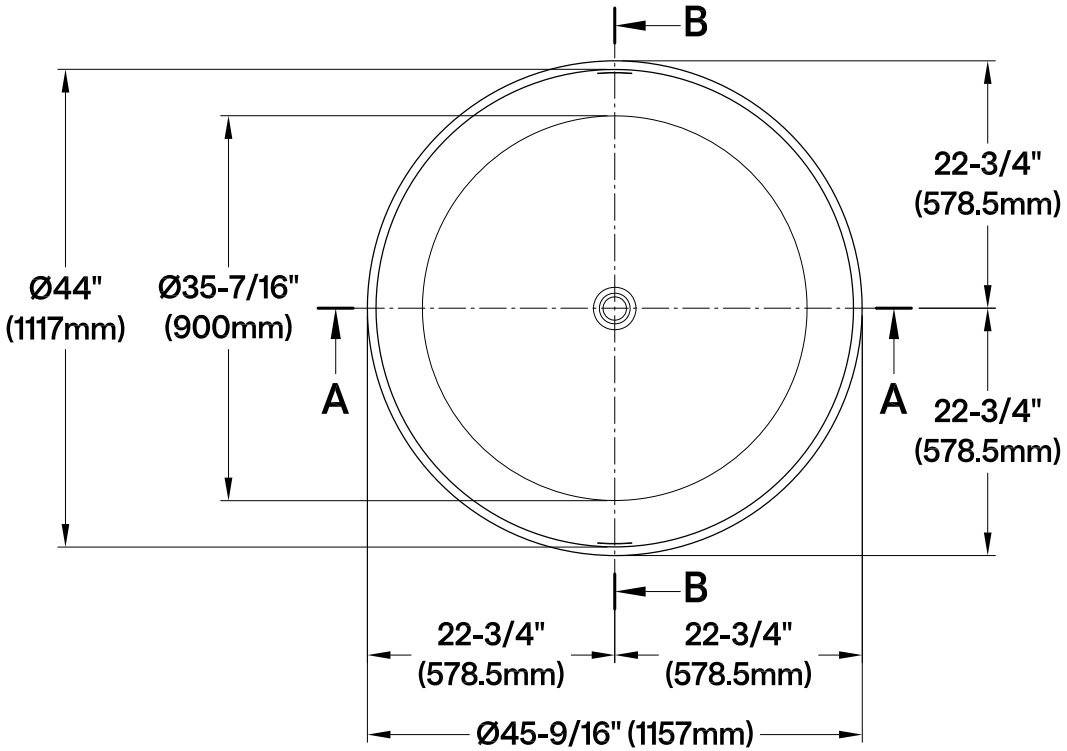

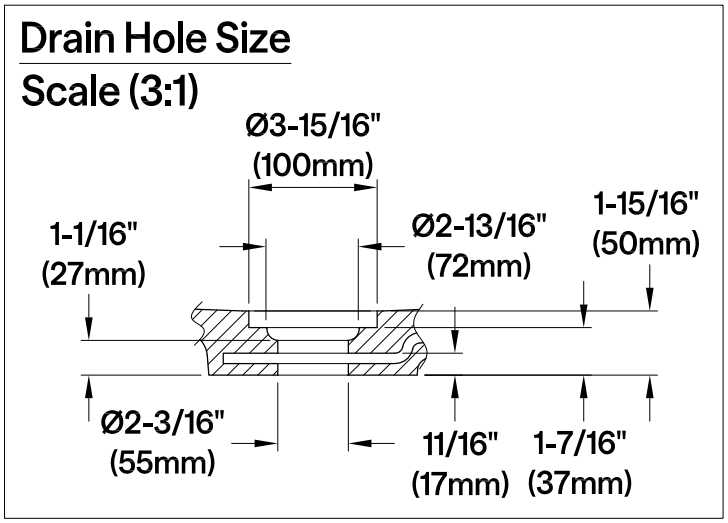

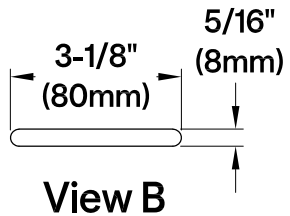

View B
SCALE (5:1)

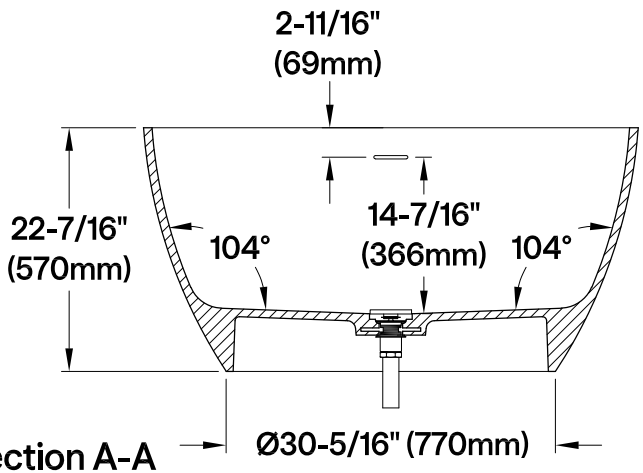

Section A-A

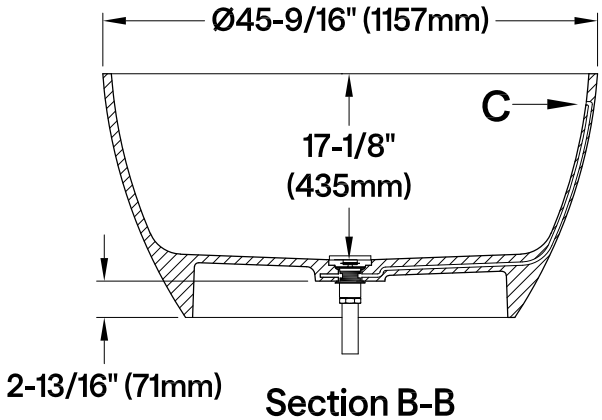

Section B-B