KINGSTON

TO ORDER PARTS, CALL: 1-877-252-7277
www.kingstonbrass.com

KS228MB,C,PB,AB,ORB,PN,SB,SN

Deck Mount Tub Filler with Hand Shower

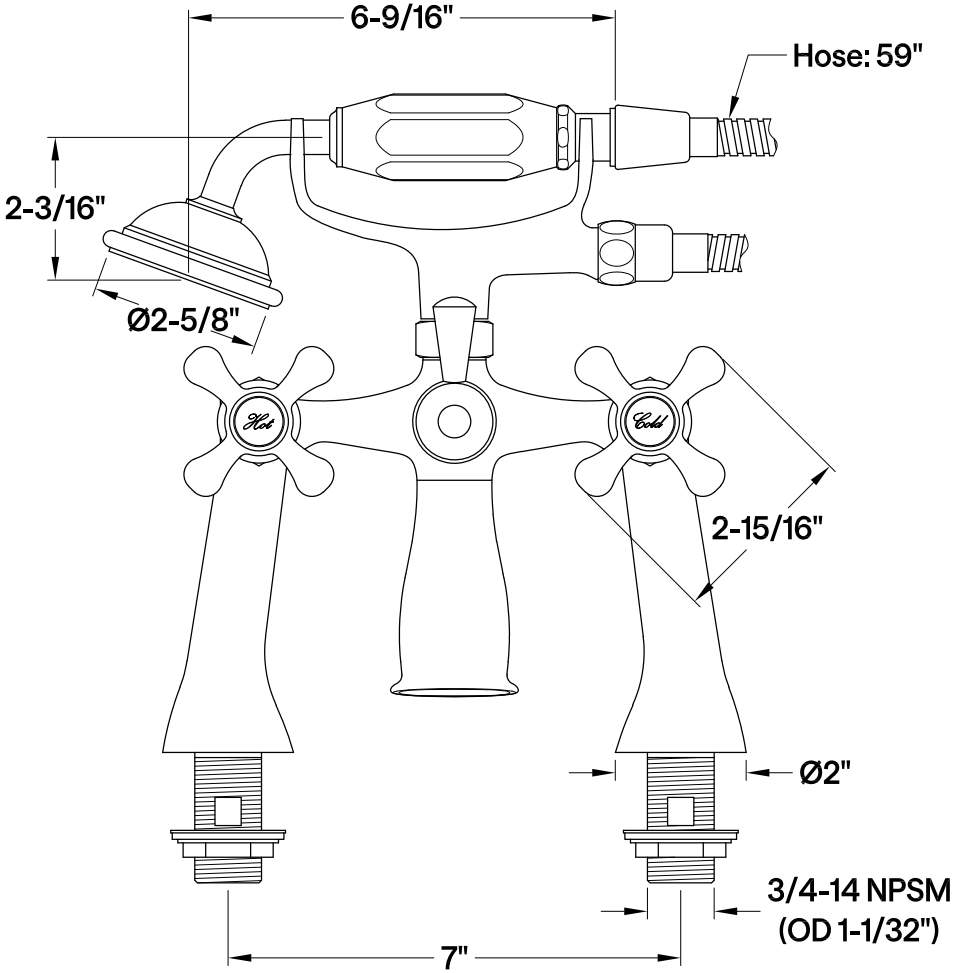

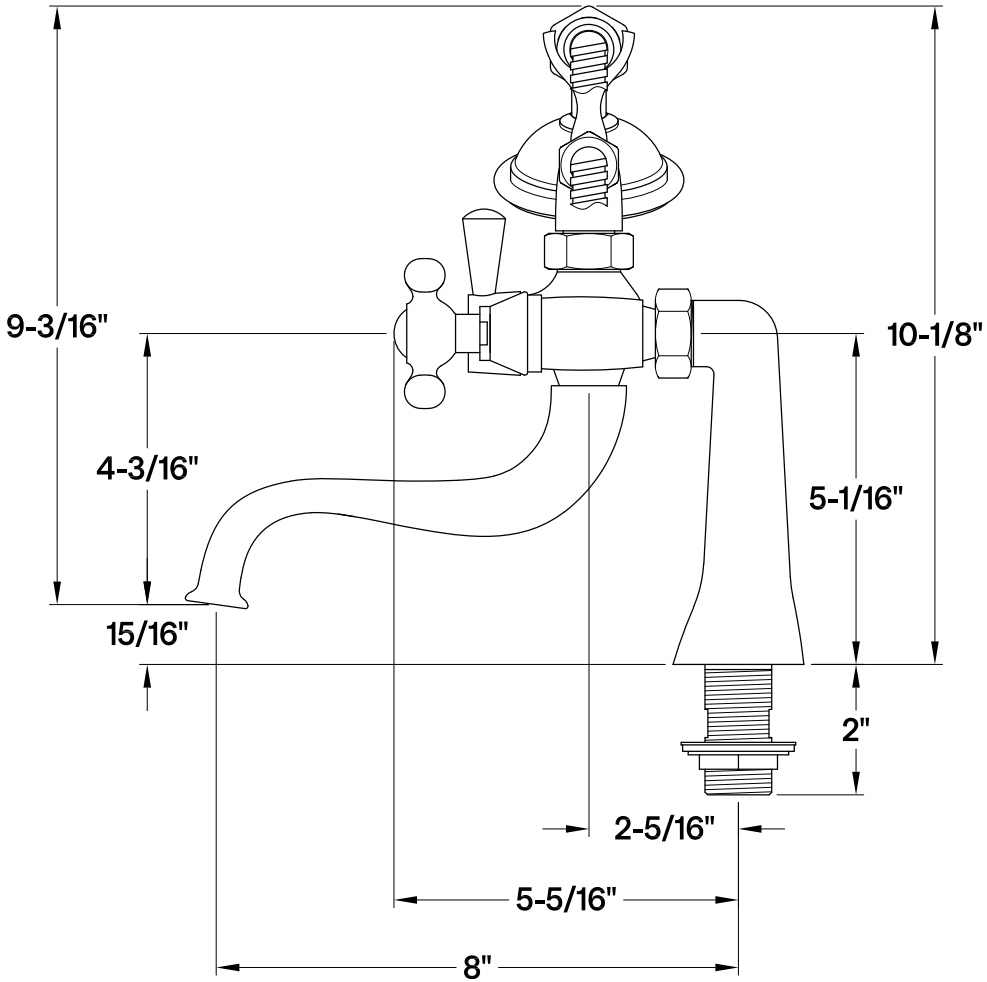

2026-01-A