REVISION HISTORY				
ZONE	REV	DESCRIPTION	DATE	APPROVED
All	1	Released	2/8/2018	ATK
All	2	Updated Views, "Includes" List	2/6/2020	CAH

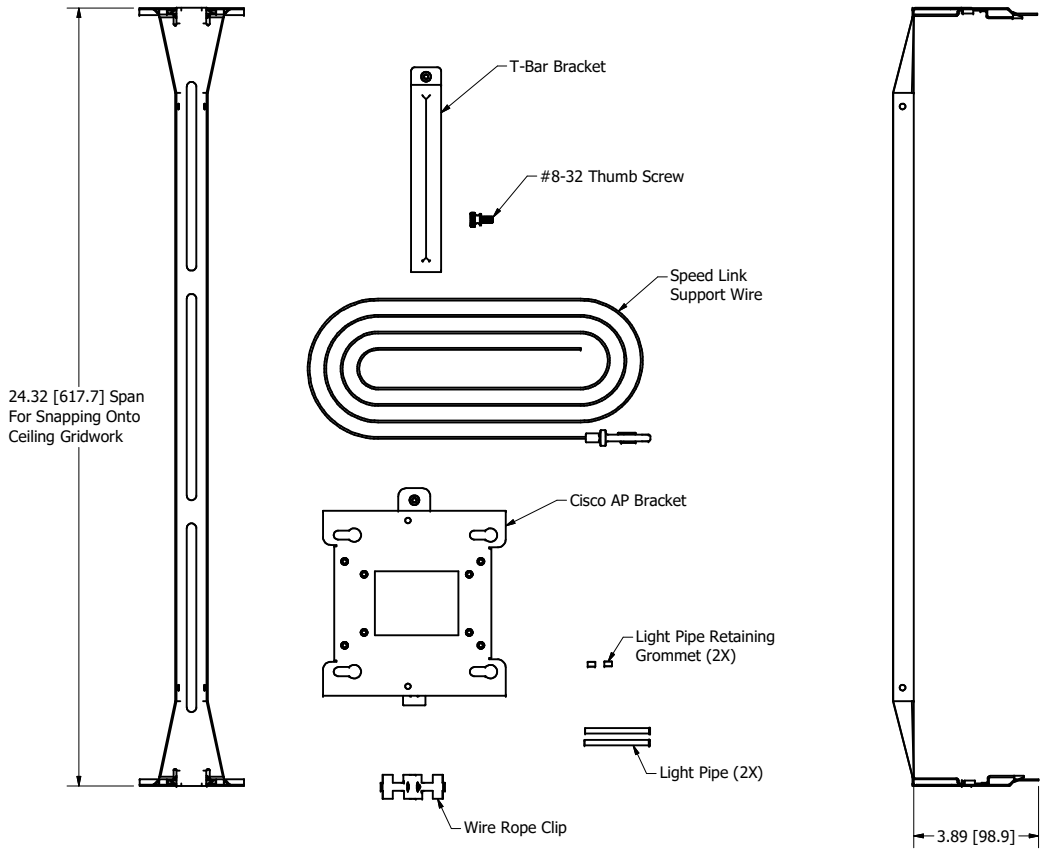

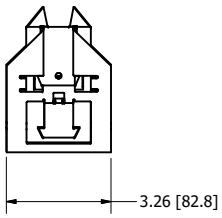

NOTES:
- Weight: 3 lbs.
- Material: 20 Ga. Galvanized Steel

Includes:
- *(1) Tile Bridge with Extensions*
- *(1) T-bar Mounting Bracket*
- *(1) Cisco Mounting Bracket*
- *(1) Wire Rope Clip*
- *(1) Speed Link Support Wire*
- *(1) #8-32 Thumb Screw*
- *(2) Light Pipes*
- *(2) Light Pipe Retaining Grommets*

NOTE: All materials used in the construction of Oberon products must be RoHS compliant and meet RoHS2 Directive 2011/65/EU. Contact Oberon engineering if RoHS compliant materials are not available.

DRAWN CAH	2/7/2020	Oberon, Inc. - 1315 S. Allen St. - State College, PA 16801
CHECKED CAH	2/7/2020	TITLE
QA		Model 1045-00
MFG CAH	2/7/2020	
APPROVED CAH	2/7/2020	SIZE C / DWG NO 1045-00 / REV 2
TOLERANCE: .0 = +/- .030, .00 = +/- .015, .000 = +/- .005		SCALE / SHEET 1 OF 1