IQ Dimmer-PG (3 way) Installation Guide

Safety information

⚠ **WARNING:**

- Only qualified professionals must handle electrical wiring and devices.
- Install and use this product in accordance with applicable electrical codes and regulations in your region.
- Pull the air gap out of the dimmer before replacing the light.
- The device is designed for indoor use in dry locations only.
- Do not use inductive loads with this device.
- Keep this manual as it contains important technical data, testing, and troubleshooting information which may be useful after installation is complete.
- Do not disassemble the product or attempt to make repairs yourself. Doing so may result in electric shock and void the limited warranty.
- If you require assistance, contact our after-sales services.
- Do not exceed the maximum rated power of this device. For further information, see Specifications.
- The maximum current limit of the device is 1.67 A. Do not exceed the 1.67 A limit, as it may damage the device and cause it no longer function.
- If a direct short is created on the output, the device is damaged and no longer function.
- Make sure to use this product together with a 15 A circuit breaker in the upstream.
- Do not use smart lights and smart bulbs with the IQ Dimmer-PG (3 way).
  Use only dimmable light bulbs.
- Aluminum wiring is not compatible with the IQ Dimmer-PG (3 way). Do not use aluminum wiring when you install the IQ Dimmer-PG (3 way).
- Existing electrical wiring may be different from that illustrated in this guide and must be checked by qualified professionals.

Overview

The IQ Dimmer-PG (3 way) is a wireless smart device that enables you to control your indoor lighting remotely through your control panel. For panels that are compatible with the IQ Dimmer-PG (3 way), see https://bit.ly/3r2jWbI.

D-309731 Rev. 00

2025-05-14

D-309731

Figure 1: Device overview

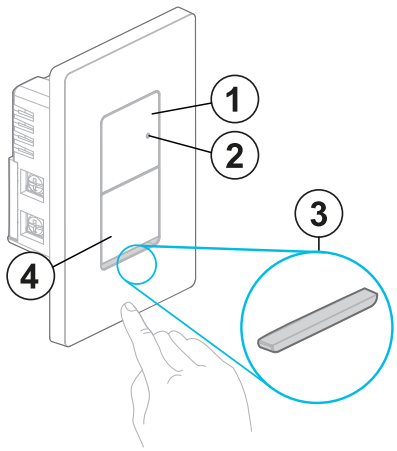

Callout	Description
1	Dim up. For more information, see Device operation.
2	LED indicator
3	Air gap
4	Dim down. For more information, see Device operation.

Compatible panels

For panels that are compatible with the IQ Dimmer-PG (3 way), see https://bit.ly/3r2jWbI.

The IQ Dimmer-PG (3 way) is also compatible with IQ panels in fallback mode, with the limitations reported in the following table.

Panels	Firmware	Limitations
IQ Panel 4, IQ4 Hub, and IQ4 NS	4.5.1	• **Hidden** option not available • OTA update not available
IQ PRO	4.3.0	• **Hidden** option not available • OTA update not available • Local schedule and rules are not supported from **Alarm.Com** app: only Cloud based rules and schedules are supported.

Air gap

The air gap disconnects the power from the dimmer's **Load** terminal.

To disconnect the power from the **Load** terminal, complete the following steps.

1. Remove the faceplate.

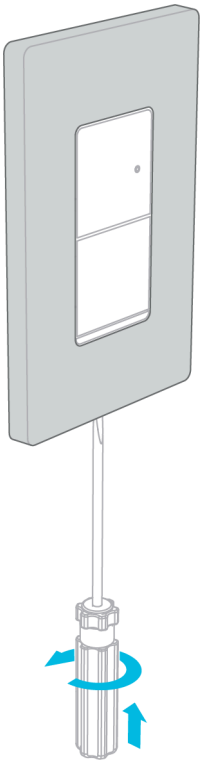

2. Using your fingernail, pull the air gap out of the dimmer.



To reconnect the power on the **Load** terminal, reinsert the air gap into the dimmer.
Reattach the faceplate.

Installing the device

⚠ **WARNING:** Before installing the device, make sure that the electrical supply to the area is turned off. Failure to do so may result in electric shock or serious injury.

⚠ **WARNING:** Before working on the dimmer wiring, pull the air gap out of the dimmer. For more information, see Air gap.

ⓘ **Note:**

- This device uses copper alloys in the terminal. Do not install with aluminum wiring.
- This device requires both line (hot) and neural to operate. If you do not have line (hot) and neutral wires, additional wiring is required.

- The traveler wire connected to the **Traveler** terminal of the IQ Dimmer-PG (3 way) must not exceed 30 m (98 ft).

1. Turn off the power at the circuit breaker.
2. Pull the air gap out of the dimmer.
3. Connect the device as follow:
   a. If you need to control one light from one place, see Controlling one light from one place (single pole operation).
   b. If you need to control one light from two places, see Controlling one light from two places (3-way operation).
   c. If you need to control one light from two places with two IQ Dimmer-PG (3 way), see Controlling one light from two places with two IQ Dimmer-PG (3 way) (3-way operation).
   d. If you need to control one light from three places, see Controlling one light from three places (4-way operation).
4. Mount the device with the screws and attach the faceplate, see Figure 2. If you are using an electric screwdriver, set the torque it to 1.2 Nm of torque to avoid overtightening the screws.

Figure 2: Mounting the device

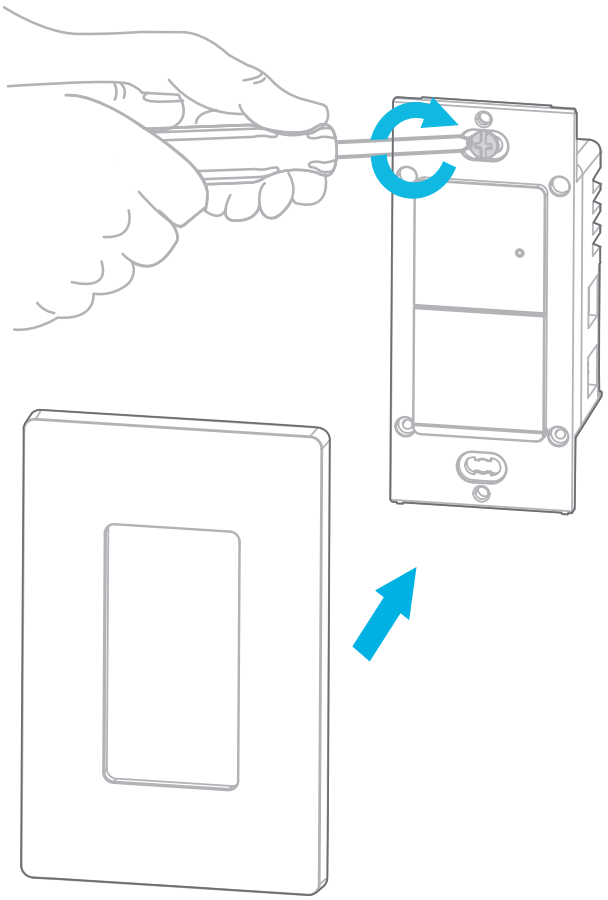

5. Turn power on at the circuit breaker.
6. Reinsert the air gap onto the dimmer.

Controlling one light from one place (single pole operation)

If you need to control one light from one place, see Figure 3 and Figure 4.

⚠ **WARNING:** Before installing the device, make sure that the electrical supply to the area is turned off. Failure to do so may result in electric shock or serious injury.

⚠ **WARNING:** Before working on the dimmer wiring, pull the air gap out of the dimmer. For more information, see Air gap.

Figure 3: Wiring diagram to control one light from one place through the IQ Dimmer-PG (3 way) (single pole operation)

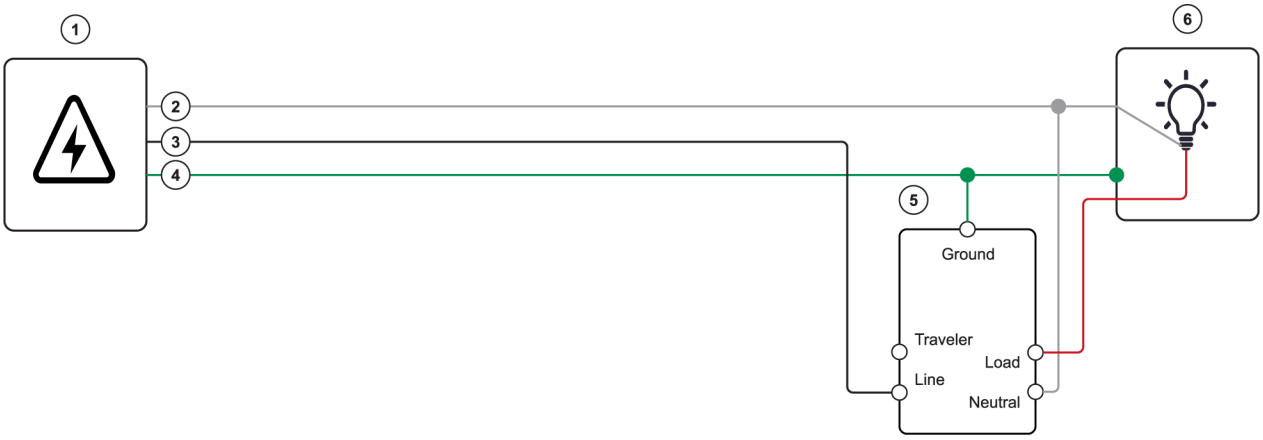

Callout	Description
1	Electrical panel
2	Neutral wire colored white
3	Line (hot) wire colored black
4	Ground wire colored green
5	IQ Dimmer-PG (3 way)
6	Lights

Figure 4: Connecting the IQ Dimmer-PG (3 way) to control one light from one place (single pole operation)

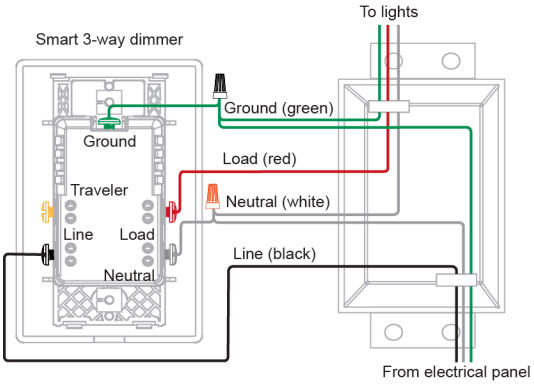

Controlling one light from two places (3-way operation)

If you need to control one light from two places, see Figure 5 and Figure 6.

⚠ **WARNING:** Before installing the device, make sure that the electrical supply to the area is turned off. Failure to do so may result in electric shock or serious injury.

⚠ **WARNING:** Before working on the dimmer wiring, pull the air gap out of the dimmer. For more information, see Air gap.

Figure 5: Wiring diagram to control one light from two places through one IQ Dimmer-PG (3 way) (3-way operation)

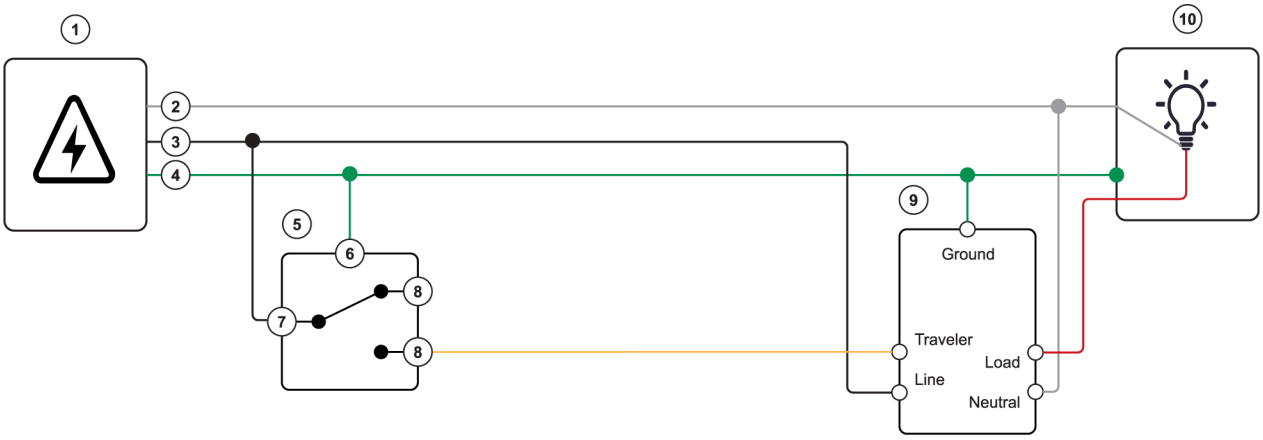

Callout	Description
1	Electrical panel
2	Neutral wire
3	Line (hot) wire
4	Ground wire
5	Traditional 3-way switch
6	Ground terminal
7	Common terminal
8	OUT terminal
9	IQ Dimmer-PG (3 way)
10	Lights

Figure 6: Connecting the IQ Dimmer-PG (3 way) to control one light from two places (3-way operation)

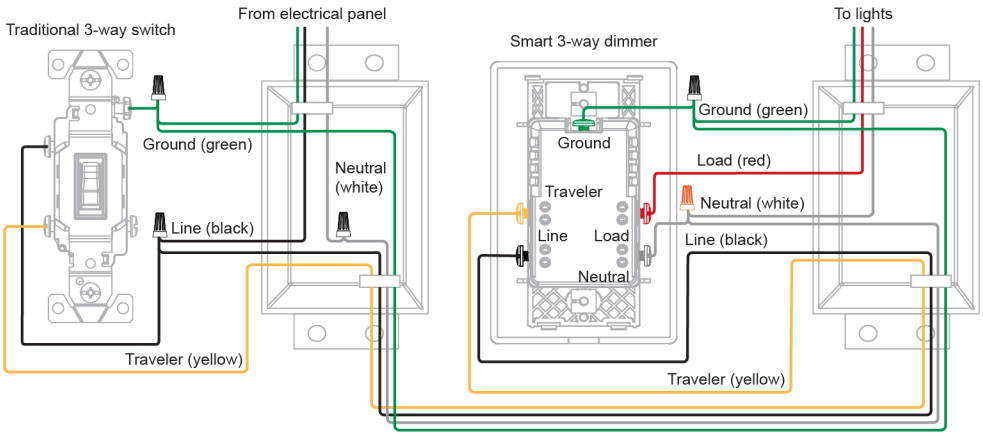

Controlling one light from two places with two IQ Dimmer-PG (3 way) (3-way operation)

If you need to control one light from two places with two IQ Dimmer-PG (3 way), see Figure 7 and Figure 8.

⚠ **WARNING:** Before installing the device, make sure that the electrical supply to the area is turned off. Failure to do so may result in electric shock or serious injury.

⚠ **WARNING:** Before working on the dimmer wiring, pull the air gap out of the dimmer. For more information, see Air gap.

ⓘ **Note:** You must enroll both smart dimmers on the panel.

Figure 7: Wiring diagram to control one light from two places through two IQ Dimmer-PG (3 way) (3-way operation)

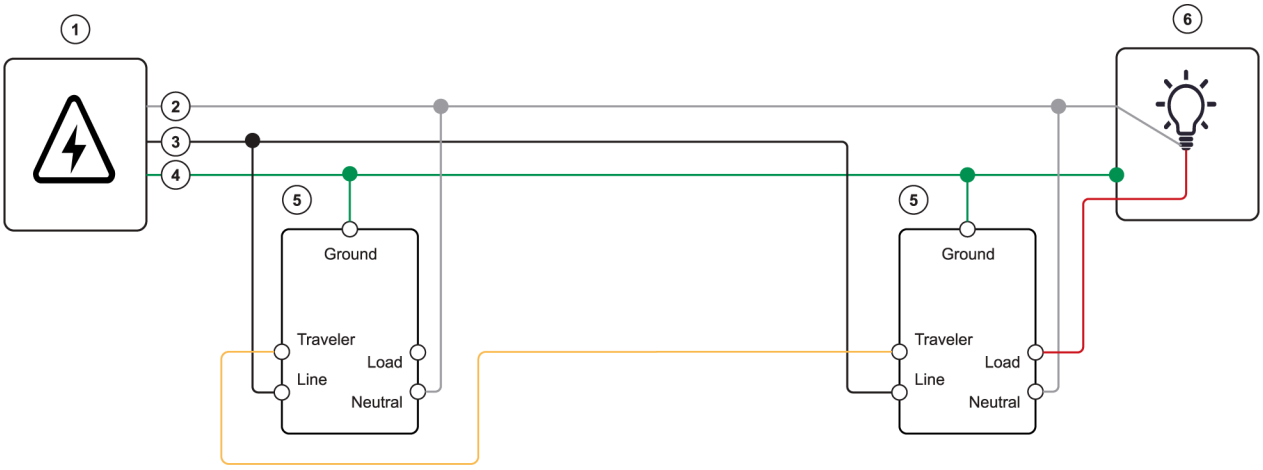

Callout	Description
1	Electrical panel
2	Neutral wire colored white
3	Line (hot) wire colored black
4	Ground wire colored green
5	IQ Dimmer-PG (3 way)
6	Lights

Figure 8: Connecting two IQ Dimmer-PG (3 way) to control one light from two places (3-way operation)

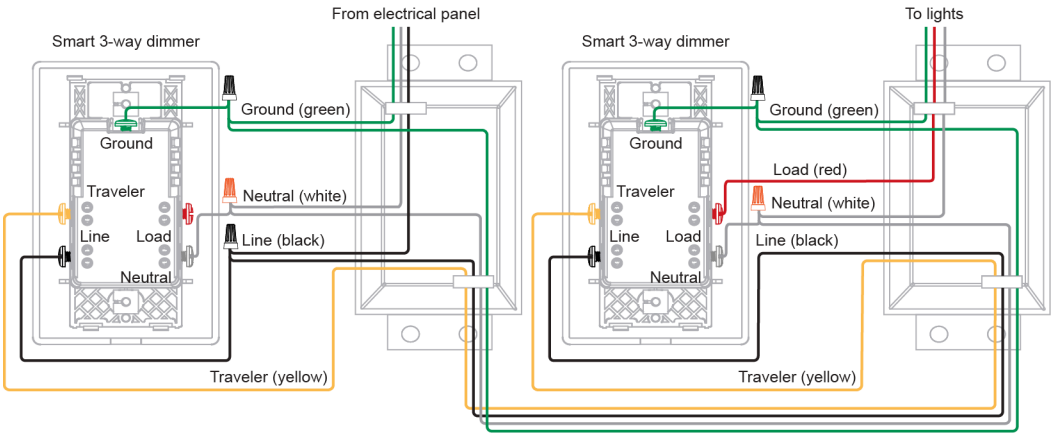

Controlling one light from three places (4-way operation)

If you need to control one light from three places, see Figure 9 and Figure 10.

⚠ **WARNING:** Before installing the device, make sure that the electrical supply to the area is turned off. Failure to do so may result in electric shock or serious injury.

⚠ **WARNING:** Before working on the dimmer wiring, pull the air gap out of the dimmer. For more information, see Air gap.

Note: If traditional dimmers are present in the circuit, the traditional dimmers lose the dimming capabilities and operate only as standard switches.

Figure 9: Wiring diagram to control one light from three places through the IQ Dimmer-PG (3 way) (4-way operation)

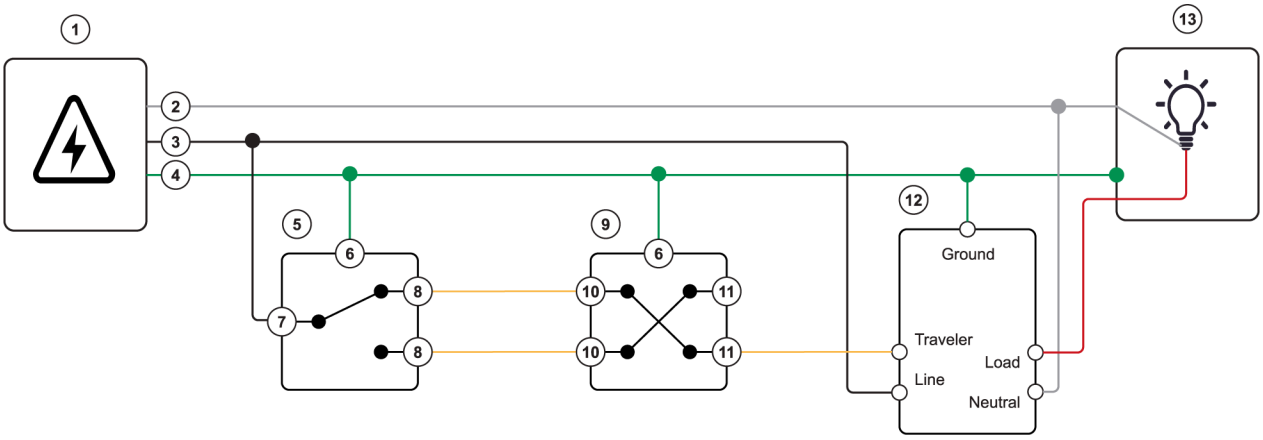

Callout	Description
1	Electrical panel
2	Neutral wire
3	Line (hot) wire
4	Ground wire
5	Traditional 3-way switch
6	Ground terminal
7	Common terminal
8	OUT terminal
9	Traditional 4-way switch
10	IN terminal
11	OUT terminal
12	IQ Dimmer-PG (3 way)
13	Lights

Figure 10: Connecting the IQ Dimmer-PG (3 way) to control one light from three places (4-way operation)

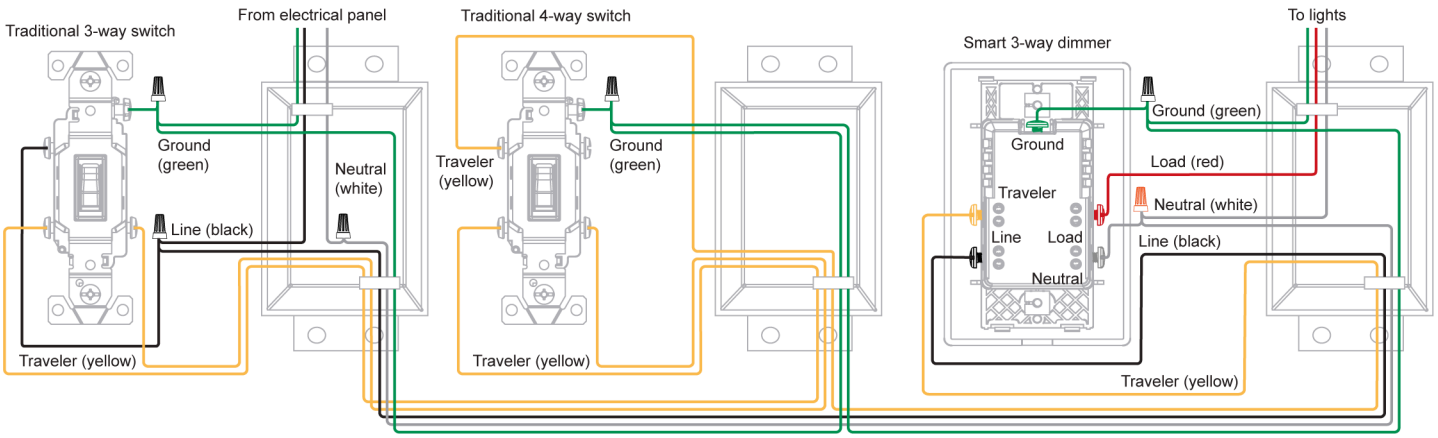

Enrolling the device with Auto Learn Devices

Before you begin:
Ensure power is connected to the device.

To enroll a PowerG device on the IQ panel using the **Auto Learn Devices** feature, complete the following steps.

1. On the IQ panel menu, tap **Settings** > **Advanced Settings**, enter the installer code then tap **Installation** > **Devices** > **Automation Devices** > **Auto Learn Devices**.
2. Press and hold both dim up and dim down buttons on the dimmer for 2 seconds or until the LED indicator turns orange.
3. Release both buttons: the LED turns off. The device enters enrollment mode, and notifies the panel the start of enrollment.
4. When the panel recognizes the device, tap **OK** on the pop-up window that appears. Set the device details in the next configuration pop-up window.
   For more information, see Configuring the device options.
5. **Optional:** Enter the PIN code on the product label for increased security during enrollment. The device does not pair with the panel if you enter an incorrect PIN code.
6. Tap **Pair**.
   The device enrolls successfully and the IQ panel returns to previous menu.

If the device does not automatically enroll, perform a factory reset as indicated in the Resetting the device section.

Enrolling the device with Add PowerG

Before you begin:
Ensure power is not connected to the device.

Use the **Add PowerG** feature to enroll the device on the IQ panel, by entering the device ID or scanning the QR code on the device package.
To enroll the device in the IQ panel using the **Add PowerG** feature, complete the following steps.

1. On the IQ panel menu, tap **Settings** > **Advanced Settings**, enter the installer code then tap **Installation** > **Devices** > **Automation Devices** > **Add PowerG**.
2. Enter the device id in the **Sensor ID** field, or tap **Scan QR Code** and scan the QR code on the device package.
3. Set device details. For more information, see Configuring the device options.
4. **Optional:** Enter the PIN code on the product label for increased security during enrollment. The device does not pair with the panel if you enter an incorrect PIN code.
5. Tap **Pair**.
6. Power on the device.
   The device enrolls successfully.

Considerations when you enroll a device

The following considerations apply when you enroll a PowerG device on the IQ panel, using the **Auto Learn Devices** or **Add PowerG** feature.

- If you keep the buttons pressed after the LED indicator turns off, the device does not enter enrollment mode, and you need to re-initiate the enrollment process.
- If the connection is successful, the PowerG signal strength displays on the device and the enrolled status on the control panel.
  For more information, see Local diagnostic test.
- If the connection fails, a **Not enrolled** status displays on the control panel.

- If you use two smart dimmers to control one light, you must enroll both smart dimmers.

Configuring the device options

Table 1 shows the options that you can configure when enroll the device on the IQ panel.

To change the device option after you enrolled the device, on the IQ panel menu, tap **Settings** > **Advanced Settings** enter the installer code then tap **Installation** > **Devices** > **Automation Devices** > **Edit Device**.

Table 1: Configuration options

Option	Description
Activation LED	Sets the LED indicator operation mode. • **Enabled**: Green LED on when the load is on. LED off when the load is off. • **Disabled**: The LED indicator is always off. ⓘ **Note:** Local diagnostic test, and activation of the delay off timer, overrides this set up. • **Always Enabled**: Green LED on when AC is present. LED off when AC is absent. This mode allows to find the device location in the dark. Optional settings: **Enabled** (default), **Disabled**, and **Always Enabled**.
Automation	Sets the time that the device's load switches on and off automatically. • **None**: Automation is disabled • **Evening**: The device's load switches on at 7 PM and switches off at 11 PM • **Night**: The device's load switches on at 11 PM and switches off at 6 AM of next day Optional settings: **None** (default), **Evening**, and **Night**.
Delay	Sets the delay off timer. Optional settings: **0 Minutes** (disabled), and **1 Minutes** to **30 Minutes**. Default: **5 Minutes**.
Hidden	Allows to hidden the device when you have another device that control the same light. Optional settings: **No** (default), and **Yes**.

Local diagnostic test

After power-up the device automatically enters Test Mode for 15 minutes.

In Test Mode the device shows the strength of the PowerG signal, each time you press the device button.

The following table displays the received signal strength indication.

Table 2: Signal strength indication

LED response	Reception
Green LED blinks	Strong
Yellow LED blinks	Good
Red LED blinks	Poor
No blinks	No communication

➤ **Important:** Reliable reception must be assured. Therefore, poor signal strength is not acceptable. If you receive a poor signal from the device, relocate it and re-test until a strong signal strength is received.

ⓘ **Note:** It is recommended to have a strong signal strength and you must verify the signal strength using the control panel's diagnostic test. For detailed Diagnostics Test instructions, refer to the control panel installer guide.

Checking the PowerG signal strength of the device

To check the PowerG signal strength of a PowerG device on the IQ panel, complete the following steps.

1. Ensure that the device is powered on.
2. On the IQ panel menu, tap **Settings** > **Advanced Settings**, enter the installer code then tap **System Tests** > **PowerG Test** > **Run**.

LED indicator

The information displayed by the LED indicator depends on the **Activation LED** option. For more information, see Configuring the device options.

Note: When you power up the device, the LED indicator displays the PowerG signal strength for 15 minutes. For more information, see Local diagnostic test.

Table 3: LED indicator information

LED indicator	Activation LED Enabled	Activation LED Disabled	Activation LED Always Enabled
Steady green	The light is on	Not applicable	AC power is present
Off	The light is off	Not applicable	AC power is absent
Three orange blinks	Delay off timer activated. For more information, see Device operation.		
Green blinks	Light reaches 100% of brightness		

Device operation

Table 4: Device operation

Action	Initial status	Function
Short press the dim down button	Light on	Turns the light off
	Light off	Keeps the light off
Short press the dim up button	Light on	Keeps the light on
	Light off and previous brightness more than 0%	Turns the light on to previous brightness
	Light off and latest brightness is 0%	Turns the light on to 100% brightness
Long press the dim up button	Light off	Turns the light on to previous brightness, and increases the brightness of 20% each second: the LED indicator blinks green when the brightness reaches 100%.
	Light on and brightness less than 100%	Increases brightness of 20% each second: the LED indicator blinks green when the brightness reaches 100%.
	Light on and brightness is 100%	Keeps the 100% brightness: the LED indicator blinks green
Long press the dim down button	Light on	Decreases brightness of 20% each second
	Light off	Keeps the light off

Table 4: Device operation

Action	Initial status	Function
Double press the dim down button	Light on	Turns the light off after the delay off timer expires: the preset is 5 minutes. For more information, see Configuring the device options. ⓘ **Note:** It applies the delay off timer of the device where you performed the action.
Short press the dim down button	Delay off timer in progress	Cancels the delay off timer, and turns the light off
Long press the dim down button	Delay off timer in progress	Cancels the delay off timer, and decreases brightness of 20% each second
Short press the dim up button	Delay off timer in progress	Cancels the delay off timer, and keeps the light on
Long press the dim up button	Delay off timer in progress	Cancels the delay off timer, and increases brightness of 20% each second: the LED indicator blinks green when the brightness reaches 100%.

Additional behavior of the device

Table 5: Additional behavior of the device

Event	Behavior
Control the light on or off using the built-in buttons	The IQ Panel updates the status in 10 seconds
When you enroll the device	The IQ Panel enrolls the device as a PowerG device
When you remove power from the device	The IQ panel updates the device status to unreachable in 14 minutes
When you restore power to the device	The IQ panel automatically updates the device status to normal in 5 minutes
When the device loses and then restores the communication with the panel	The IQ panel updates the device status to normal in 5 minutes

Resetting the device

1. Press and hold both device buttons for at least 2 seconds. The LED indicator turns orange to indicate a long press.
2. Release briefly and press and hold both device buttons again for 5 seconds until the LED turns red and flashes 3 times to indicate a back to factory default reset.

ⓘ **Note:** After you reset a device back to factory default, you must delete it from the panel and re-enroll the device.

Replacing the light

⚠ **WARNING:** To make sure that there is no AC voltage on the light holder, pull the air gap out of the dimmer. For more information, see Air gap.

⚠ **WARNING:** If two dimmers control the light, pull the air gap out from both dimmers.

Troubleshooting

⚠ **WARNING:** You must meet the applicable electrical codes and regulations in your region when you change the wiring.

⚠ **WARNING:** Only a service person can change electrical wiring.

The panel displays the Main Processor Communication Trouble message

Ensure you have correctly connected all electrical wires to the device.

The panel displays the Unreachable message

- The device has no AC power. Check the electrical wires and ensure power is supplied correctly to the device.
- The device has no connection to the panel.
  - Check that installation environment has not changed.
  - Check that PowerG signal strength is **Strong** or **Good**. If it is **Poor** or **No Signal**, consider using a PowerG repeater.
  - Contact the dealer or tech support.

The panel displays the Not Networked message

You may have not enrolled correctly the device using the **Add PowerG** feature. Check that you entered the correct **Sensor ID**, and **PIN**, if used.

Light does not dim, has poor dimming range, flicks, or buzzes

The light is not compatible with the dimmer. Check with the light manufacturer to ensure that it is compatible with dimmers.

Light flickering

- Light has a bad connection.
- Wires need to be secured firmly under terminal screws of the IQ Dimmer-PG (3 way).

Light does not turn on and LED indicator does not turn on

- Check if circuit breaker or fuse has tripped.
- Check if the light is burned out or if the light neutral connection is wired correctly.

You can power on the Light but LED indicator does not turn on

- The IQ Dimmer-PG (3 way) is not configured.
- Reset the IQ Dimmer-PG (3 way) and re-enroll on the panel.

Unable to control the light remotely

Check if the IQ Dimmer-PG (3 way) is enrolled on the panel and ensure the wiring is correct.

Specifications

Frequency range	912-919 MHz
Communication protocol	PowerG
Power supply	120 V at 60 Hz
Standby power consumption	<1 W
Maximum load power	Incandescent 200 W, CFL and LED 100 W
Maximum load current	1.67 A
Operating humidity	0 to 85%, non condensing
Operating temperature	0°C to 40°C (32°F to 104°F)
Storage temperature	-20°C to 60°C (-4°F to 140°F)
Wiring	Terminal block connection, wire gauge from 16 AWG to 10 AWG
Dimensions (L x W x H)	116.84 mm x 72.9 mm x 41.91 mm (4.6 in. x 2.87 in. x 1.65 in.)
Weight	137 g (4.83 oz)

Compliance with standards

IQ Dimmer-PG (3 way) complies with the following standards:

IQDMR3W-PG	**FCC (912 to 919 MHz)**: 47CFR part 15 **ISED Canada (912 to 919 MHz)**: ICES-003 **ETL**: UL 1472:2015 Ed.2+R:31July2020 **CSA**: C22.2 No.184.1:2015 Ed.2+U1;U2

Supplier's Declaration of Conformity

The product's electromagnetic radiated emissions have been tested to conform to the applicable FCC Rules and Regulations: **FCC 47 CFR Part 15: Subpart B**.

The test results have been evaluated by **UL Verification Services (Guangzhou) Co., Ltd., Song Shan Lake Branch** laboratory and are covered in the test report No.: **4791354481-6-EMC-1 and 4791354481-1**.

Responsible Party – U.S. Contact Information

Qolsys Inc. (Johnson Controls) – 1919 S Bascom Ave., Suite 600 – Campbell, CA – 95008 USA – Phone: (408) 857-8415 – Website: https://www.qolsys.com

FCC and ISED Canada compliance statement

This device complies with FCC Rules Part 15 and with ISED Canada license-exempt RSS standard(s).

Operation is subject to two conditions:

(1) This device may not cause harmful interference, and (2) this device must accept any interference that may be received or that may cause undesired operation.

Le présent appareil est conforme aux CNR d'ISED Canada applicables aux appareils radio exempts de licence. L'exploitation est autorisée aux deux conditions suivantes:

(1) l'appareil ne doit pas produire de brouillage, et (2) l'utilisateur de l'appareil doit accepter tout brouillage radioélectrique subi, même si le brouillage est susceptible d'en compromettre le fonctionnement.

To comply with FCC Section 1.1310 for human exposure to radio frequency electromagnetic fields and ISED Canada requirements, implement the following instruction:

A distance of at least 20 cm between the equipment and all persons should be maintained during the operation of the equipment.

Le dispositif doit être placé à une distance d'au moins 20 cm à partir de toutes les personnes au cours de son fonctionnement normal. Les antennes utilisées pour ce produit ne doivent pas être situés ou exploités conjointement avec une autre antenne ou transmetteur.

ⓘ **Note:** This equipment has been tested and found to comply with the limits for a Class B digital device, pursuant to part 15 of the FCC Rules. These limits are designed to provide reasonable protection against harmful interference in a residential installation. This equipment generates, uses and can radiate radio frequency energy and, if not installed and used in accordance with the instructions, may cause harmful interference to radio communications. However, there is no guarantee that interference will not occur in a particular installation. If this equipment does cause harmful interference to radio or television reception, which can be determined by turning the equipment off and on, the user is encouraged to try to correct the interference by one or more of the following measures:

- Reorient or relocate the receiving antenna.
- Increase the separation between the equipment and receiver.
- Connect the equipment into an outlet on a circuit different from that to which the receiver is connected.
- Consult the dealer or an experienced radio/TV technician for help.

This Class B digital apparatus complies with Canadian ICES-003.

Cet appareil numerique de la classe B est conforme a la norme NMB-003 du Canada.

Contains FCC ID: 2AB2Q-1312PSIP and IC: 10256A-1312PSIP

⚠ **WARNING:** Changes or modifications to this equipment not expressly approved by the party responsible for compliance (DSC) could void the user's authority to operate the equipment.

UL/ULC notes

The IQ Dimmer-PG (3 way) has been listed by ETL for home automation applications in accordance with the requirements in the Standards UL 1472:2015 Ed.2+R:31 July 2020 for contacts and dimmers. Use this device only in conjunction with compatible wireless receivers. After installation, verify the product functionality with the compatible receiver used.

CAUTION:

a) TO REDUCE THE RISK OF OVERHEATING AND POSSIBLE DAMAGE TO OTHER EQUIPMENT, DO NOT INSTALL TO CONTROL A RECEPTACLE, A MOTOR OPERATED APPLIANCE, OR A TRANSFORMER-SUPPLIED APPLIANCE.

GRADATEURS COMMANDANT UN BALLAST–AFIN DE REDUIRE LE RISQUE DE SURCHAUFFE ET LA POSSIBILITE D'ENDOMMAGEMENT A D'AUTRES MATERIELS, NE PAS INSTALLER POUR COMMANDER UNE PRISE, UN APPAREIL A MOTEUR OU UN APPAREIL ALIMENTE PAR UN TRANSFORMATEUR.

b) TO REDUCE THE RISK OF OVERHEATING AND POSSIBLE DAMAGE TO OTHER EQUIPMENT, DO NOT INSTALL TO CONTROL A RECEPTACLE, A MOTOR OPERATED APPLIANCE, A FLUORESCENT LIGHTING FIXTURE, OR A TRANSFORMER-SUPPLIED APPLIANCE.

GRADATEURS COMMANDANT UNE LAMPE A FILAMENT DE TUNGSTENE–AFIN DE REDUIRE LE RISQUE DE SURCHAUFFE ET LA POSSIBILITE D'ENDOMMAGEMENT A D'AUTRES MATERIELS, NE PAS INSTALLER POUR COMMANDER UNE PRISE, UN APPAREIL A MOTEUR, UNE LAMPEFLUORESCENTE OU UN APPAREIL ALIMENTE PAR UN TRANSFORMATEUR.

Safety instructions

Read the safety information before you install the equipment.

The equipment shall be installed and used within an environment that provides the pollution degree max 2 and over voltages category II in non-hazardous locations, indoor only.

The equipment is designed to be installed by SERVICE PERSONS only; (SERVICE PERSON is defined as a person having the appropriate technical training and experience necessary to be aware of hazards to which that person may be exposed in performing a task and of measures to minimize the risks to that person or other persons).

This equipment is to be installed or used in accordance with local electrical codes and regulations. The equipment is to be installed in an indoor dry location. Exposure to weather or corrosive conditions may damage the equipment.

Limited Warranty and EULA

To view Warranty and EULA information, access the link https://bit.ly/3r2jWbI or scan the following QR code:

Technical support

Intrusion Tech support: +1- 855-476-5797 #2 or 1-800-387-3630

29011354R001

©2025 Johnson Controls. All rights reserved. JOHNSON CONTROLS, TYCO and DSC are trademarks and/or registered trademarks. Unauthorized use is strictly prohibited.