Parts:

Replacement Parts:

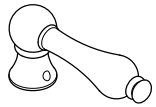

Handle: KTHAL1

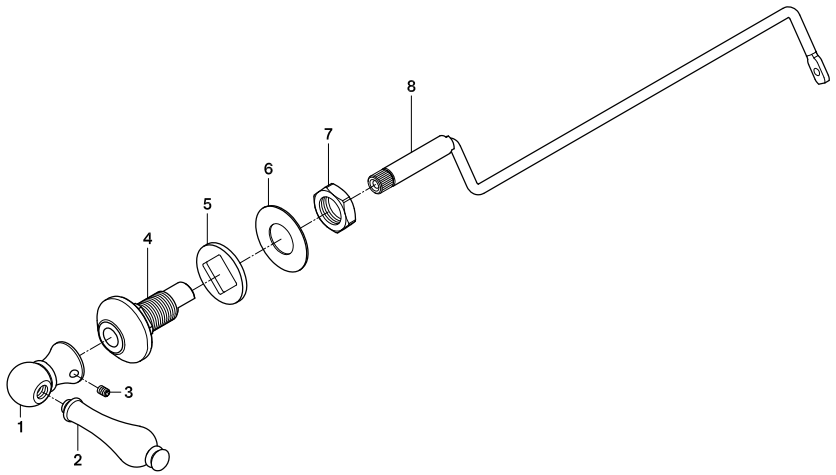

KINGSTON

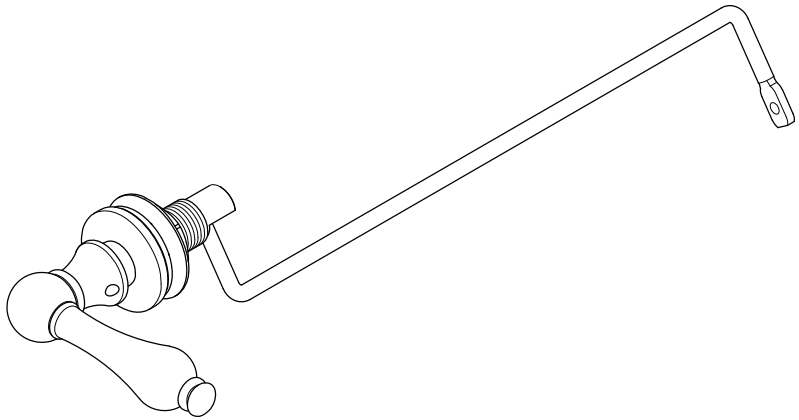

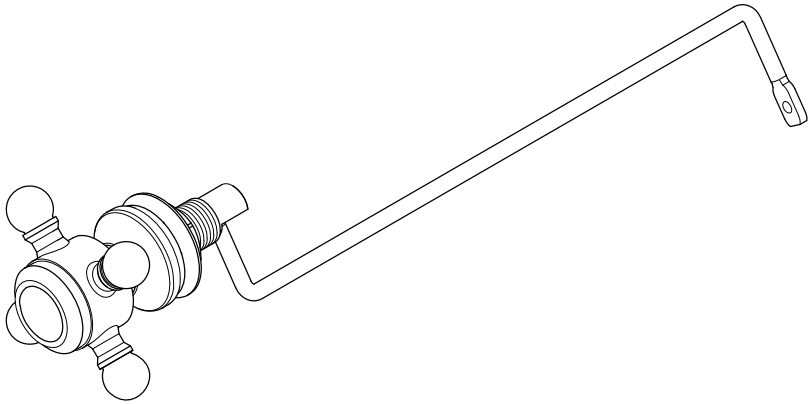

www.kingstonbrass.com

TOLL-FREE CUSTOMER SERVICE: 1-877-2-KBRASS
TECHNICAL SUPPORT E-mail: service@kingstonbrass.com
12775 Reservoir Street, Chino, CA 91710

KINGSTON

INSTALLATION INSTRUCTIONS
Side Mount Tank Lever

Need Tools:

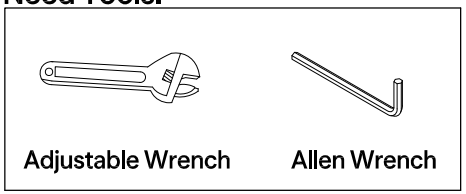

Disassemble Tank Lever :

Removing brass cotter pin from handle assembly end and slide pieces off.

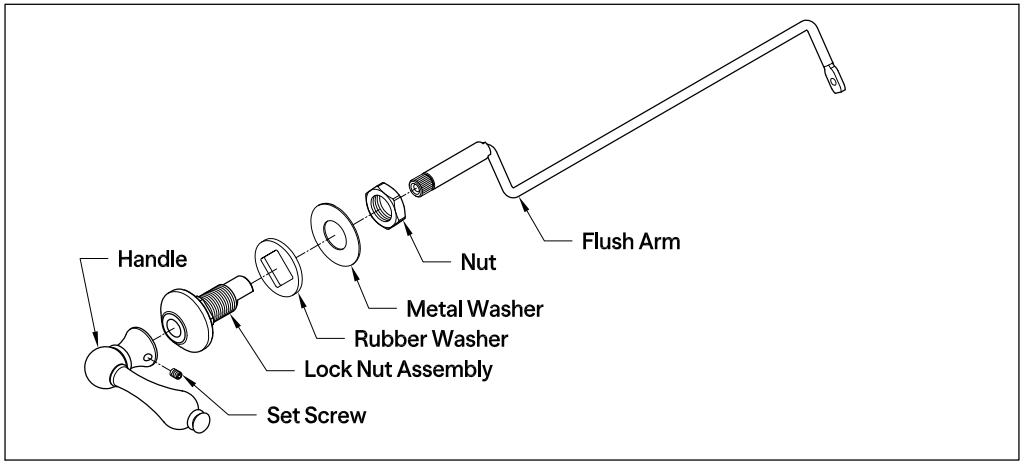

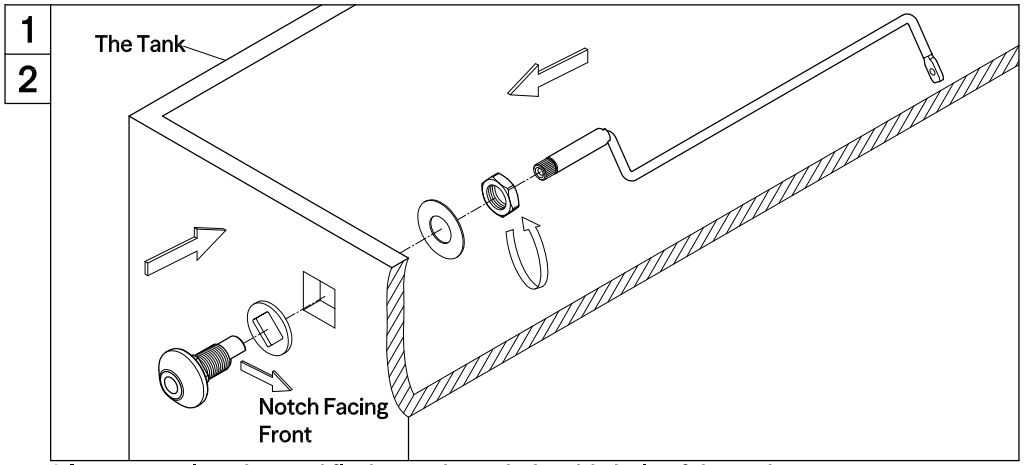

1. Insert metal washer and flush arm through the side hole of the tank.
2. The lock nut assembly notch facing front and assemble the washers and nut on the lock nut assembly, then tighten the nut by hand or adjustable wrench.

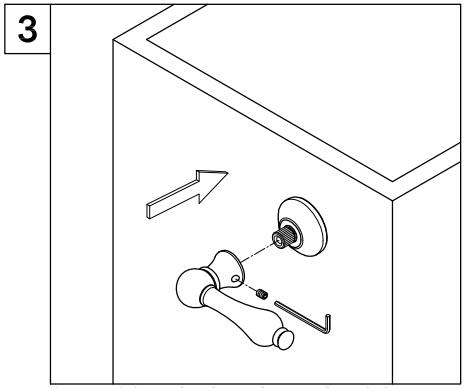

3. Position the handle to the right or left, depending on your preference, and secure it by tightening the set screw on the side of the handle. In some cases, the screw may be located in the center of the handle. Once the handle is secured, attach the decorative handle cap (available on certain models) to the handle.

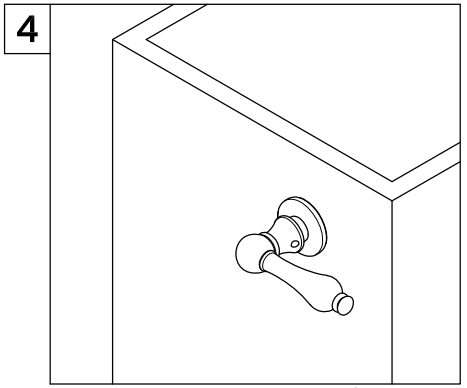

4. Flush arm may be bent to fit individual applications.

* Never use cleaners containing abrasive cleansers, ammonia, bleach, acids, waxes, alcohol, solvents or other products not recommended for chrome. This will void the warranty.

©2025 LVC Kingston LLC. All Rights Reserved.
2025-08-G