KINGSTON

TO ORDER PARTS, CALL: 1-877-252-7277
www.kingstonbrass.com

BA175289SN

18" Towel Bar

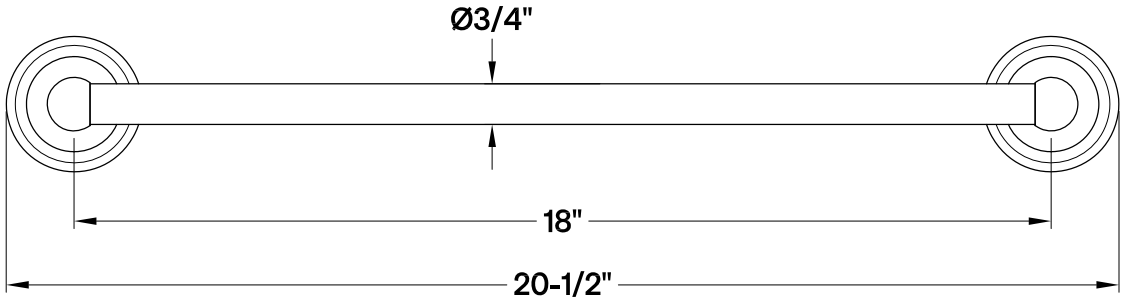

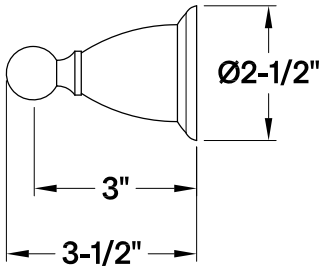

KINGSTON

TO ORDER PARTS, CALL: 1-877-252-7277
www.kingstonbrass.com

BA175289SN
Toilet Paper Holder

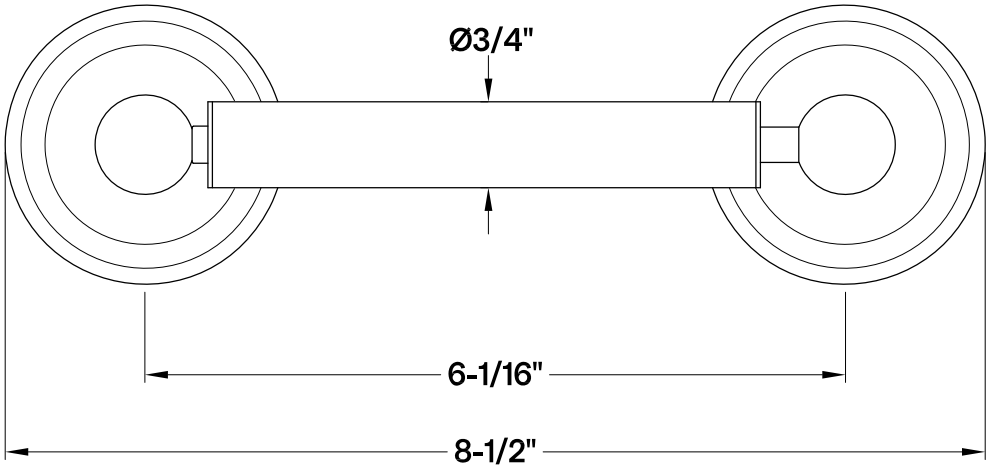

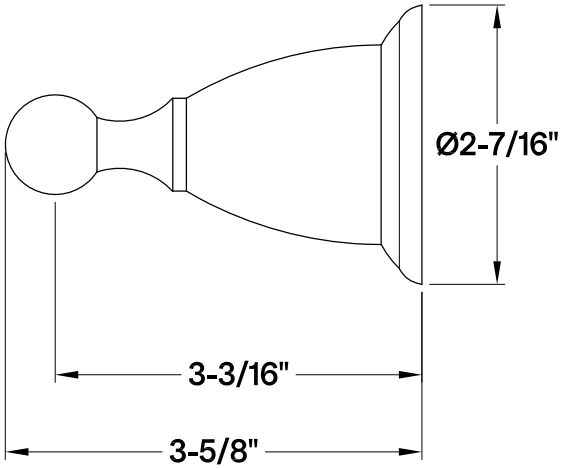

KINGSTON

TO ORDER PARTS, CALL: 1-877-252-7277
www.kingstonbrass.com

BA175289SN

Glass Shelf

