KINGSTON

TO ORDER PARTS, CALL: 1-877-252-7277
www.kingstonbrass.com

# KB5890,1,2,3,7,8DL

## Single Handle Pressure Balanced Tub & Shower Faucet

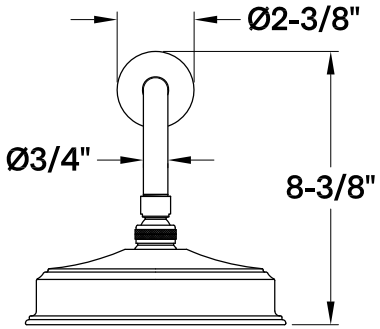


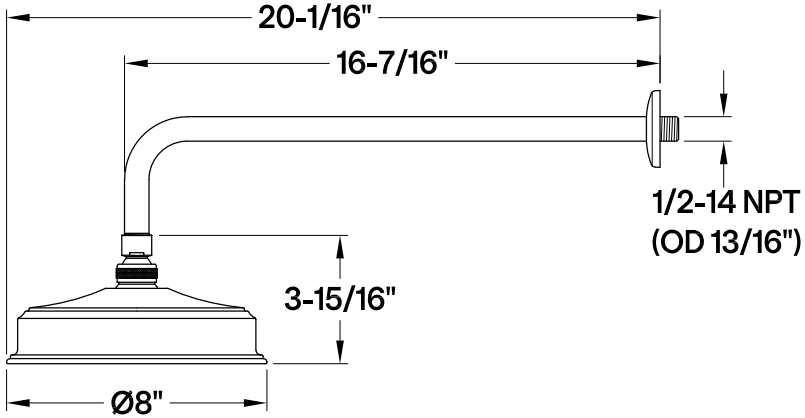


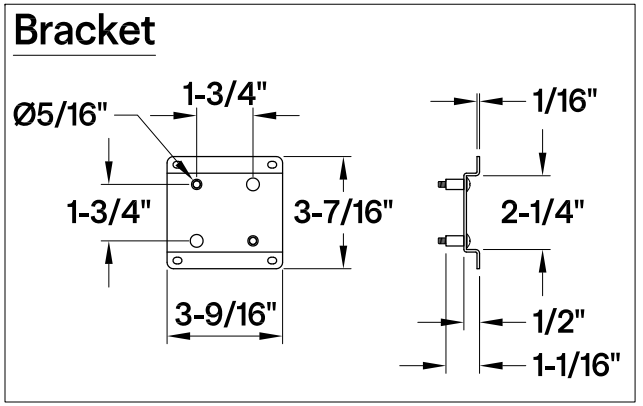


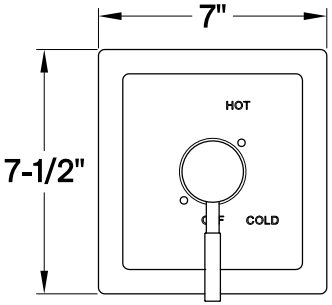


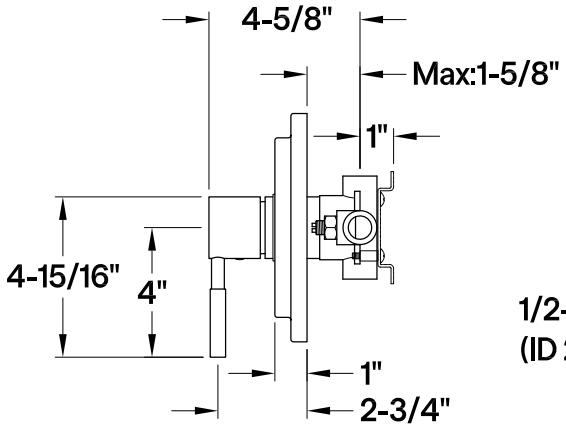


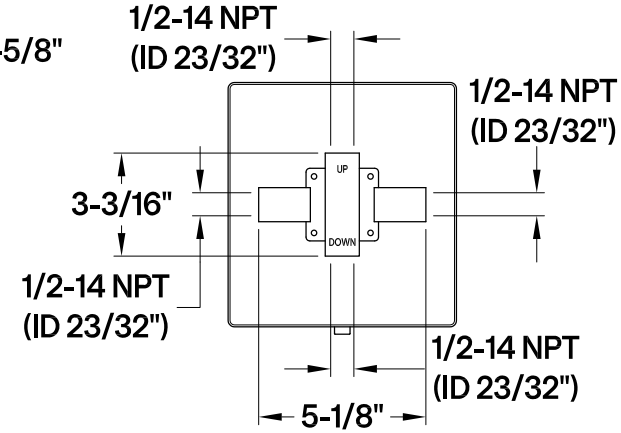


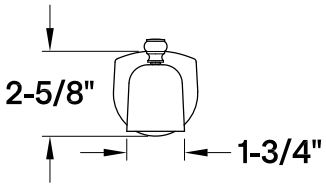


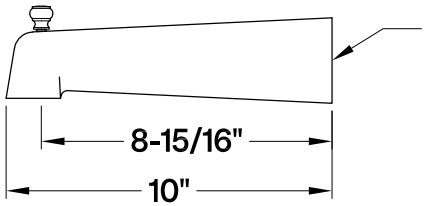


2026-06-C