KINGSTON

Shower Seat Wall Mount Hinged

Installation Instructions

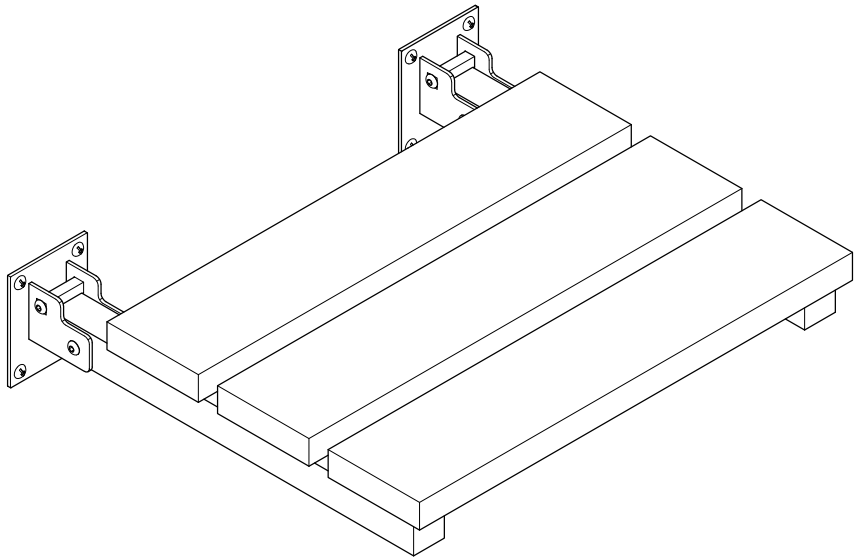

Parts:

Mounting Screw
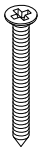
8 Pcs

www.kingstonbrass.com

TOLL-FREE CUSTOMER SERVICE: 1-877-2-KBRASS
TECHNICAL SUPPORT E-mail: service@kingstonbrass.com
12775 Reservoir Street, Chino, CA 91710

⚠CAUTION

Failure to follow all installation directions may cause product to detach from the wall and cause serious injury

Tools Required


Allen Wrench

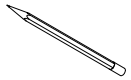
Marking Pencil

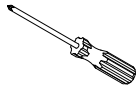
Phillips Screwdriver

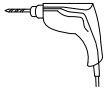
Power Drill

Before Installation:

For your own safety, this seat should be installed by a licensed professional
It is recommended that this seat be properly secured to 2" x 6" piece of lumber or larger as wood bracing.
Weight limit on this seat is 120 kgs (265 lbs) max.

Installation Steps:

Step 1. Locate the desired seating position. To comply with ADA standards, seat should be mounted at a height where the seating surface in its downward position is at a height of 17" to 19" above finished floor. Please check all State and Local code for building requirements.

Step 2. Place seat at its desired location, make sure the seating surface is level, use a pencil to mark the locations for the screw holes from each mounting plate on the wall. Remove the seat after marking the locations of the mounting holes.

Step 3. Drive all the screws in at the marked locations then remove all the screws from the wall.

Step 4. Place seat back and align the mounting plates with the pre-drilled screw holes. Drive in all the screws again to secure the seat firmly on the wall.

Step 5. Make sure that the seat raises and lowers smoothly. If correctly installed, the seat will remain in the upward, closed position on its own, and will require minimal effort to be lowered down to the seating position.

Please Read Disclaimer

The manufacturer or distributor of this product shall not be held liable for installation actions taken or not taken. There are many details of installation that are assumed to be general construction knowledge to experienced installers; which are not included in these instructions. Selection of an experienced installer is the sole responsibility of the home owner or architect.

©2025 LVC Kingston LLC. All Rights Reserved.

2025-05-T

KINGSTON

Wood Fold Down Shower Seat
Care & Maintenance Instruction Guide

Congratulations on your purchase of a high-quality fold down shower seat made from red oak and stainless steel!
To ensure its longevity and maintain its aesthetic appeal, please follow these care and maintenance instructions.

Materials Needed:

- Epoxy-based Sealer
- Urethane/Marine Clear Varnish
- Soft Cloths or Sponges
- Gentle Cleaner (pH-neutral)
- Sandpaper (fine grit)
- Brush or Roller for Application
- Protective Gloves

Initial Care:

1. Cleaning
   Frequency: Clean your shower seat regularly to remove soap scum and moisture.
   Method: Use a gentle cleaner with a soft cloth or sponge. Avoid harsh chemicals that can damage the wood.
   Drying: Always wipe the seat dry after each use to prevent moisture buildup.
2. Sealing the Wood
   To protect the red oak from moisture, it's crucial to apply an epoxy-based sealer.

Steps:

- Sand the Surface: Using a fine grit sandpaper (220+). Lightly sand the surface of the seat to ensure proper adhesion.
- Clean the Dust: Wipe away any dust created by sanding.
- Apply the Epoxy Sealer:
  Wearing gloves, apply the sealer evenly using a brush or roller.
- Allow it to cure according to the manufacturer's instructions.

Finishing Touch:

Applying Urethane/Marine Clear Varnish
Once the epoxy sealer has cured, proceed with applying a urethane or marine clear varnish for added protection.

Steps:

- Preparation: Lightly sand the surface again to create a smooth base.
- Clean Again: Wipe away all dust.
- Varnish Application:
  Apply the varnish liberally using a clean brush or roller.
- Follow the manufacturer's instructions regarding drying times and number of coats. Typically, 2-3 coats are recommended for optimal protection.
- Regular Maintenance.
- Reapply Sealer and Varnish:
  To maintain the beauty and durability of your shower seat, reapply the epoxy sealer and urethane clear varnish every 1 to 2 years.

Inspection:

- Regularly check for signs of wear or damage, especially in areas exposed to water.
- Address any issues immediately to prevent further damage.

Additional Tips:

- Avoid Excessive Water Exposure: While the seat is water-resistant, prolonged exposure should be minimized.
- Use Coasters or Pads: To avoid scratches, especially if placing any items on the seat.
- Temperature Control: Avoid exposing the seat to extreme temperature changes, which can cause the wood to expand or contract.

Conclusion:

- Following these care and maintenance instructions will help ensure the longevity and beauty of your fold down shower seat made from red oak and stainless steel. With proper care, it will be a durable and attractive addition to your bathroom for years to come.

www.kingstonbrass.com

TOLL-FREE CUSTOMER SERVICE: 1-877-2-KBRASS
TECHNICAL SUPPORT E-mail: service@kingstonbrass.com
12775 Reservoir Street, Chino, CA 91710

©2025 LVC Kingston LLC. All Rights Reserved.
2026-02-TD