Parts:

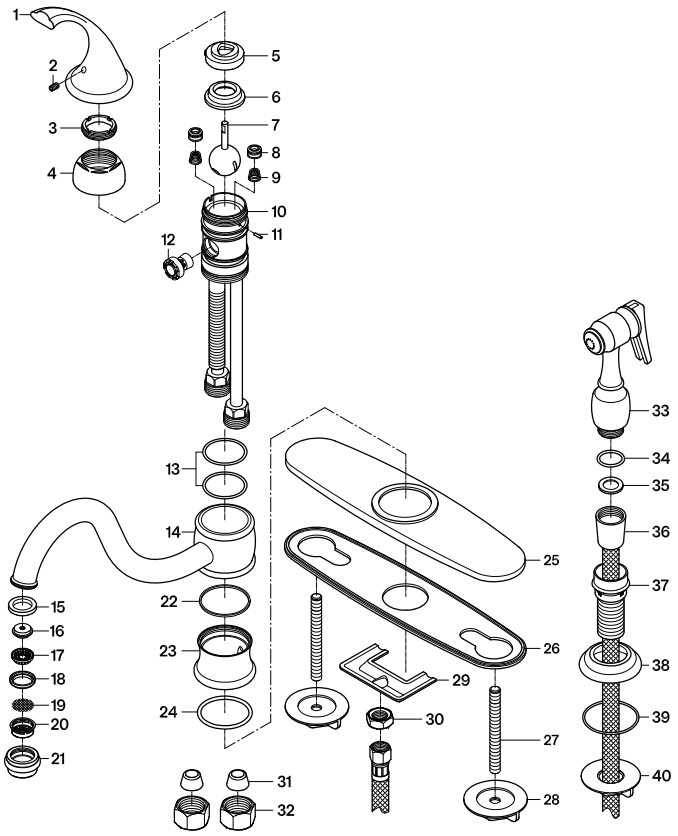

Replacement Parts:

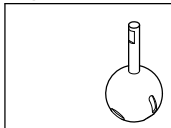

Cartridge: KBRP521C

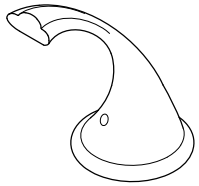

Handle: KBH3401GL

CARE AND MAINTENANCE OF YOUR FAUCET

Your KINGSTON faucet has been finished to the most strict standards; however, due to the high content of minerals in the water, your finish may appear dull and tarnished after time. These are some do's and don'ts to maintain the luster on your faucet for many years to come.

DO
1. Use a silicon based caulking when installing.
2. Clean your faucet with only a mild soap and water solution.
3. Dry your faucet after using it.
4. Give it a coat of Carnauba Wax periodically.

DON'T
1. Use plumbers putty when installing the faucet.
2. Use any abrasive cleaning agents.

It may seem like a very simple and short list but it is that simple to maintain your faucet, looking shiny and new.

If your faucet is already looking somewhat dull and tarnished, before replacing it, try cleaning it with a 50/50 solution of vinegar and water, you may need to soak some rags and wrap around those stubborn areas, leave
overnight and rinse completely in the morning, apply Carnauba wax once you have removed the mineral deposits.

KINGSTON

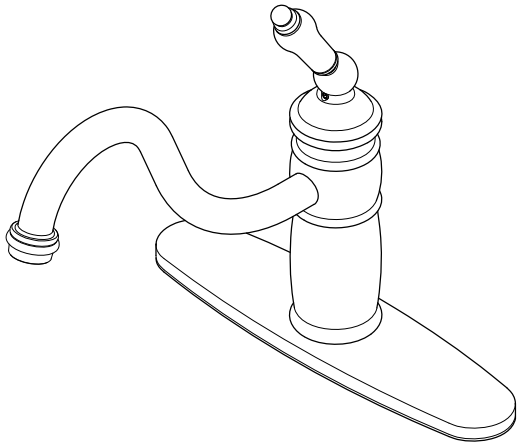

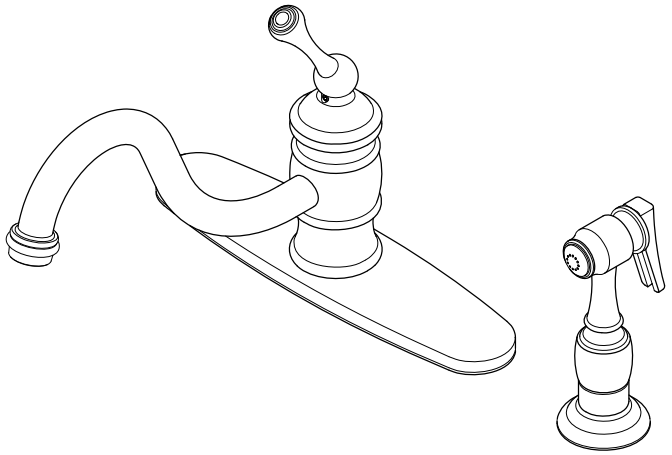

Parts:

Metal Washer & Lock Nut	Cone Washer & Coupling Nut	Bolt & Lock Nut
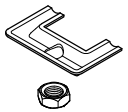	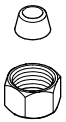	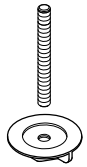
1 Pc	2 Pcs	2 Pcs

www.kingstonbrass.com

TOLL-FREE CUSTOMER SERVICE: 1-877-2-KBRASS
TECHNICAL SUPPORT E-mail: service@kingstonbrass.com
12775 Reservoir Street, Chino, CA 91710

NOTICE

Failure to follow all directions may cause leaks which may result in water damage

KINGSTON

INSTALLATION INSTRUCTIONS
Single Handle Kitchen Faucet with or without Sprayer

BEFORE BEGINNING INSTALLATION:

1. Flush plumbing lines to clear any debris.
2. Shut off both supply lines after flushing.

Need Tools:

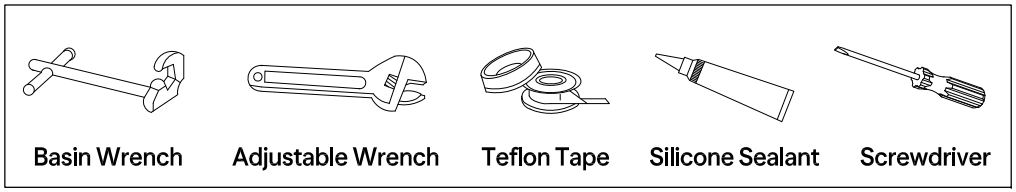

1

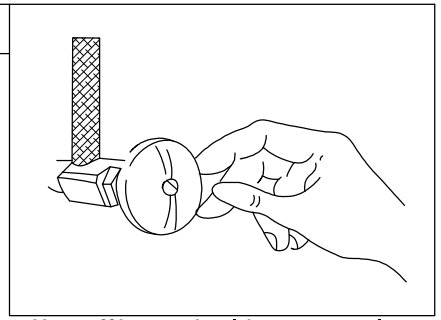

1. Shut off hot and cold water supply under sink. Plug sink drain with cloth to avoid losing small parts.
Remove old faucet.

2

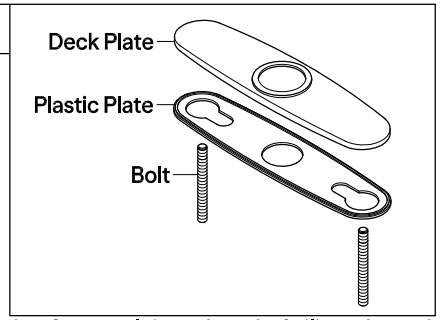

2. After applying a bead of silicon based caulking to the underside of the plastic plate, set at the desired location.

3

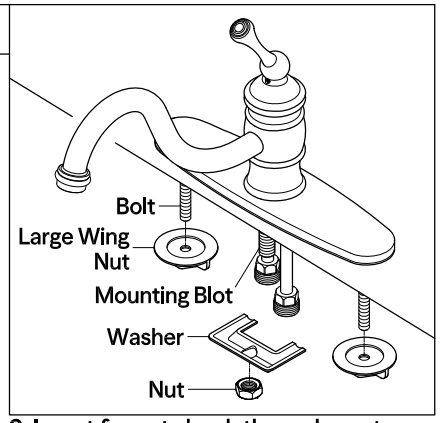

3. Insert faucet shank through center hole and secure by threading large wing nuts on the bolts that secure base plate. From underneath, assemble the washer and lock nut onto the mounting bolt, then tighten the lock nut with a basin wrench.

4

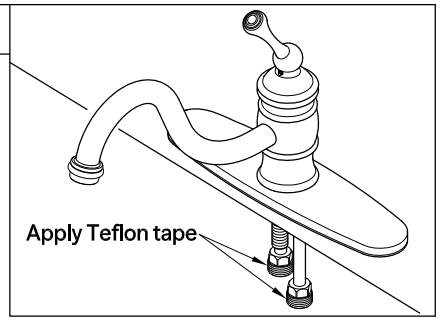

4. Apply Teflon tape to inlet shanks and connect supply lines.

5

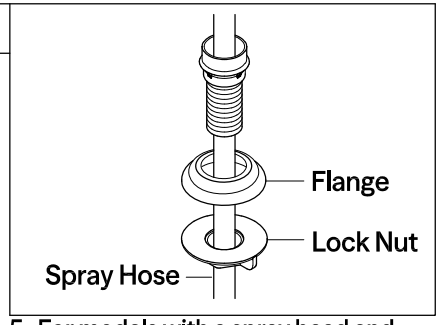

5. For models with a spray head and hose, insert the spray guide through the fourth hole in the sink, then screw the lock nut onto the shank and tighten it firmly.

6

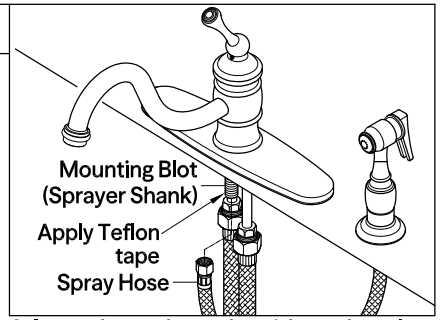

6. Insert hose through guide and apply Teflon tape to sprayer shank. Attach hose to sprayer shank.

7

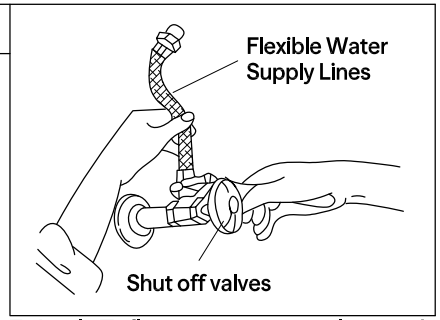

7. Apply Teflon tape on stop valves and attach supply lines, with the faucet closed turn on water supply and check for leaks.

8

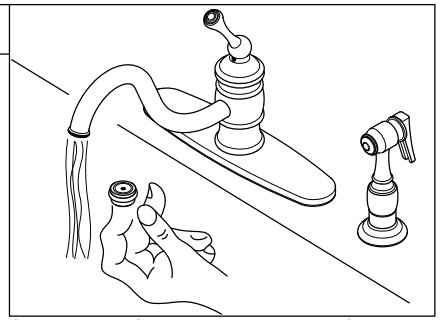

8. Remove the aerator, turn on the faucet, let water run for at least one minute, this will clear any debris left in the line, reinstall aerator.

9

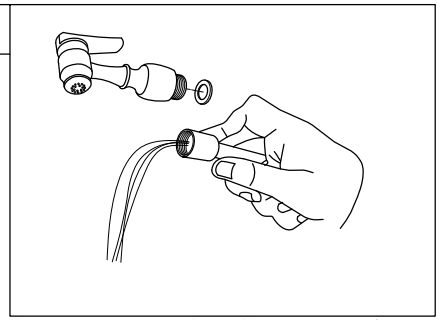

9. Remove spray head by unscrewing the sprayer in a counter clockwise direction, turn on both hot and cold valves and let water run for at least one minute, this will clear any debris left in the line.

Warning!!!

- Do not over-tighten nut during installation.
- Over-tighten may crack the valve and cause severe leak.

©2025 LVC Kingston LLC. All Rights Reserved.
2025-09-G