Console Sink

INSTALLATION INSTRUCTIONS

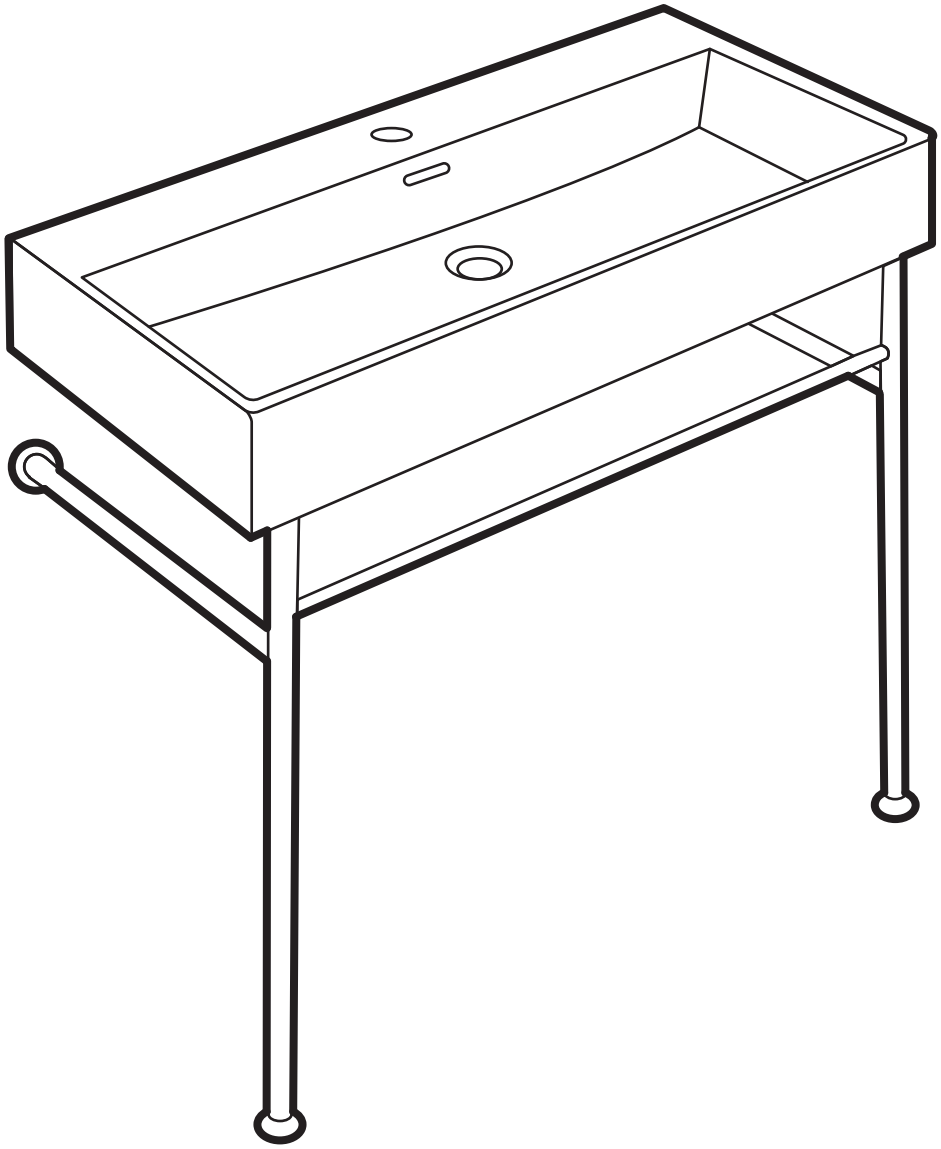

PRIOR TO INSTALLATION:

- Inspect product to ensure no damages have occurred while in shipping.
- Observe all plumbing and building codes in accordance with your state and local requirements.
- Floor must be level prior to installation.
- Console height is not adjustable.
- All dimensions are nominal! Be sure to measure your sink prior to installation.
- The step-by-step guidelines in the installation instructions are a general reference. Should there be any discrepancies, Swiss Madison cannot be held liable. It is recommended to install all Swiss Madison products by hiring a licensed professional.
- Read installation and maintenance instructions thoroughly before installing. Be sure to use proper tools and always wear proper personal safety accessories for your protection.
- Two people are recommended to handle and install this product as it is fragile.

QUESTIONS OR CONCERNS?

Please contact us:

1-434-623-4766

info@swissmadison.com

INCLUDED PARTS:

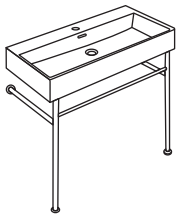

Console Sink & Legs

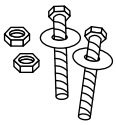

Bolts

SUGGESTED TOOLS & MATERIALS:

Safety Glasses

Drill

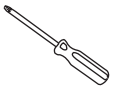

Screwdriver

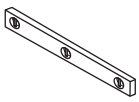

Level

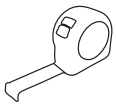

Tape Measure

Wrench

Caulk

SINK INSTALLATION:

1 Assemble Console

Using the provided hardware assemble the console as illustrated.
NOTE: Height of console is NOT adjustable.

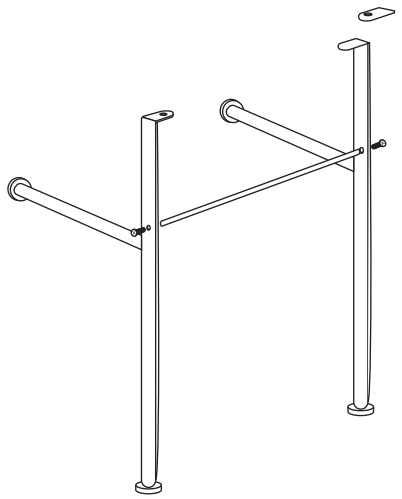

2 Install Sink

Use your assembled console to mark on the wall where the bottom of the sink should rest. Following the steps illustrated below, install your sink.
NOTE: Make sure your sink is LEVEL before marking and securing into place.

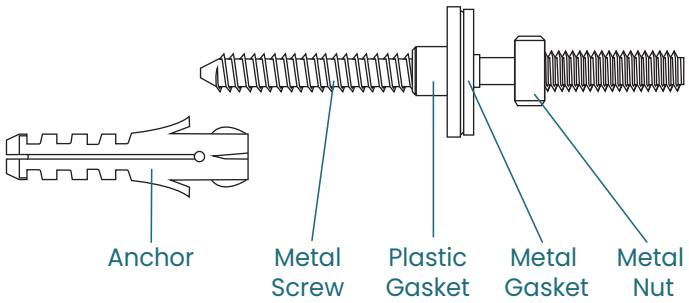

3 Drill two holes in the required position on the wall using a 14mm masonry drill bit, to a depth of 75mm.

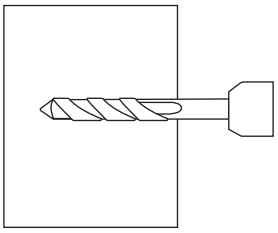

4 Push an anchor into each hole.

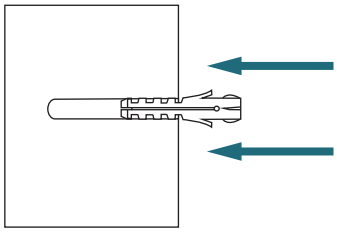

5 Screw a fixing bolt into each anchor using an 8mm spanner until the spanner contacts the wall.

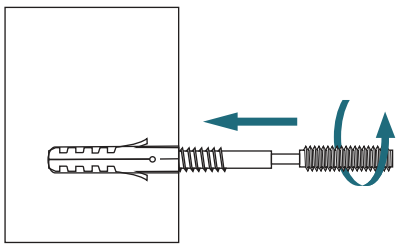

6 Place the basin in position against the wall. Locating the fixing bolts through the holes in the rear of the basin. Push a plastic washer followed by a metal washer, onto each fixing bolt.

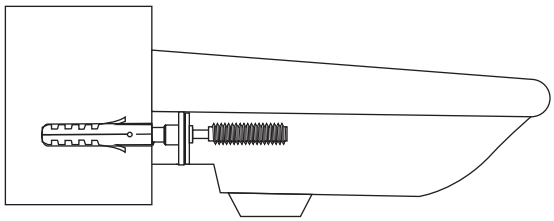

7 Screw a metal nut onto each fixing bolt to secure the basin.
Do not overtighten, as this may damage the ceramic.

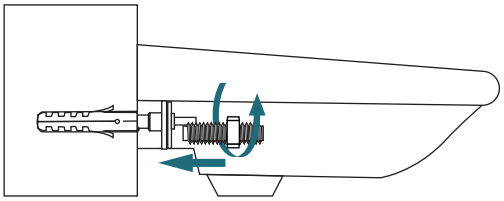

NOTE: These fixings are suitable for solid walls only. Plasterboard or stud walls may require specialist fixings (not supplied).

CAUTION: Take care when drilling walls and floors to avoid concealed wires or pipes.

8 Install Console

Secure your console underneath the sink and to the wall.
NOTE: Solder lug washer may need to be adjusted to properly align your console legs with the sink.

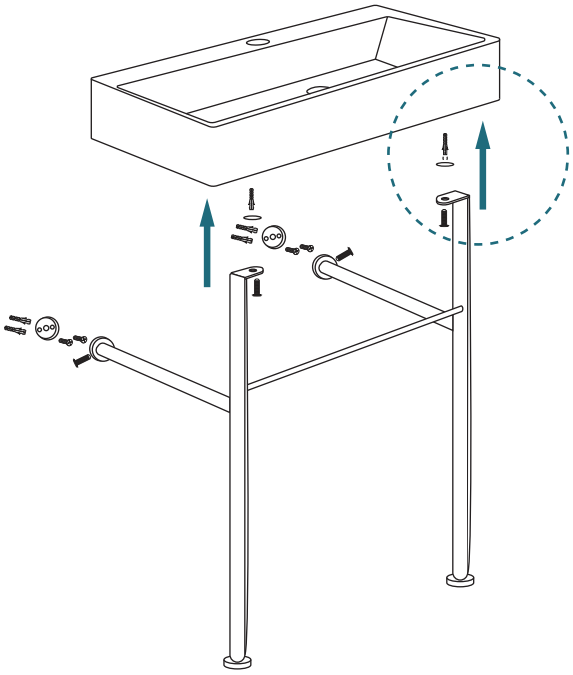

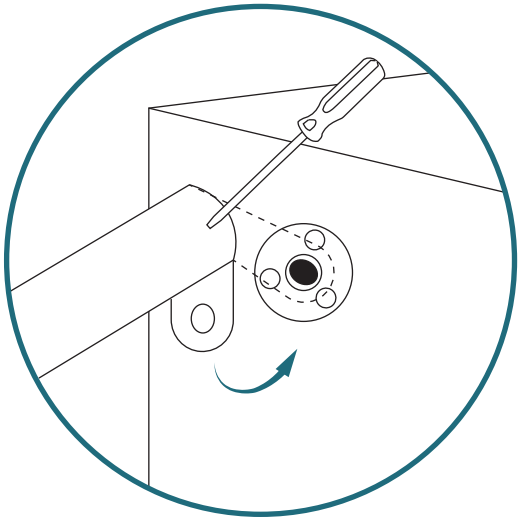

9 Seal Sink

Apply a bead of caulk around the back edge of the sink where it meets the wall.

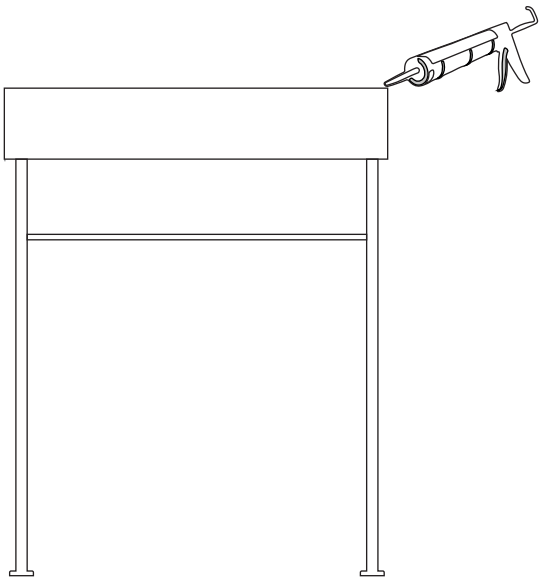

10 Install Plumbing Fixtures

Connect drain trap to drain, and water supply connections to faucet according to manufacturer's instruction. Run water into sink and check for leaks.

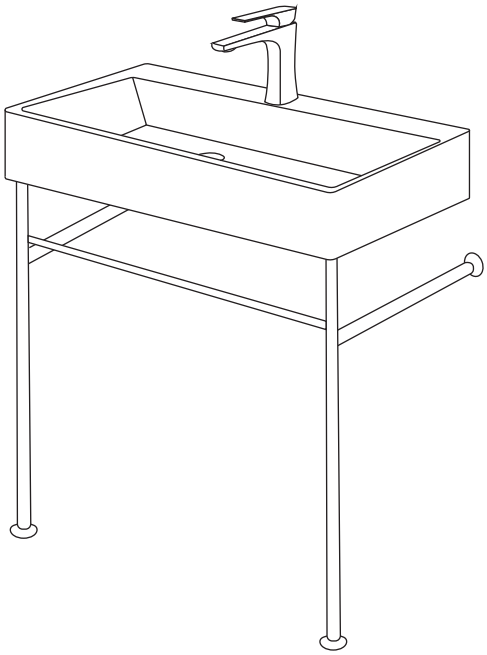

Console Sink

USE & CARE INSTRUCTIONS

SINK CARE AND MAINTENANCE

- Use water at a temperature between 32 ℃ and 140 ℃ to clean the sink. Directly poured boiled water may cause the ceramic body to crack.
- If there are stains left on the sink, rinse it immediately with clean water and wipe it with a clean cloth to prevent sink from damage.
- Prevent hard projects from directly impacting the surfaces of the product.
- Do not clean the ceramic products with steel brush or a scouring pad and the like, which may damage the ceramic surfaces.
- Do not use drastic or corrosive detergents to clean the sink, which may damage the surfaces of ceramic body.
- Use neutral detergents to clean sink once a week at least.

CONSOLE LEGS CARE AND MAINTENANCE

- The surface hardness is relatively high, but it can still be scratched by sharp objects. In daily use, try to avoid using steel wool balls, sharp knives, etc. To vigorously scratch its surface, so as not to damage the protective film on the surface and affect its aesthetics and corrosion resistance.
- Be careful when placing items to prevent other metal items or hard items from colliding and rubbing against stainless steel products.
- Avoid allowing stainless steel products to come into long-term contact with corrosive substances such as acids, alkali, and salts. If accidentally in contact, rinse thoroughly with clean water in a timely manner and dry it.

RUB LIGHTLY WITH SOFT CLOTH

CLEAN PERIODICALLY

CLEAN SINK WITH MILD ABRASIVE

HARSH CLEANERS

STEEL WOOL

LEAVING BLEACH ON FOR TOO LONG

ONE-YEAR LIMITED WARRANTY

Swiss Madison® products are made with quality materials and excellent craftsmanship to provide our customers with beautiful, durable, long-lasting products. Should there be any defects in materials or craftsmanship under regular use that are discovered within the first year after delivery, Swiss Madison® will provide replacement parts at no charge, or at its discretion, replace any product or part of the product that is deemed defective, under normal installation, use, service or maintenance. This warranty applies only to the original purchaser. Proof of purchase must be submitted with any warranty claim.

Swiss Madison® recommends that all installations of Swiss Madison® products be conducted by a licensed plumber or contractor. Swiss Madison® will not be held responsible for any damage or product failure due to improper installation, misuse, or failure to utilize a licensed plumber or contractor for installation. Swiss Madison® is not responsible for any installation or removal costs.

THIS ONE-YEAR LIMITED WARRANTY WILL BE VOIDED IF:

- The installation instructions were not followed by the installer
- The product has been moved from its initial place of installation
- The product has in any way been modified from its original condition
- The product has been subjected to improper maintenance, abuse, misuse, excessive use of chemicals, accidents, or other damages

Swiss Madison® makes no warranty that its products comply with any local building or plumbing codes. It is the consumer's responsibility and obligation to determine local code compliance prior to and during installation.

Swiss Madison® is not responsible for any special, incidental or consequential damages associated with the installation, replacement, return or use of the original purchaser's product. This includes, but is not limited to: freight costs, labor, travel time, lost profit, home damages and other contingent liabilities and costs (including, without limitation, costs associated with 'professionals' or 'experts', investigations, audits, analyses, attorneys and any other professional/hired services). Some states do not allow the exclusion or limitation of incidental or consequential damages, so the above limitation or exclusion may not apply to you.

The Swiss Madison® warranty is a comprehensive and explicit limit of liability. All other warranties are hereby disclaimed and waived.

QUESTIONS OR CONCERNS? Please contact us directly at: 1-434-MADISON (623-4766)

WARNING:

Contents of your order may contain sharp and possibly other harmful pieces and may cause hazard to children and adults. Swiss Madison® is not responsible in any way for personal injuries or damages.

⚠ WARNING

This product can expose you to lead, a chemical known to the State of California to cause cancer and reproductive harm.

For more information, visit:
www.P65Warnings.ca.gov